IFS Aviation Maintenance

User Guide

ICAM 26.2



Document Revision: 26.2-1

Publication Date: November 02, 2026

Contents

1 Getting started....33
User interface and navigation....33
Change your PIN Code....34
Using CAMO and finding information....35
My Alerts tab....35
Unassigned Alerts tab....36
Change the theme....37

2 Application administration....38
Modeling your organization....38
Organizations and organization hierarchies....43
Organizational structure for service providers....44
Modeling multiple repair organizations....45
Create sub-organizations....46
Locations....47
Location types....47
Administrative location types....48
Geographic and organization location types....48
Maintenance and repair location types....49
Location attributes for maintenance planning....50
Material storage location types....51
Shipping and receiving location types....52
Vendor location types....54
Other location types....54
Create locations....55
Create sub-locations....55
Set up location printers....56
Create a printer for a location....56
Set a default printer for a location....57
Location hierarchies....57
Represent an MRO in a hierarchy....59
Supply location....59
Designate a location as a supply location....61
Remote supplier location....62
Specify a remote supplier location....63

Prevent auto-reservation from remote supplier location..... 63
Inventory owners..... 63
Departments..... 65
Default functional department types..... 66
Default grouping department types..... 66
Create departments..... 67
Assign locations to departments..... 67
Assign users to departments..... 68
Authorities..... 68
Create authorities..... 70
Assign authorities to users..... 71
Assign one or more users to authorities..... 71
Assign inventory items to an authority..... 72
Measurements..... 73
User management..... 73
Create users and assign them roles..... 73
Identify roles that do not contribute to crew capacity..... 74
Lock user accounts..... 74
Set a user's primary organization..... 75

3 Engineering and technical records..... 76
Configuration management..... 76
Equipment baseline..... 76
Assemblies..... 77
Assembly classes..... 78
Configuration hierarchies for assemblies..... 80
Create a new aircraft or configuration assembly..... 84
Create a sub-assembly configuration slot on the assembly..... 84
Create a system config slot on the assembly..... 85
View a tracked configuration slot..... 86
Create a tracked configuration slot on an assembly..... 86
Software parts..... 88
Add software parts to a configuration slot on an assembly..... 89
Assembly List tab..... 90
Sensitive systems..... 90
Add sensitivities to a config slot..... 91
View the sensitivities associated with a config slot..... 91

Edit sensitivities on a config slot..... 92
Delete a config slot..... 92
Assign sensitivities to an assembly..... 93
Sensitive system warnings and aircraft capability levels..... 94
View sensitivity mappings to capability levels.....95
Part numbers and part groups.....95
Line and shop replaceable units.....96
Create part numbers..... 97
Create part groups..... 98
Create alternate parts..... 99
Assign parts to part groups..... 99
Create aircraft part numbers.....100
Reject part numbers and part obsolescence.....101
Delete part numbers..... 102
Configuration rules for part groups.....102
Part applicability..... 103
Part interchangeability.....105
Part and task incompatibilities..... 107
Add conditional part applicability details.....113
Edit part applicability and interchangeability.....114
Add incompatible part restrictions.....114
Add incompatible task rules.....115
Changing the inventory class of part numbers.....116
Promote batch-controlled parts to serial-controlled..... 117
Promote serial-controlled parts to tracked.....119
Demote Tracked Parts to Serial-Controlled..... 121
Demote serial-controlled parts to batch-controlled..... 122
Part group sensitivities.....125
Edit part group details.....126
Set up alternate purchasing units of measure on a part number..... 126
Aircraft capabilities..... 127
Assign or remove capabilities in aircraft assemblies.....128
Set up capability levels of aircraft.....128
Free text assembly capabilities.....129
Configuration baseline update management with Allowable Configuration..... 129
Usage management.....132
Usage parameters and usage definitions.....132

Create usage definitions and parameters....134
Specify order of usage parameters displayed....135
Configure format for entering and displaying usage hours....135
Updating usage parameters on inventory records....136
Calculated usage parameters....136
Define calculated usage parameters....137
Create assembly measurements....138
Assign and unassign measurements....139
Maintenance program management....139
Task definitions....139
Task definition types....141
Historical modification tasks....142
Task definition life cycle....143
View differences between two versions of a task definition....144
Job card definitions....144
Create a job card definition....146
Allowable HTML tags for large text fields....147
Revise a job card....149
Add technical references to a job card....149
Add attachments to a job card....150
Add labor requirements....151
Add part requirements to job cards....151
Add measurements to job cards....152
Add tool requirements....152
Add aircraft zones and panels....153
Add task steps to job card and executable requirement definitions....154
Select work condition settings....155
Assign job cards to a requirement....155
Activate a job card definition....156
Create open and close panel job card definitions....156
Add zones and panels to tasks....157
Add labor requirements....158
Add part requirements....158
Add measurements....159
Add tool requirements....159
Add task steps....160
Select work condition settings....160

Activate job card definitions..... 161
Fleet Task Labor Summary tab.....161
Requirement definitions.....162
Replacement requirements..... 164
Create replacement requirements.....166
Add job card definitions to replacement requirements.....167
Part transformation requirements.....168
Create part transformation (MOD) requirement definitions..... 168
Add part transformation information.....170
Add scheduling rules to modification requirements..... 171
Associate job card definitions to modification requirements..... 172
Create troubleshooting requirement definitions..... 172
Assign corrective actions to troubleshooting requirement definitions.....173
Activate requirement definitions..... 173
Create recurring requirements..... 174
Add aircraft weight and balance impact to requirements.....176
Generate the Weight & Balance Impact report manually.....178
Reference document definitions.....178
Create aircraft maintenance program reference documents..... 179
Disposition a reference document..... 180
Block definitions..... 180
Assigning requirements to block definitions.....182
Grouping requirements in a block chain.....182
Recurring requirements in block chains.....185
Create and edit blocks..... 186
Master panel card definitions.....187
Master panel card examples.....190
Create master panel card definitions..... 192
Revise master panel cards..... 192
Add zones to master panel card definitions.....193
Add panels to master panel card definitions.....193
Add technical references to master panel card definitions..... 193
Add an attachment to a master panel card definition..... 194
Activate master panel card definitions..... 194
View differences between master panel card revisions..... 195
Task definition revisions..... 195
Revise and activate task definitions..... 196

Compare two revisions of a task definition....196
Initialization....197
Initializing task definitions manually....198
Preventing manual initialization of requirements....199
On-condition task definitions....200
Initialize an on-condition task....201
Task applicability....201
Creating or canceling tasks on installation or removal....208
Modeling component maintenance....210
Component work packages and replacement tasks....211
How component work packages are created automatically....213
Component removal due to faults....217
Manual creation of component work packages and replacement tasks....218
Next shop visit tasks....218
Enforcing job card order in the workscope....219
Workscope Ordering for Repair Routing....219
Automatic Assignment of Tasks to Shop Locations....220
Tags....221
Create a new tag....222
Tag a task definition....222
Tag a block definition....222
Tag a requirement definition....223
Generate a tagged task definition report....223
Task dependencies and links....224
Task dependencies....224
Create New (CRT) dependency....225
Terminate Task (TERMINATE) dependency....227
Complete Task (COMPLETE) dependency....227
Post-Create (POSTCRT) dependency....228
Linked tasks....229
Link task definitions....230
Scheduling....231
Recurring requirements....231
Forecasting requirements....231
Determining the Scheduling Start Value....232
Add missing manufactured date or received date....234
Add missing effective date or initial usage value....235

Reschedule From values..... 235
Scheduling interval..... 236
Threshold, Initial and Repeat intervals..... 236
Schedule to Plan..... 236
Month and year intervals..... 237
Measurement-specific scheduling intervals..... 238
Part-specific scheduling interval..... 240
Tail number-specific scheduling interval..... 240
Manual scheduling..... 240
Hard and soft deadlines, deviation, and notification..... 242
Maintenance programs for aircraft and assemblies..... 243
Maintenance program revision numbers..... 247
Create a maintenance program..... 249
Assign requirements to a maintenance program..... 250
View a maintenance program..... 251
Change group code on a REQ or REF..... 251
Lock a maintenance program..... 251
Activate a maintenance program..... 252
Revise a maintenance program..... 252
Assign another operator to a maintenance program..... 253
Unassign requirements from maintenance programs..... 253
Unassign requirements from maintenance programs with multiple operators..... 254
Issue temporary revisions of requirements..... 255
Print maintenance program reports..... 256
Interactive Electronic Technical Manuals (IETMs)..... 256
Creating IETMs..... 257
Adding Technical References to IETMs..... 257
Adding Attachments To IETMs..... 260
Operators and applicability codes for IETMs..... 261
Baseline synchronization..... 261
Identification of inventory to be synchronized..... 262
Allow or prevent synchronization..... 265
Applying baseline synchronization..... 265
Canceling, terminating, updating and initializing tasks..... 266
Canceling tasks..... 266
Terminating tasks..... 267
Updating tasks..... 267

Initializing tasks..... 269
Updating the mapping between blocks and requirements..... 271
Updating mapping information examples..... 271
Unzip a requirement from a block..... 274
Unzip multiple requirements from a block..... 275
Zip a requirement into a block..... 276
Run a zip job for an aircraft or assembly..... 277
Life-limited parts..... 277
Create discard requirements for life-limited parts..... 278
Prorated life limits..... 279
Accumulated usage parameters..... 281
Create accumulated usage parameters..... 282
Set up prorated life limits..... 282
Create discard requirements for prorated LLPs..... 285
Add scheduling rules to discard requirements..... 286
AD/SB management..... 286
Receive and activate airworthiness directives..... 287
Create an airframe airworthiness directive..... 287
Create a sub-assembly airworthiness directive..... 288
Create a component airworthiness directive..... 289
Link a document as a technical reference..... 290
Add a document as an attachment..... 290
Disposition a reference document..... 290
Receive and activate service bulletins..... 291
Create an airframe service bulletin..... 291
Create a sub-assembly service bulletin..... 292
Create a component service bulletin..... 293
Link a document as a technical reference..... 294
Add a document as an attachment..... 294
Disposition a reference document..... 295
Create engineering orders for compliance..... 295
Linking compliance documents..... 296
Link a reference document to a requirement definition..... 297
Link a reference document to another reference document..... 298
Update compliance documents with new revisions..... 298
Duplicate an airworthiness directive or service bulletin..... 299
Edit an airworthiness directive or service bulletin..... 299

Remove a technical reference link or attachment..... 299
Link a document as a technical reference.....300
Add a document as an attachment..... 300
Link a revision to original airworthiness directive or service bulletin.....301
Disposition a reference document..... 301
Supersede compliance documents.....301
Link a revision to original airworthiness directive or service bulletin.....302
Disposition a reference document..... 302
Update airworthiness directives with amendments.....303
Create revisions for airworthiness directives..... 303
Link a document as a technical reference.....304
Add a document as an attachment..... 304
Disposition a reference document..... 304
Monitoring AD and SB compliance status.....305
View compliance report by reference document..... 306
View compliance report for inventory..... 307
Deferral references..... 307
Fault deferral workflow.....310
Search for a deferral reference..... 311
Create a deferral reference..... 311
Edit a deferral reference.....312
Mark a deferral reference as inactive.....313
Repair management.....313
Repair references.....314
Repair reference attributes..... 315
Create repair reference requirement definitions..... 316
Follow-on tasks..... 316
Duplicate follow-on tasks for multiple faults..... 317
Handling duplicate follow-on tasks..... 318
Create follow-on requirement definitions..... 319
Create follow-on tasks manually.....320
Fault definitions.....320
Create fault definitions..... 323
Troubleshooting tasks and corrective actions.....324
Failure effects and possible faults..... 325
Records management.....326
Recording flights.....326

Life cycle of a flight....327
Flight API....329
Flight measurement parameters....330
Create flight records....331
Edit flight records....333
Complete flights....334
Recording usage....334
Ways to record usage....335
Edit usage on historical flights....337
Create a usage record....337
Updating APU usage....338
Applying negative counts....338
Editing usage for assemblies and parent inventory....339
Edit inventory usage....339
Editing usage for single components....340
Recording historical maintenance....340
Record technical incidents and occurrences....342
Edit fault details....342
Record a work package that occurred in the past....343
Package and complete tasks done in the past....344
Performing record corrections....346
Adjust and correct task deadlines....346
Correct usage at the last task completion date....347
Correct usage at the effective date....348
Correct manufactured or received dates....348
Add deadlines to ad hoc tasks or faults....349
Inventory items and inventory records....350
Inventory classes....350
Creating and editing inventory records....354
Create an inventory record manually....355
Find and edit inventory....356
Edit inventory details....356
Edit sub-component details....357
Edit task lists for inventory items....357
Manufactured date and received date....358
Locking inventory....359
Lock and unlock inventory records....360

Archiving inventory....360
Unarchiving and reinducting inventory....361
Unarchive inventory....362
Reuse of records for received inventory....363
Inventory associations....365
Create inventory associations....366
Remove inventory records from an association....366
Changing the part number of inventory....367
Attaching and detaching inventory....367
Attach and detach components outside of tasks to correct configuration....367
Detach inventory items....368
Attach inventory items....369
Create and attach inventory....370
Backdating sub-component installations and removals....370
Reliability notes....371
Add a reliability note....372
Resolve a reliability note....373
View reliability notes for an inventory item....373
Search reliability notes by part number or config slot....373
Asset record coordination....374
Upload asset records....374
Setting up ARC Message Management....374
Configuration parameters....374
Permission settings....375
Coordinating asset records....378
Importing asset records....378
Review ARC upload history....378
Perform an ARC upload....379
Exporting asset records....379
Export an aircraft....380
Upload asset processing logic....380
Id sub-element and the inventory-id type....381
Current configuration element....382
Completed tasks element....384
Open faults element....385
Inventory usages element....387
Inventory details element....387

Mandatory elements....387
ID mandatory sub-elements....388
Aircraft details mandatory sub-elements....388
Current configuration mandatory elements....389
Completed tasks mandatory sub-elements....389
Open faults mandatory sub-elements....390
Inventory usage mandatory sub-elements....391
Inventory details mandatory sub-elements....392
Mapping elements to CAMO....392
Upload errors....397
Asset record coordination upload results....397
Asset record coordination message alerts....407
Purging ARC upload messages....408
Configuring the ARC message purging policy....408
Engineering assistance requests....409
Responding to requests for engineering assistance....409
Find requests for engineering assistance....409
Add information to tasks when engineering assistance requested....410
Sign off tasks after providing engineering assistance....412
Quick text....413
Create quick text entries....413
View quick text entries....414
Edit quick text entries....414
Delete quick text entries....414

4 Maintenance planning....416

Task deadlines and forecasting....416
Task deadlines....417
Due dates estimation for tasks with usage-based scheduling....418
Driving tasks and driving deadlines....420
Viewing due dates and recurrences of tasks....422
Sorting rules for the Due column....423
Deadline extensions....424
Plan By Date....424
Shifts and capacity patterns....425
Productivity factor....425
Planning types....425

Capacity summary 426
View capacity summary for stations 427
Long range planning 427
Before you begin 428
Launch Long Range Planner 428
Create long range plans 429
Add a work location 430
Add capabilities to a location 430
Add blocks and requirements to long range plans 431
Set yields and durations for blocks and requirements in long range plans 431
Run automation in the long range plan 432
Lock work packages 433
Move a work package from overflow 433
Modify the scheduled dates and location of a work package 434
Merging work packages (workflow) 434
Update and synchronize data 435
Coordinating work packages between LRP and Production 436
Generate long range planning content 436
Publish long range plans 438
Create what-if scenarios 439
Add future aircraft to your fleet list 439
Remove aircraft from your fleet list 440
Change the forecast model of an aircraft in your fleet list 440
Add an ad hoc aircraft work package to your plan 440
Add an ad hoc location work package to your plan 441
Compare two long range plans 441
Set up capacity patterns for a location 442
Create extraction rules for long range plans 444
Create a seasonal extraction rule 444
Create a weekly extraction schedule 445
Modify a weekly or seasonal extraction rule 445
Duplicate a weekly or seasonal extraction rule 446
Add and remove an extraction rule 446
Predicting maintenance deadlines with forecast models 446
Create a forecast model 447
Set a default forecast model 447
Assign a forecast model to an aircraft 447

View all aircraft assigned to a forecast model....447
Fleet List tab....448
Monitoring aircraft operating status....449
Capacity Pattern Setup tab....450
Planning Types tab....451
Shift Setup tab....451
Capacity Pattern Details page....452
Aircraft groups....453
Aircraft groups....453
Create aircraft groups....453
Add aircraft to aircraft groups....453
Delete aircraft groups....454
Use aircraft groups on the Fleet List and Fleet Due List....454
Planning viewer....455
Planning Viewer....455
Start Planning Viewer....457
Filter the Planning Viewer....457
View aircraft, flight, task, and work package details....458
Create a work package for an unassigned task....458
Create a work package in Planning Viewer....459
Reschedule a work package....459
Assign an unassigned task to a work package....460
Schedule an unscheduled work package to a flight....460
Line Planning Automation....460
What LPA schedules....462
Running LPA and viewing results....463
Exclude aircraft and work packages from LPA....464
Station Monitoring....465
Sort and filter in Station Monitoring....466
Raise faults from Station Monitoring....467
Create a blank work package from Station Monitoring....467
Create a service work package from Station Monitoring....468
Create a turn work package from Station Monitoring....468
Station Monitoring fault packaging rules....469
Package open faults from Station Monitoring....470

5 Maintenance execution....471

Work packages....471
Find a work package....474
Creating work packages....475
Create work packages for an aircraft or component....476
Create work packages for tasks or faults....476
Package open faults....477
Work on deferred faults opportunistically....477
Add tasks and faults to a work package....478
Unassign tasks and faults from a work package....479
Publish Work Package....479
Run the background job for line and heavy work package auto-publish....485
Complete Work Package....485
Work Package Loader....486
Work package loading and updating using a spreadsheet....486
Work package loading spreadsheet....487
Create work packages....491
Download the work package spreadsheet....492
Add requirement-based tasks to the work package spreadsheet....493
Add ad hoc tasks to the work package spreadsheet....494
Cancel tasks using the work package spreadsheet....495
Upload the work package from a spreadsheet....495
Edit task details....496
Scheduling and rescheduling work packages....497
Global material request status for a single task or fault....497
Review part availability....498
Schedule work packages to internal maintenance locations....498
Schedule work packages to external vendors....499
Reschedule work packages....500
Update location when aircraft is moved during in-progress work package....501
Change the end date of a work package....501
Delay the end date of a visit....502
Generate the workscope of a work package....502
Duplicate job card suppression....503
Completing job card that has suppressed duplicates....505
Removing tasks and job card suppression....505
Verifying to-be-executed job cards are removed....505
Verifying suppressed job cards are removed....506

Reserve and request all parts for a work package..... 506
Search for inventory.....508
Review part requests and tool requirements in work packages..... 509
Change the priority of a part request..... 509
Request tools..... 510
Rob parts.....511
Commit the workscope of a work package..... 512
Changing a committed workscope.....513
Cancel work packages.....514
Assign a work package to line crews.....515
Start work packages..... 515
Job card collection..... 516
Previewing releases..... 516
Preview a release..... 518
Evaluate aircraft completeness.....519
Aircraft capabilities..... 519
Viewing flight capability requirements.....520
Edit capability levels of aircraft..... 520
Turn checks and service checks..... 520
Turn and service check block definitions.....521
Turn and service work package names.....522
Scheduling line and work checks..... 524
Select turn and service check settings.....524
Create turn check work package manually..... 525
Completing work packages.....526
Complete a work package..... 527
Complete component work package as unserviceable..... 529
Complete Work Package report.....529
Work package management..... 530
Update job cards that have newer revisions..... 530
Move tasks and faults between work packages..... 531
Reassign tasks and faults.....531
Print task cards..... 532
Capacity planning.....533
Shift patterns..... 533
Create shift patterns.....533
Edit shift patterns..... 534

View crew details..... 534
Add a shift pattern to a crew..... 535
Remove a shift pattern from a crew..... 535
Assign tasks to crews..... 535
Crew Shift Day..... 536
Assign tasks to Crew Shift Days..... 536
Unassign a task from a Crew Shift Day..... 537
Temporary crew assignments..... 537
Temporarily assign a user to a crew..... 537
Edit temporary crew assignment..... 538
Remove temporary crew assignments..... 538
Filter Assigned to Your Crew tab..... 538
View upcoming crew assignments..... 538
View your upcoming schedule..... 539
Tally sheets..... 539
Print tally sheets..... 540
Edit tally sheet order..... 540
Print ordered tally sheets..... 541
Tasks..... 541
Find a task or fault..... 543
Create subtasks for faults..... 544
Claim tasks assigned to your crew..... 546
Ad hoc tasks..... 546
Create an ad hoc task from the fleet list..... 547
Create an ad hoc task for a work package..... 547
Create an ad hoc task from inventory details..... 548
Create an ad hoc installation task for missing components..... 549
Adding to tasks and faults..... 550
Part requirements..... 550
Add part requirements to tasks or faults - barcode..... 552
Add part requirements to tasks or faults - enhanced..... 553
Add part requirements to tasks or faults - legacy..... 555
Add part requirement using IPC document..... 556
Create a part and add it as a requirement for a task or fault..... 557
Add tool requirements to tasks or faults..... 557
Add technical references to tasks or faults..... 557
Add measurements to tasks or faults..... 558

Add labor requirements to tasks or faults....559
Edit labor requirements for a task or fault....559
Add job card steps to tasks or faults....559
Add instructions to tasks or faults....560
Add attachments to tasks or faults....560
Specify zones and panels for a task or fault....561
Recording work on tasks and faults....561
Start work on tasks....565
Installations and removals....565
Finish or stop work on a task or fault....566
Step skills on tasks and faults....569
Finish or stop work on tasks with step skills....570
Change job step applicability....570
Task certification and inspection....571
Certify completed work on tasks....572
Inspect work completed on tasks....572
Correct the details recorded for work done on tasks and faults....573
Batch complete tasks....574
Terminate recurring tasks....575
Handling work completed on the wrong task....576
Mark a task or fault as an error....579
Display of labor skill for MPC tasks....579
Oil consumption monitoring....580
Record oil consumption....583
Record oil uptake for flights....584
View the oil consumption report....584
Oil consumption report....584
Task supervision....586
Supervise a crew's assigned job cards....588
Job stop on behalf of a technician....588
Edit scheduled and actual hours on the Task Supervision tab....589
Unassign a technician from a labor row....590
Faults overview....591
Viewing and assessing faults....593
Review open logbook faults for aircraft....593
Review deferred logbook faults for aircraft....594
Review historical logbook faults for aircraft....594

View fault details....594
Evaluating faults....595
Mark faults as evaluated....596
Request engineering assistance for tasks and faults....596
Mark faults as no fault found....597
Cancel faults on inventory....597
Raising faults....598
Raise a logbook fault and leave it open....600
Raise a fault and request a part immediately....602
Raise a logbook fault and close it....603
Raise a logbook fault and defer it....605
Raising non-routine work and shop findings....606
Record non-routines during inspection or during other tasks....607
Record logbook faults from work packages....608
Damage records....611
Add a damage record to a fault....611
View damage records on a fault....612
Edit a damage record on a fault....612
Fault references....613
Approving reference requests....615
Change the reference on a reference authorization request....616
Approve deferral or repair reference requests....616
See reference authorization status....617
Find MOC authorization number for deferral reference....618
Deferring faults....618
Defer a fault....620
Find MOC authorization number for deferral reference....622
Defer scheduled maintenance....622
Phone up deferral....623
Defer a fault over the phone....627
Raise a fault over the phone....628
Repairing faults....628
Select reference for fault repair....630
Subtasks on faults....631
Create a fault subtask based on a job card task definition....631
Create a fault subtask based on a requirement....632
Create an ad hoc subtask on a fault....632

Create fault thresholds....633
Record flight disruptions....634
View flight disruptions....634

6 Production planning and control application....635
Clear the java cache before using a new release of PP&C....635
Start the Production Planning and Control (PP&C) application....636
Production plans and production templates basics....637
Create production plans for projects....637
Create production templates....639
Create reusable templates from existing production plans....640
The scope of work covered in templates....641
Add task definitions to the template....641
Remove task definitions from the template....642
Saving the changes made to a production plan....642
Save a copy of the production plan....642
Saving changes made to template....643
Save a copy of the template....643
Take and release control of production plans and templates....643
Release another user's control of a production plan or template....644
Refresh templates and refreshing task definition status....645
Remove obsolete task definitions from templates....646
Project phases and work areas....647
Create a single project phase....648
Create project phases in bulk....649
Create dependencies between project phases....650
Create a single work area....651
Create work areas in bulk....652
Assign tasks to phases and work areas....652
Set the expected duration and start of phases....654
Display the expected duration of phases....655
Technical and project milestones....655
Create milestones one at a time....656
Creating milestones in bulk....656
Add project milestones dependencies to phases and tasks....657
Add and sequence technical milestones....658
Place tasks between technical milestones....658

Rescheduling work packages: how it affects production plans..... 659
Specify task dependencies..... 659
Hangar capacity..... 660
Create work shifts..... 661
Create capacity patterns..... 662
Set up the nominal capacity of locations..... 663
Estimating non-routine work..... 664
Non-routine estimation tasks..... 665
Create planning types..... 665
Assign or change the planning type assigned to tasks..... 666
Non-routine phases..... 667
Specify the default non-routine phase for the plan or template..... 667
Specify the non-routine phase for a project phase..... 667
Specify the non-routine phase for a task..... 668
Generate non-routine estimates..... 668
Capture non-routine estimates for later comparison..... 669
Adjust and regenerate non-routine estimates..... 670
Filtering and finding tasks..... 671
Preset filters..... 671
Find tasks by name or barcode..... 672
Filtering the demand in production plans and templates..... 672
Filter tasks based on their deviation from the dates in a baseline snapshot..... 673
Filter capacity..... 674
Create preset filters..... 674
Save filter criteria as a preset filter..... 675
Modify preset filters..... 676
Modify the list of preset filters..... 677
Applying preset filters..... 678
See only tasks occurring in the next or past few days..... 678
Find tasks based on their materials availability..... 679
Find tasks based on discrepancy between planned and actuals..... 679
See only non-routine tasks..... 680
Show all paused tasks..... 680
Show tasks paused for a specific reason..... 681
Find the initiating task of a non-routine..... 681
Find the subtasks of a non-routine..... 682
Find the non-routine(s) raised during a specific task..... 682

See only tasks that are taking longer to complete than planned....683
Clear filters to see the entire plan or template....683
Filter Criteria dialog box options....684
Human resources filter....688
Apply a template to a production plan....688
Reapply a template to update master panel cards....689
Adjusting production plans and templates....690
Update nominal capacity....690
Synchronizing PP&C with changes made in CAMO....691
Synchronize crew assignment discrepancies....692
Synchronize task priority discrepancy....692
Task rescheduling....693
Reschedule tasks in the Gantt....693
Set specific start date for tasks....694
Set the earliest start date for tasks....695
Unpin tasks....695
Change the duration of tasks....696
Reschedule the non-routine estimation task....697
Adjust the duration of the non-routine estimation task....697
Task priority....697
Set task priority....698
Reschedule milestones....698
Capture baseline snapshots of plans....698
Shift planning....699
Update capacity with planned attendance....700
Assign tasks to crews....701
Addressing capacity shortages for the next shifts....702
Assess crew capacity for the next shifts....702
Publish production plans and access the daily status report....704
Print job cards for the next shift....705
Access task details....706
Updating production plans with task progress....707
Load task progress data from CAMO....708
Find ad hoc tasks added to work packages....709
Calculation of task completion percentage....709
Production plan monitoring features....710
Compare production plans against baseline snapshots....711

Review the estimated non-routine hours remaining in a plan 712
Non-Routine report 713
Delete production plan snapshots 714
Addressing bottlenecks and capacity issues 714
Compare demand and capacity 715
Display and hide the critical path 715
Remove tasks from the critical path 716
Scheduling to a different location 717
Export production plans for further analysis 717
Delete master production plans and templates 718
Quit the PP&C program 719
UI pages 719
Production Planning and Control Management page 719

7 Materials management 721

Demand management 721
Part requests 722
Needed By date 723
Auto-reservation 724
Auto-reservation and locations 725
Ignored locations 727
Specify ignored materials locations 728
Preferred materials locations 729
Specify preferred materials locations 730
Remove preferred materials locations 731
How part requests are ranked 731
How stealing works 732
Locked reservations 733
Inventory ranking criteria 734
How serialized inventory is reserved 734
How batch inventory is reserved 736
What actions trigger auto-reservation? 737
What inventory can be auto-reserved? 738
Part requests not fulfilled by auto-reservation 739
Manual part request fulfillment 740
View inventory availability details 741
Manual reservations 742

Reserve local inventory....742
Reserve remote inventory....742
Reserve on-order inventory....743
Reserve kit inventory....744
Update the delivery status of deferred fault part requests....744
Filter deferred fault part requests....745
Create purchase requests....746
Steal part reservations....746
Inventory issue....747
Issue inventory for a part request....751
Print issue tickets....752
Issue inventory without a part request....753
Undo the issue of inventory....753
Create ad hoc part requests....753
Link to historical turn-in....754
Mobile picking and delivery....754
Assign part request for picking....756
Pick inventory for assigned part request....758
Issue picked inventory....759
Shipment receipt....760
Receipt of excess batch inventory....760
Receive inventory shipments....761
Receive and store customer-supplied parts....762
Record the technical details of received inventory....763
Inspecting inventory....764
Inventory condition....765
RFB inventory condition....767
Serviceable inventory inspection....769
Inspect inventory as serviceable....771
Attach serviceability documents to received inventory....772
Unserviceable inventory inspection....772
Unserviceable work packages....773
Inspect inventory as unserviceable....774
Fail partial batch inventory inspections....775
Quarantine inventory....775
Kit inspection....776
Scrapping and condemning....776

Condemn inventory ... 777
Scrap inventory ... 778
Unscrap inventory ... 778
Repair routing ... 779
Customize your view of the Unserviceable Staging tab ... 780
Pre-draw management ... 781
Predrawing inventory ... 782
Predraw inventory electronically ... 782
Locate predraw inventory ... 783
Unassign users from predrawing inventory ... 783
Warehouse management ... 783
Warehouse model ... 783
Bins and bin levels ... 784
Create bin locations ... 786
Create bin levels ... 786
Define the route order for a bin ... 787
Bulk export and import of bin route order ... 787
Export bin route order ... 789
Import bin route order ... 789
Stock level management ... 790
Stock numbers ... 790
Create stock numbers ... 791
Find stock ... 792
Stock levels and lows ... 792
Supply location stock levels ... 794
Stock availability ... 795
Create stock levels for supply locations ... 797
Recalculate stock levels ... 798
Supply location stock lows ... 799
Stock low action SHIPREQ ... 800
Stock low action POREQ ... 800
Respond manually to stock lows ... 801
Create purchase requests manually ... 801
Create consignment requests manually ... 802
Warehouse stock levels ... 802
Supplier location ... 805
Assign a supplier to a warehouse ... 806

Set warehouse stock levels..... 806
Remove warehouse stock level..... 808
Responding to stock lows..... 808
Responding to stock highs..... 810
Maintaining stock levels..... 810
Stock distribution requests..... 811
Filter the Stock Distribution Requests tab..... 815
View stock distribution request details..... 816
Stock distribution request pick list..... 816
Generate a pick list for stock distribution requests..... 817
Pick items for stock distribution requests..... 818
Complete stock distribution requests..... 820
Cancel stock distribution requests..... 821
Bulk export and import of stock levels..... 822
Export stock levels from supply locations..... 824
Import stock levels to supply locations..... 825
Export stock levels from warehouse locations..... 825
Import stock levels to warehouse locations..... 826
Kits..... 827
Add parts to kits..... 827
Create kit inventory..... 828
Assemble kits..... 829
Edit kit definitions..... 829
Turn in kits and kit contents..... 830
Counting inventory..... 830
Using a mobile device for inventory counts..... 832
Record an unexpected part found..... 834
Cycle counting..... 834
ABC classification..... 835
Record a cycle count..... 838
Load basic inventory count results from a file..... 839
Load detailed inventory counting results from a file..... 839
Ad hoc counting..... 840
Record an ad hoc count..... 841
Addressing discrepancies..... 842
Request a recount..... 843
Update records based on recount results..... 844

Ignore cycle count discrepancies....844
Recounting for discrepancies....845
Record a recount....846
Bulk export and import of inventory counts....847
Export inventory for count....849
Import inventory count results....850
Export inventory for recount....851
Import inventory recount results....852
Put away inventory....853
Complete pending put-aways....855
Create put-aways....855
Record put-aways with Put Away Inventory button....856
Turn-ins....856
Turn in inventory....860
Cancel inventory turn-in....861
Mark inventory in need of repair....861
Assign repair locations to parts....861
Add shipping and storage information to parts....862
Storage maintenance....862
Find stored inventory that requires maintenance....863
Shelf life and shelf life expiry....864
Record the shelf life of parts....865
Materials shipments and transfers....865
Create shipments....865
Pick items for a shipment....866
Package parts for shipment....866
Print shipping forms....867
Move shipment items to the dock....867
Create waybill groups....867
Route shipments....868
Send shipments....868
Transfer inventory....869
Tools....869
Check out tools....871
Check in tools....872
Tool monitoring....873
Monitor expected return of tools....873

View check-in/out tool history....873
Find tools coming due for calibration....873
Transfer tools to maintenance locations....874

8 Procurement and finance....875
Orders....875
Auto-created orders....876
Find orders by purchase type....876
Change purchase contact for orders....877
Purchase orders....877
Create purchase orders for part requests....878
Create ad hoc purchase orders....878
Create purchase orders for stock requests....878
Monitor and resolve order exceptions....879
Edit and add to orders....880
Add parts to orders....880
Add non-part items to orders....881
Add taxes to orders....881
Add customs and shipping charges....881
Exchange orders....881
Create exchange orders for part requests....883
Create ad hoc exchange orders....884
Create exchange returns....884
Create exchange orders for unserviceable components....884
Consignment orders....885
Create consignment orders....885
Create consignment exchange orders....886
Borrow orders....886
Create borrow orders for part requests....887
Create ad hoc borrow orders....887
Monitor borrowed inventory....888
Repair orders....888
Create a repair order for unserviceable inventory....892
Add inventory line to repair order....893
Changing order types....894
Convert borrow orders to exchange orders....894
Convert borrow orders to purchase orders....895

Convert exchange orders to purchase orders..... 895
Exchanging unserviceable components.....895
Convert repair order line to exchange order line..... 896
Order authorization.....896
Request order authorization.....898
Override order authorization for AOG.....899
Authorize orders..... 899
Reject requests for order authorization..... 900
Re-open canceled or closed orders.....900
Issue orders.....900
Authorize and issue orders concurrently..... 901
Override authorization and issue order for AOG..... 901
Cancel orders..... 902
Invoices.....902
Invoice lines and order lines.....905
Create invoices.....906
Match invoices to orders.....907
Manually map miscellaneous lines on AeroBuy-created invoices..... 907
Coordinate between invoice and order agents to validate invoices.....908
Mark invoices for payment.....908
Managing vendors.....909
Create vendors.....909
Edit vendors..... 909
Assign vendors to organizations.....910
Add accounts to vendors..... 910
Add links to vendor websites.....910
Attach vendor certification documents..... 910
Assign airports to vendors..... 911
Add taxes to a vendor..... 911
Edit vendor taxes..... 912
Archive taxes.....913
Restore archived taxes..... 913
View history of tax modifications..... 913
Create charges.....913
Add charges to vendors.....914
Edit vendor charges..... 914
Add purchase vendor prices for parts..... 915

Add purchase vendors for parts ... 915
Vendor approval status ... 916
Approve vendors ... 916
Approve vendors with restrictions ... 917
Unapprove vendors ... 917
Create vendor reliability reports ... 918
Record exchange vendor information for parts ... 918
Add repair vendors for parts ... 919
Requests for vendor quotations ... 919
Request quotes from vendors ... 919
Edit requests for quotations ... 920
Receive quotes from vendors ... 921
Vendor repairs ... 922
Assign a repair vendor to a part ... 922
Add tasks or faults to a work package ... 923
Send components to vendor for repair ... 924
Accept return of an unserviceable component ... 925
Return inventory to vendors ... 925
Routing ship-or-shelf inventory ... 926
Scrapping inventory at vendor ... 927
Convert line to scrap ... 927
Validate scrap ... 929
Warranties ... 930
Warranty contracts ... 931
Create warranty contracts ... 931
Create component warranty contract ... 932
Edit warranty contracts ... 933
Activate warranty contracts ... 934
Assign warranties to inventory ... 934
Component warranty contract initialization ... 935
Initialize warranty contracts manually ... 935
Edit warranties ... 936
Extend component warranty contract ... 936
Expire warranties ... 936
Deactivate warranty contracts ... 937
Warranty evaluation ... 937
Evaluate warranties manually ... 938

Finance management 938
Financial coverage in CAMO 938
Financial accounts 939
Create financial accounts 941
Create financial sub-accounts 941
Edit financial account details 941
Close financial accounts 942
Re-open closed financial accounts 942
Issue/Charge to accounts 942
Tracking financial information for inventory 943
Financial classes and types 944
Changing financial class 946
Financial transactions 946
Financial status of inventory 951
Financial reports 952
Summary financial log report 952
Detailed Financial Log Report 953
Raised orders by account report 956
Rotable adjustment reports 958
Rotable Adjustment Purchases and Returns report 959
Rotable Adjustment Exchange and Repair Orders report 960
Rotable Adjustment Archive and Owner Change report 962
Rotable Adjustment Create, Scrap, and Adjust Quantity Transactions report 963
Rotable Adjustment Price Adjustment report 964
Create CAMO reports 966
Generate financial and invoicing reports 966
Refresh a report with the most recent data 967
Export report data 967

1

Getting started

User interface and navigation

The CAMO user interface consists of a set of web pages that are linked together to support predefined workflows, which usually start from a to-do list. CAMO also includes some applications, which you can access from within to-do list pages, that open in different browser tabs or screens, for example, Slot Planner and Production Planner (PP&C).

After signing in to CAMO, most users see a to-do list. Your to-do list is a page that contains the tab pages, buttons and menu items that you need to complete the activities that are relevant to your role in CAMO. For some roles, the page that appears after signing on contains tiles that you can click to access various CAMO pages. If you have more than one role in CAMO, you see the to-do list of your primary role. To access the to-do lists for your other roles, click the menu arrow beside the CAMO logo in the page header.

The different types of pages in CAMO are:

- To-do list tab pages that show information relevant to your responsibilities and items that require your attention.
- Search pages that you use to find specific information, for example an inventory record, a purchase order, or a maintenance task, or several items that share the same search criteria.
- Details pages, where you can access and modify information, such as the details about an aircraft, a part number, or a purchase order. You access details pages when you click a link on a to-do list tab or in the search results after performing a search.
- Action pages, where you add information to or change information in CAMO records. The name of action pages begin with a verb, for example, the Create Inventory page and the Edit Location page. Usually, you see an action after clicking a button above or on a to-do list tab, or in a details page.

You navigate through CAMO pages to complete workflows. As you progress through the pages, CAMO navigation options prevent you from getting lost. The following describes the navigation options:

Navigation options

To	Do this
Return to the previous page you visited.	On a search page, click Close. On a details page, click OK or click Close.
Save the changes you made on the page and return to the previous page you visited.	On the action page, click OK.
Discard any change you made on the page and return to the previous page you visited.	On the action page, click Cancel.
Return to your CAMO start page (your to-do list).	On a search, details, or action page, click the CAMO logo in the top left corner of the page.
Access the details page of an item in CAMO, such as a part number, an inventory item, or a part request.	On any page type, click the link to the item (a part number, the serial number of the inventory, the part request code).
Access an action page on which you can modify information.	On a to-do list tab or a details page, click an action button, for example, the Create Inventory button.

Also, you can open linked CAMO pages in additional tabs in your browser, or in separate browser windows, instead of replacing the current page; you do so by right-clicking the link to the additional page you want to open, and selecting the desired option in the menu.

Tip You can use your mouse to drag to select multiple check boxes in a list. Select the first check box, hold down the left mouse button, and then drag the mouse pointer over the check boxes you want to select.

Change your PIN Code

Some actions in the CAMO Module in IFS Cloud ask you to confirm your identity. For these actions, you enter your IFS Cloud PIN code, not your password. You set and change your PIN

code in the IFS Cloud interface, not in CAMO. A PIN code has exactly six digits and only numbers are permitted.

Steps

1. In the IFS Cloud user interface, open the Navigator menu.
2. Go to **My Administration** > **PIN Code**.
3. Click **Set PIN Code.**
4. Type and confirm your PIN code.
5. Click **OK**.

Using CAMO and finding information

If you do not see the to-do list tab, menu item, or button that you expect to see—or that the instructions in the help tell you to use—you might not have the permissions that are required to see these items. To-do list tabs, menu items, and buttons are accessible to users who have one or more role(s) in which the permissions are set. If you need to obtain additional to-do lists, menu items, or buttons, contact your CAMO administrator.

When you click Help in CAMO, you see a page that lists the activities that your primary role allows you to complete. If you have several roles, you can click a link on the help page to see all of the roles available in CAMO. Also, you can click the Contents tab in the help window to see all of the information provided in the help, or you can click the Search tab to find specific information.

My Alerts tab

The My Alerts tab displays all alerts assigned to the current user. Alerts that have been archived will not appear on this list.

The table of assigned alerts contains the following columns:

- Alert ID: A generated code number.
- Name: The name or type of alert.
- Status: The current status of the alert. Possible alert statuses include:
  - NEW means that the alert has not yet been reviewed.
  - ACK means that the alert has been acknowledged.
  - DISP means that the alert has been dispositioned.
- Priority: The alert priority. A priority of 0 is lowest. A priority of 1 or higher is considered critical.
- Alert Date: The date that the alert was issued.
- Acknowledged Date: The date that the alert was acknowledged.
- Dispositioned Date: The date that the alert was dispositioned.

- Message: A description of the alert.

Unassigned Alerts tab

The Unassigned Alerts tab displays all alerts sent to roles to which the current user belongs, but that are not assigned to any user.

The table of unassigned alerts contains the following columns:

Tab columns

Column Name	Description
Alert ID	A generated code number.
Name	The name or type of alert.
Status	The current status of the alert. Possible alert statuses include: • NEW means that the alert has not yet been reviewed. • ACK means that the alert has been acknowledged. • DISP means that the alert has been dispositioned.
Priority	The alert priority. A priority of 0 is lowest. A priority of 1 or higher is considered critical.
Alert Date	The date that the alert was issued.
Acknowledged Date	The date that the alert was acknowledged.
Dispositioned Date	The date that the alert was dispositioned.
Message	A description of the alert.

Change the theme

To change the look of your user interface, set the theme in your user preferences. If you are using CAMO with IFS Cloud, you might prefer the Aurena theme. You can change the theme at any time.

About this task

For more information on themes, see the *CAMO Administration Guide*.

Steps

1. From your main menu, click **Options** > **Preferences**.
2. Select a theme and click **OK**.

2

Application administration

Modeling your organization

To model your organization in CAMO you create various entities to represent the geographical and functional structure of your company, the different groups of users who will use CAMO, what each group of users is allowed to do, and associated third party companies.

The top-level entity is the default administrative organization (ADMIN organization type) that is automatically created when you first install CAMO. The ADMIN organization represents the top level of your company, the parent company, or the service provider.

Under the ADMIN organization, you might have sub-organizations to model divisions such as operators, and maintenance and repair organizations (MROs), departments, and crews. Creating sub-organizations in CAMO is optional. If you have a simple structure, with a single operator for example, using the default administrative organization to represent your organization might suffice. But if you need to group and segregate different parts of your organization, then you create sub-organizations.

After you decide on the organizations you want, you create the locations where inventory can be located and where people can work. Each location belongs to at least one organization. Organizations link different entities. Aircraft, maintenance programs, locations, users, labor skills, owners, task definitions and other entities are assigned to organizations.

You create the following geographical and functional entities in CAMO to provide the organizational framework for other entities that are part of the equipment and maintenance baselines, such as aircraft, assemblies, parts, task definitions, and maintenance programs.

Entities	Types	Description
Organizations	ADMIN Required	The default ADMIN organization is created automatically when you install CAMO. There can be only one ADMIN organization so when you create sub-organizations under the ADMIN, they must be different organization types.
	Company: Operator Optional	Represents companies or divisions that operate a fleet of aircraft. Create Operators as sub-organizations of the root ADMIN organization. Do not create an Operator under another Operator or under an MRO type sub-organization. Although CAMO doesn't prevent you from creating Operators or MROs as sub-organizations of Operators or MROs, system logic doesn't support this structure.
	Company: MRO Optional	Maintenance, repair and overhaul companies that perform aircraft maintenance activities. Create MROs as sub-organizations of the root ADMIN organization. Do not create an MRO type sub-organization under another MRO type or under an Operator type sub-organization.
	Other sub-organizations: Department Optional	Represents departments within Company or ADMIN type organizations. Examples include heavy maintenance, line maintenance, warehouse, or perhaps even a fleet type, such as Boeing 767 or Airbus 320. Create as a sub-organization of either of these: • ADMIN organization • Another sub-organization such as an Operator or MRO type.

Entities	Types	Description
	Other sub-organizations: Crew Optional	Represents groups of human resources that work together, and to whom tasks can be assigned. Create as a sub-organization of either of these: • ADMIN organization • Another sub-organization such as an Operator type.
Authorities Optional	N/A	Used to restrict access to the following potentially sensitive information: • Assemblies and their task definitions • Forecast models • Inventory records CAMO users can access this information if they share the same authority as the corresponding item in the system.
Locations Required	Broadly summarized: • Administrative • Geographic and organization • Maintenance and repair • Shipping and receiving • Material storage • Vendor • Other	A physical location where inventory can be stored or people can work. Each location can have departments assigned to it, as well as capabilities (the type of work that can be performed at the location) and capacity (the speed at which work can be performed). Locations can be subdivided into sublocations. Every location must belong to at least one organization (except VENDOR type locations). When you create locations, you assign organizations to them. Locations can have zero, one, or multiple departments. When you create locations, you assign departments to them.

Entities	Types	Description
Departments Optional	• Administration • Control • Crew • Engineering • Maintenance • Marketing • Shipping and receiving • Supply • Tech pubs	Departments (and indirectly, locations) determine which of the data records users see in their to-do lists tabs, for example, specific inventory records, task definitions, assembly definitions, tasks, and maintenance programs. Departments are the link between users and locations.
Users Required		Every CAMO user requires a user account and must belong to at least one organization. When a user belongs to multiple organizations, you identify the user's primary organization. As part of the model, you create the following entities that are assigned to users (and organizations): • Roles • Labor skills • Shifts and schedules • Approval levels • Licenses

Entities	Types	Description
Owners Required	Broadly summarized: • Locally owned • Exchange • Consignment	Represents inventory owners. Each item of inventory has an owner. Ownership, along with the financial class of the inventory and the ownership type determines what financial transactions are recorded during the life cycle of an item. If you create inventory manually, you can select the owner. Otherwise, when inventory is received and CAMO creates a record for the item, the owner that's assigned depends on the default owner that's set in the database and on the type of order the item is received for. Depending on your configuration, there can multiple owners in the system. When you create an owner, you assign an organization to the owner.
Vendors		External providers of parts or services. When you create a vendor it is assigned the default organization or if your system includes multiple organizations that use different vendors, you can assign an organization to a vendor. When you a create vendor, a vendor location (type VENDOR) is automatically created. This enables you to ship inventory in CAMO to and from the vendor location. These automatically created VENDOR locations are not assigned organizations, but you can do this manually. When you create a vendor, an owner, which is the vendor is created.
Financial accounts Required	Broadly summarized: • Group • Asset • Equity/expense • Liability	

Organizations and organization hierarchies

Organizations and sub-organizations are top-level entities that represent the structure of your organization.

When you first install CAMO, a default organization is created automatically. This default organization is the administrative organization, and has the ADMIN organization type. The default organization represents the top level of your company, the parent company, or the service provider.

Under the ADMIN organization, you can create organizations to represent divisions of your company and other sub-organizations to represent departments and crews. Creating sub-organizations under the ADMIN organization is optional. If you have a relatively simple structure, using the default administrative organization to represent the company might suffice. But if you need to group together locations, users, and assembly configurations - and segregate groupings from each other, you create sub-organizations.

You might create sub-organizations to represent different divisions of one company, such as fleet operations or repair and maintenance. You can also use organizations to represent different companies that share the same CAMO system. Companies might share a CAMO system because they all belong to the same parent company, or because they each use the maintenance management services provided by another company.

You can create the following types of sub-organizations:

MRO

Maintenance, repair and overhaul companies that perform aircraft maintenance activities. MRO organizations must be nested immediately below the administrative organization.

Operator

Airlines that are responsible for a fleet of aircraft. Operator organizations must be nested immediately below the administrative organization.

Crew

A group of people with particular skills who carry out a particular type of work.

Department

A distinct area of your operations, such as a fleet, supply organization, or maintenance area.

Organization hierarchies provide basic filtering for users. In the diagram below for example, a user who belongs to the sub-organization Southbound Air sees only the departments, crew, and users below Southbound Air. Also, when adding required skills to a maintenance task, users that belong only to the Southbound Air organization, can select only those skills that belong to Southbound Air.

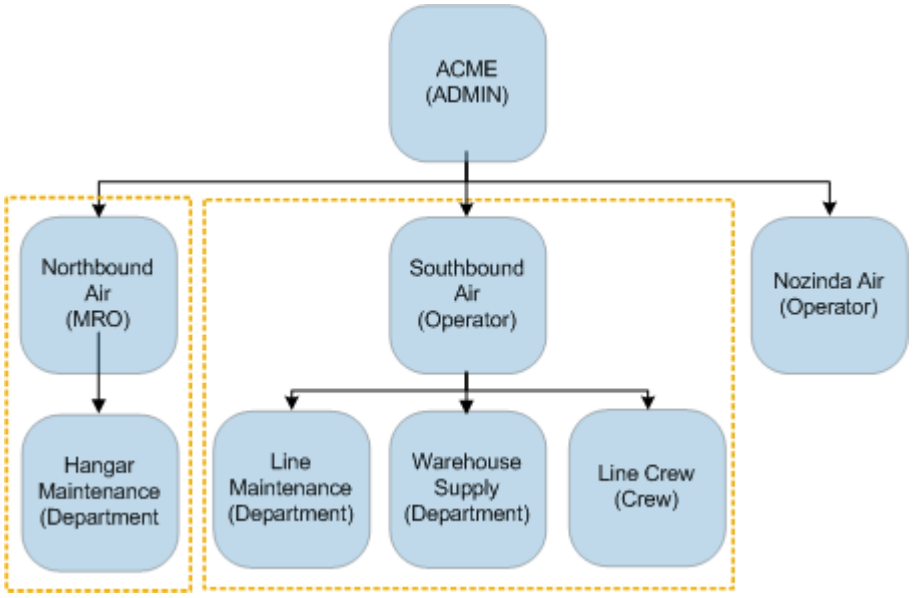

Organization hierarchy

Primary organization for users

Every user you create in CAMO must belong to at least one organization. When a user belongs to several organizations, you identify the user's primary organization. The primary organization is then automatically added as the user's organization to orders that the user creates. At any time, administrators can change the organizations associated with a user and can change the user's primary organization. To remove a user from a primary organization, you must first designate another organization as the user's primary organization.

Externally-controlled option for operators

If your organization performs maintenance work on the aircraft of operators who supply the parts required for the work, you create that operator as an organization of type Operator and select the Externally Controlled check box. The externally-controlled option indicates that some or all of the parts needed to perform maintenance on the aircraft are supplied by the operator, not your organization.

Organizational structure for service providers

If your organization is a service provider, and you share your CAMO system with the operators and MROs who obtain parts from your organization, you can set up the organizational structure within CAMO as follows:

- Use the default organization, the ADMIN organization that is created automatically in CAMO, to represent the service provider.

- Create sub-organizations of the Operator and MRO type to represent the client organizations that obtain some or all of the inventory they need from your organization.
- Optionally, if you want users in different organizations to have access some commonly used features, but not all the features in the ADMIN organization, you can create a separate "common" organization.

In a service provider environment, you can set up CAMO to allow procurement personnel to select the operator or MRO sub-organization as the receipt organization on orders, so that the client organizations receive and inspect inventory procured by the service provider on their behalf. To do so, you must ensure that each operator and MRO sub-organization is associated with only one owner of inventory in CAMO. All other owners you require in the system, but that are not used to identify the operators and MROs as inventory owners, can all be associated with the service provider organization— the ADMIN organization.

You can configure CAMO so that users who are not in the service provider organization can see only the cost information for the inventory purchased by their own organization. They do not see the cost information for inventory that is purchased on their behalf by the service provider organization. See "Restricting Access to Inventory Cost" in the CAMO Administration Guide.

Modeling multiple repair organizations

If several repair organizations share your CAMO system, you can set each one up as an organization of type MRO within the system. Users who belong to each repair organization use CAMO according to their role to create task definitions, create tasks, raise fault, execute and complete maintenance tasks, and more.

In CAMO, you can create user skills—which are used to identify the maintenance personnel with specific skills, such as avionics or welding, and specify labor skills that are required to complete tasks on assets. Skills are associated with organizations in CAMO. To create skills and make them accessible to users of all repair organizations in the system, a user from the default ADMIN organization creates the skills and assigns them to all repair organizations in the system.

However, to accommodate the needs of some organizations with multiple repair organizations, you can assign each skill to one ore more repair organization(s) that possess the skill. This lets you do the following:

- Use the skill terminology that is most familiar to personnel in each repair organization—create two skills that essentially are the same, but that are name differently in two repair organizations.
- Make adjustments that are specific only to one organization that has that skill; specifically, you can adjust the estimated hourly cost of the skill per organization, and whether users with the skill must use electronic signatures to sign off tasks in CAMO. This means you can assign the same skill to two repair organizations, but specify a different hourly cost, and requirement for electronic signatures, to each one.

In CAMO systems in which user skills are organization-specific—not all skills are assigned to all repair organizations—the use of organization-specific skills has the following effects:

- A CAMO administrator assigning skills to another user account can only select from the skills that are assigned to the organization(s) assigned to the user.
- A user selecting labor skills to add to a task definition in CAMO can only select from the skills that are assigned to the organization associated with the task definition.
- A user doing any of the following can only select the skills that are assigned to the user's primary organization:
  - Selecting the specialized skill to assign to a crew department.
  - Adding skills to labor requirements in an ad hoc task.
  - Specifying the skill required for a fault.
  - Editing the labor skills in a capacity pattern in CAMO.
  - Selecting the non-routine skills to add to a planning type in CAMO.
  - Adding skills for non-routine estimation to job card definitions.
  - Selecting the skill required for a new sign-off requirement in a work package.

To manage skills in CAMO—create and edit skills, assign them to organizations, and unassign them from organizations—a CAMO user must have access to the Manage Skills menu item and the associated page.

Access to the Manage Skills menu item must be restricted to very few individuals who are knowledgeable about the repair organizations and their skills, and about the effect changing skill assignments in CAMO has on users of CAMO within these organizations. In a multiple repair organizations system with organization-specific skills, it might be advisable to restrict access to the Manage Skills menu item to only a few users within the default ADMIN organization.

Create sub-organizations

Steps

1. From the **References** menu, select **My User Details**.
2. On the **User Details** page, **Organizations** tab, click the name of the **ADMIN** organization.
3. On the **Organization** page, **Sub-Organizations** tab, from the **Create sub organization of type** drop down list, select an option.
4. Click **Create**.
5. On the **Create Organization** page, provide the requested information and click **OK**.

Locations

Location types

Locations are used to represent where the pieces of inventory—an aircraft, an engine, or a part—or tools can be situated during their lifetime, and where maintenance work is performed.

Some location types represent places where inventory can be stored, for example a storage bin in the warehouse or a pre-draw location.

Other location types represent places where work can be scheduled, for example a track or line maintenance location.

There are also location types that don't represent a specific physical place, but a general place related to the state of an inventory item. For example:

- An aircraft in flight.
- Inventory in transit between locations.
- Inventory that was scrapped or archived.

When you model your organization, you create a hierarchy of different location types. For example, areas or buildings within an airport are created as sub-locations; rooms or specialty areas within buildings are created as sub-locations to those buildings. Some locations are mandatory, others are required to use specific features or workflows, others are optional.

Location types

CAMO includes a variety of location types that you can use to model your organizational structure and function.

You can create the following types of locations:

- Administrative locations: Administrative locations are mandatory and are created automatically when you install CAMO. You can have only one location of each administrative type. These location types do not represent a physical place, but states of inventory.
- Geographic and organization locations: Geographic and organization locations represent geographic areas where your organization has operations, the different airports where your organization has operations, and different companies or divisions that share the same CAMO system.
- Maintenance and repair locations: Maintenance and repair locations identify areas where work is carried out on aircraft and components, where consumables are stored for current work, and buildings where several maintenance areas are located.
- Shipping and receiving locations: Shipping and receiving locations are areas where inventory is located temporarily before it is shipped or transferred, and after it is received but not yet routed to a maintenance location or longer-term storage location.
- Material storage locations: Material storage location types identify the different areas of warehouses used to store inventory.

- Vendor locations: Vendor location types represent the locations of third-party providers of parts and services. In CAMO, the vendor location and the financial concept of a vendor are the same. When you create a vendor, the vendor location is created automatically. If needed, you can also create sub-locations to represent maintenance locations within the vendor location.
- Other locations: Other locations represent inventory that is no longer within your location or a vendor location.

Administrative location types

Administrative locations are mandatory.

Administrative location types

Name	Code	Description
System	SYSTEM	There can be only one system location.
Archive	ARCHIVE	Holds the inventory records for inventory items that have been archived. All archived inventory records are held in a single location. It is possible to unarchive inventory records from this location.
Operation	OPS	Assigned to aircraft in flight, and to inventory being shipped between remote locations.
Scrap	SCRAP	A theoretical location that holds inventory records for inventory items that have been deemed permanently unserviceable or beyond repair, and that have been destroyed. It is possible to unscrap inventory records from this location.

Geographic and organization location types

Geographic and organization locations are not mandatory.

Geographical and organizational location types

Name	Code	Description
Region	REGION	Represents the areas of the world in which your organization operates.
Airport	AIRPORT	Identifies an airport.

Name	Code	Description
Company	COMPANY	Represents different operators, MROs, or company divisions that operate within the same airport and share the same CAMO system.

Maintenance and repair location types

Some types of maintenance and repair locations are mandatory.

Maintenance and repair location types

Name	Code	Mandatory	Description
Hangar	HGR	No	Grouping location for heavy maintenance tracks, or all tracks that are in one building. You can create as many hangar locations as needed.
Track	TRACK	Yes	Sub-locations of hangar locations. Track locations represent tracks where heavy maintenance work is performed. There must be one track location in CAMO for each physical track. This is one of the location types where a work package can be executed.
Line	LINE	Yes	Locations used for line maintenance. Organizations often create one line location per airport or per company. This is one of the location types where a work package can be executed.
Repair	REPAIR	No	Grouping location representing repair shops at each airport or in one building. You can create as many repair locations as needed.
Local Repair Shop	SHOP	No	An individual repair location within a repair shop. Generally, each repair shop is used for a different type of repair, such as hydraulics, avionics, electronics, or breakdown. Component work packages can be scheduled to this type of location. In an organization with multiple, specialized local shops, you can define the shop location as a triage location and schedule work packages there as the starting point. (Job cards are assigned to the child shop locations).

Name	Code	Mandatory	Description
Bench Stock	BNCHSTK	No	A bench stock location. Bench stock refers to inventory stored in the maintenance area, and is usually general-purpose inventory such as consumables and expendables.

Location attributes for maintenance planning

To support repair routers and maintenance planners in deciding where to schedule work, you can specify the type of work a maintenance or repair location can perform, as well as the overnight shift capacity, track capacity, minimum ground time, and line maintenance buffer for a locations.

The following location attributes are optional, but available when you create repair and maintenance locations:

Location attributes and locations they apply to

Location attribute	Applies to location type
Capability	Track, Line, Shop
Overnight capacity shift	Hangar, Line
Track Capacity	All maintenance and repair locations
Minimum ground time	Hangar, Line
Line maintenance buffer	Hangar, Line
Repairable part numbers	Repair, Shop

Capability

Identifies the type of work that can be performed at a location, for example electrical systems work, or APU work. A location can have multiple capabilities. Supply locations and the parent locations of Track, Line, and Shop locations display the capabilities available in all their sub-locations, if the capabilities were specified for the individual maintenance locations.

To specify a capability for a location, you assign a work type and select the assemblies for the work type. If a location can do a work type on any assembly, for example a shop can repair a serial-controlled part that can be installed on many different aircraft, you select Any Part as the assembly. If a location can perform a work type on several assemblies, but not on all of them, create a capability for each assembly.

Your organization can configure CAMO so that users can schedule maintenance work to a location only if the work type required, matches the location's capability. Location work types

are also used to automatically assign component tasks to suitable shop locations, and to automatically schedule turn and service checks to suitable line locations.

Overnight capacity shift

Shifts can be added, deleted, or edited by users who have access to the Shift Set Up tab. Typically some shifts are overnight and you can assign these to locations. The Overnight Capacity Shift is used by the Line Planning Automation (LPA) tool to automatically package and schedule line maintenance work during that shift. It is also used by the Capacity Summary tab to evaluate whether there is enough capacity to complete the line maintenance scheduled for that shift.

Track Capacity

The number of assets that can undergo maintenance simultaneously at a location.

Minimum ground time

The minimum number of hours between flights that a location requires to perform any maintenance.

Line maintenance buffer

The number of hours added to the duration of a maintenance visit to account for activities, other than the maintenance activities, that are required between two flights; for example, the unloading of passengers from the incoming flight, towing the aircraft, and loading the passengers into the outgoing flight.

Repairable part numbers

The specific part numbers that can be repaired at a location - useful information for repair routing.

Material storage location types

Materials storage locations are not mandatory.

Material storage location types

Name	Code	Description
Serviceable Stores	SRVSTORE	Represents a desk at the front of the warehouse where inventory to be used in future maintenance and inventory being routed for storage is deposited for put away. Inventory can also be issued from this location.
Unserviceable Stores	USSTORE	Represents a desk at the front of the warehouse where inventory that can no longer be used is deposited before being routed elsewhere.

Name	Code	Description
Store	STORE	Represents the organization of the warehouse. You can create as many store locations as you want, and also a hierarchy of store locations. The top level store locations can be used for buildings or sections, while lower level store locations can be used for sections, aisles, or shelves.
Bin	BIN	Represents the actual storage locations for inventory items.
Predraw Location	PREDRAW	Grouping location that contains one or more predraw bins. Predraw functionality is meant to be used in environments where hand-held devices are used to issue the inventory to maintenance personnel. Each supply location (an airport or company location) can have only one predraw location.
Predraw Bin	PREDRBIN	Sub-locations of a predraw location. Each predraw location can contain many predraw bins, which hold inventory and tools that have been gathered but not yet issued.
Consignment Pool	CSGNPOOL	Represents third-party locations used to temporarily store consigned inventory that is to be returned.

Related concepts

Warehouse model

Shipping and receiving location types

Some shipping and receiving locations are mandatory.

Shipping and receiving location types

Name	Code	Mandatory	Description
Shipping Receiving	SHIPRCV	No	Optional location type you can use to group all of the shipping and receiving sub-locations. You can have only one shipping receiving location per supply location.

Name	Code	Mandatory	Description
Dock	DOCK	Yes	The loading dock where inventory is shipped and received. Each airport location must have at least one dock location; this is its default dock. If the airport has multiple dock locations, one of them must be the default dock. Inventory shipped from or received at an airport goes through a dock location.
Receiving Dock	RECEIVE	No	A dock location used only for in-bound inventory. You can use the DOCK location type for all receiving dock locations, but using the RECEIVE type can help you to differentiate them from shipping docks. A receiving dock cannot be designated as the default dock.
Serviceable Staging	SRVSTG	Yes	Holds serviceable inventory that arrives at the dock and inventory that has been inspected as serviceable following a repair. You can have only one serviceable staging location for each supply location.
Unserviceable Staging	USSTG	Yes	Holds all unserviceable inventory that has been removed during maintenance, and unserviceable inventory that arrives at the dock. You can have only one unserviceable staging location for each supply location.
Quarantine	QUAR	Yes	Holds quarantined inventory.You can have only one quarantine location for each supply location.

Vendor location types

Vendor locations are not mandatory

Vendor location types

Name	Code	Description
Vendor	VENDOR	The top level of a vendor location. Vendors can have one or more locations in CAMO. Vendor location types operate as DOCK locations, as inventory can be shipped to and from a vendor. Vendor locations are automatically designated as supply locations.
Vendor Hangar	VENHGR	Used by the Long Range Planner application. Parent of the heavy maintenance tracks located at a vendor location.
Vendor Line	VENLINE	Used by the Long Range Planner application. Line maintenance location at the vendor location. This is one of the location types where a work package can be executed.
Vendor Track	VENTRK	Used by the Long Range Planner application. Heavy maintenance track at the vendor location where the work is performed. This is one of the location types where a check can be executed.

Other location types

Other locations are not mandatory.

Generic location types

Name	Code	Description
In Transit	INTRANS	Holds inventory that is currently being moved within one supply location.
Out Source	OUTSRCE	Holds inventory records for items that have left your CAMO system, for example, for an external overhaul.

Create locations

You can create locations to represent places where inventory is stored, where maintenance work is performed, or the state of inventory. For example, a location can be a warehouse bin, an airport, or in transit.

Steps

1. On the **Location Search** page, click **Create Location**.
2. On the **Create Location** page, provide the requested information and click **OK**.
3. (Optional) To add a capability (work type and assembly) to a track, line or shop location, on the **Location Details**, **Capability** tab, click **Assign Capability**, then select the **Work Type** and one or more assemblies. Click **OK**.

   > **Tip** To assign all assemblies to the location, select **Any Part**

4. (Optional) To specify any of the following, on the **Location Details**, click the edit button, select or enter values and then click **OK**.
   - Track capacity (maintenance or repair locations)
   - Minimum ground time (Hangar, Line)
   - Line maintenance buffer (Hangar, Line)
   - Overnight capacity shift (Hangar, Line)
5. (Optional) To specify Repairable part numbers at Repair or Shop locations, on the **Location Details**, **Repairable Parts** tab, click **Assign Part**. Click **OK**.

Create sub-locations

About this task

You can create sub-location of higher-level locations to organize your operations.

Steps

1. Click the down arrow next to the CAMO logo.
2. Select your role, then the **Location Search** menu item.
3. On the **Location Search** page, enter your search criteria and click **Search**.

   > **Tip** You can restrict your search to a specific type of locations, for example, search only for hangar locations, or restrict the search to all types of shop locations or maintenance locations.

4. On the **Locations Found** tab, click the location name.

5. On the **Location Details** page, **Sub Locations** tab, click **Create Sub Location**.
6. On the **Create Location** page, provide the required information. Note the following:
   - **Type**: Select the type of location you are creating.
   - **Organization**: Enter the code of the organization for this airport, or click to search.
7. Click **OK**.
8. On the **Edit Location** page, provide the information requested and click **OK**.

Set up location printers

About this task

You can assign one or more printers to each location. If you have more than one printer, you must set one as the default printer.

When a print job is initiated at a location that does not have a printer, CAMO looks for a printer at the parent location, and goes up the location hierarchy until it finds a printer. Because of this, you are not required to configure printers for all sub-locations.

You can configure each printer for a particular type of print job, such as printing job cards, issue tickets, or put away tickets. If you select a type of print job for which there is no default printer at a location, the system automatically makes the selected printer the default printer for that type of print job.

Steps

1. Click the down arrow next to the CAMO logo.
2. Select your role, then the **Location Search** menu item.
3. On the **Location Search** page, enter your search criteria and click **Search**.

> **Tip** You can restrict your search to a specific type of locations, for example, search only for hangar locations, or restrict the search to all types of shop locations or maintenance locations.

4. On the **Locations Found** tab, click the location name.

Related tasks

Print issue tickets

Create a printer for a location

Steps

1. On the **Location Details** page, **Details** tab, **Printer Information** area, click **Create Printer** .

2. On the **Create Printer** page, provide the required information. Note the following:
   - **Printer Type**: Select File to save items as Adobe Acrobat PDF files on the CAMO server hard disk. You can print the PDFs as required, or you can use a third-party software application to automatically print the task card PDFs. Select Physical Printer to print items directly.
   - **Printer Parm**: If you selected **File** as the **Printer Type**, enter the path of the file location where the PDFs are saved. If you selected **Physical Printer** as the **Printer Type**, enter the exact path of the printer in the `\\servername\printername` format.

Related tasks

Print issue tickets

Set a default printer for a location

Steps

1. On the **Location Details** page, **Details** tab, **Printer Information** area, select a printer.
2. Select the type of document you want to print:
   - **ISSUE_TX**: Issue ticket
   - **PAWAY_TX**: Putaway ticket
   - **TASK_CRD**: Job cards
3. Click **OK**.

Related tasks

Print issue tickets

Location hierarchies

You create a hierarchy of locations to link the various parts of your organization and enable the workflows that you use.

At the top of the location hierarchy, you can have an airport or a region with sub-locations underneath. You can then create further sub-locations to represent hangars, tracks, repair shops, and more. Some locations are mandatory and others are optional. See the location description topics for more information.

You can create more than one location hierarchy. You might want to do this if your organization spans several airports.

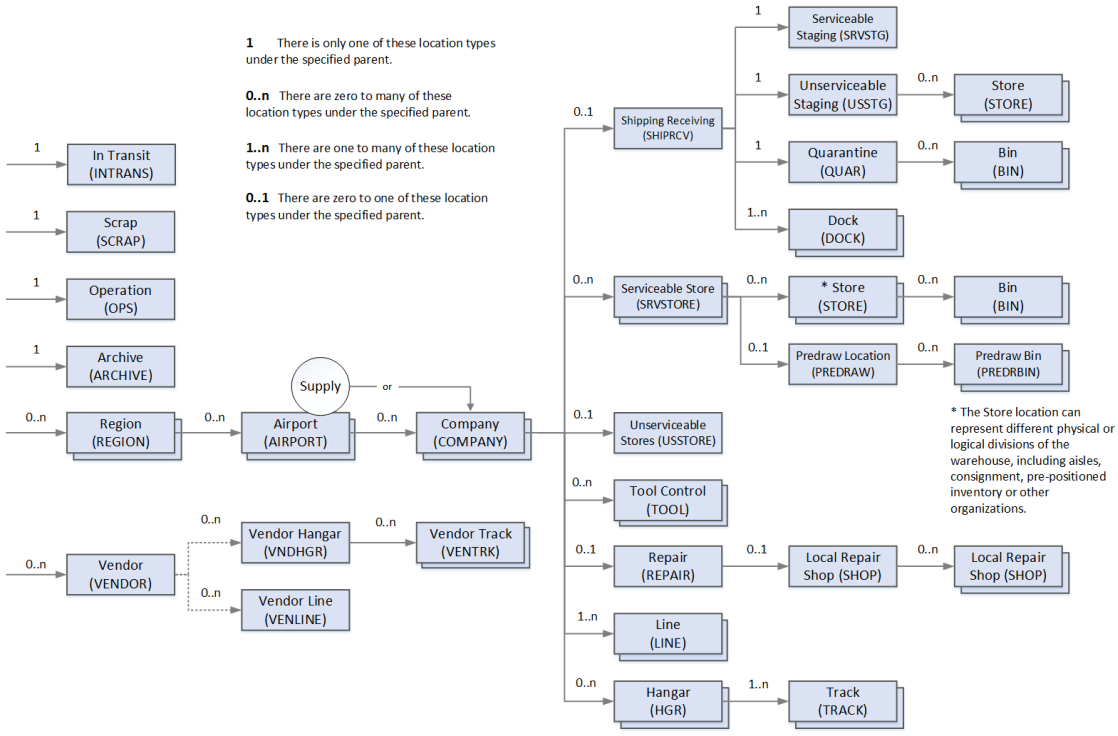

Example of a CAMO location hierarchy

In a CAMO location hierarchy:

- Only one location in a hierarchy can be marked as a Supply location—usually an Airport or a Company location. If the Airport is marked as a Supply location you might not need the optional Company location in your model. Alternatively, your model can include multiple parallel companies, each one marked as a Supply location, with independent hierarchies under them.
- Vendor (VENDOR) locations are associated with the Vendor Hangar (VENHGR) and Line (VENLINE) locations, but are not linked in parent-child relationships.
- The Vendor Hangar, Vendor Track, and Vendor Line locations are also used by the Long Range Planner (LRP) application. If you are outsourcing work and shipping materials to an MRO, you can create a location hierarchy to model this. See *Represent an MRO in a hierarchy*.
- Automatically issuing inventory items for outsourced maintenance can be controlled by enabling or disabling **Auto Issue Inventory** for Vendor Line and Vendor Track locations.
- Stores locations under Unserviceable Staging can be used to separate SoS parts or other categories of parts.
- To use auto-put-away, associate each part with a maximum of one bin (usually in Serviceable Stores). In organizations with multiple, specialized local repair shops: to route work to the shops your hierarchy includes the specialized shops as children of a parent SHOP location. Component work packages are scheduled to the parent level SHOP location.

Represent an MRO in a hierarchy

If you are outsourcing work and shipping materials to an MRO, you can create a location hierarchy to model this.

The Region structure is a common structure for both operators and MROs.

In the MRO location hierarchy, the Airport is always marked as the supply location. If the MRO is at the same physical airport as the operator, create an Airport location for the MRO that is different from the operator's Airport location.

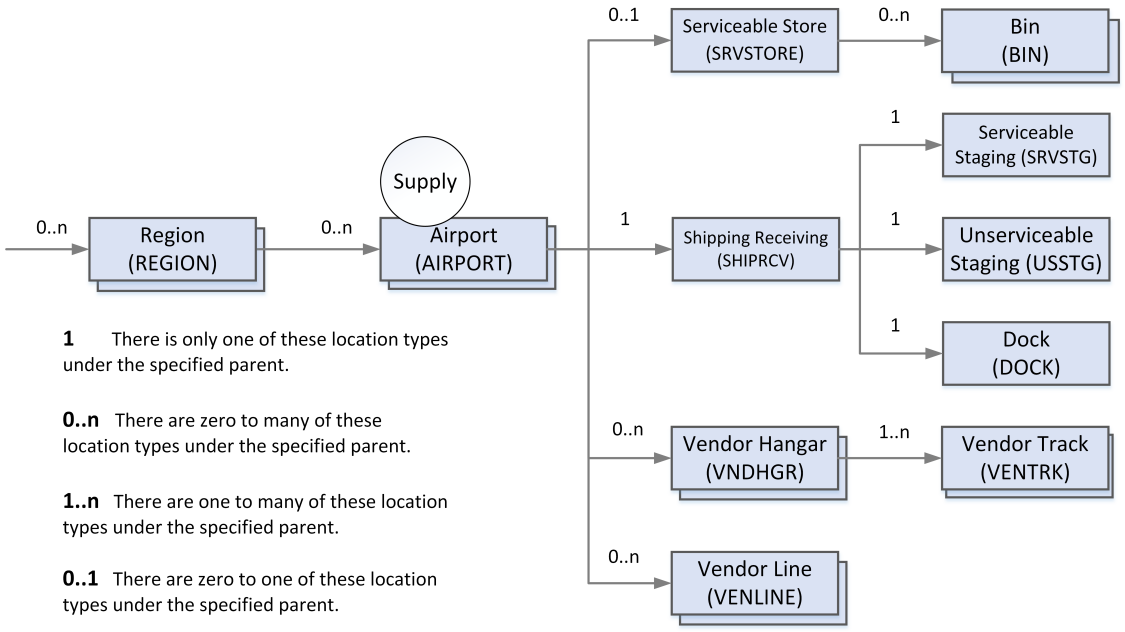

Model representing an MRO in a hierarchy

Supply location

Locations can be designated as supply locations. When you designate a location as a supply location, the location and its sub-locations are defined as local in relation to each other.

Supply locations are typically either airports or companies. The inventory within the supply location and its sub-locations is displayed on various tabs, such as To Be Shelved, Inbound Shipments, Turn In, Availability and more.

Note The inventory that users can see in To-Do List tabs is filtered according to the organizations and departments to which users belong, and the authority assigned to them and to the inventory. For example, when reserving remote inventory manually, material controllers can only see inventory in organizations that they belong to.

Location hierarchy and supply locations

- In the location hierarchy you cannot have a supply location under another supply location.
- Some location hierarchies are modeled with the airport as the supply location. Others are modeled with one or more companies under an airport. If the airport is marked as the supply location, then all locations under it in the hierarchy are local to each other. If your model uses companies, the companies are designated as supply locations and the locations under one company are local to each other. You cannot designate both a company and its parent airport as supply locations.
- To schedule maintenance work at a location, the maintenance location must be located under a supply location in the location hierarchy. There must be a valid work location also for activities, such as recording oil uptake, where CAMO runs a background process to package a task into an existing or new work package and complete the task or the work package. CAMO creates the task or work package at a work sub-location (such as LINE or TRACK) in the supply location where the aircraft is located. If the airport is not a supply location and if there are multiple companies designated as supply locations at the airport where the aircraft is located, then CAMO attempts to match the organizations that are associated with the company and with the aircraft operator to find the most suitable COMPANY supply location (and work sub-location) under which to create the work package. In a multiple-company scenario, CAMO uses the following logic to determine where to create the work package:
  1. Looks first for a COMPANY location that has a single operator organization that matches the aircraft's organization.
  2. Looks next for the last created COMPANY location that has an operator organization that matches the aircraft's organization.
  3. Looks last for any COMPANY location that has an organization, even if the organization doesn't match the aircraft's organization.
- Vendor locations that you create are automatically designated as supply locations.

See *Location hierarchies*.

Auto-reservation

- Auto-reservation reserves inventory within the supply location that generates the part request.
- If a supplier location is designated for the supply location, auto-reservation can reserve inventory or be prevented from reserving inventory from the remote supplier location.
- Within a supply location, you can prevent auto-reservation from reserving inventory from specified sub-locations.
- For maintenance locations, you can specify preferred materials locations within the supply location. If a supply location has preferred materials locations, you cannot delete the supply location or unmark it as a supply location unless you first remove the preferred materials locations.

Stock levels

- Stock levels can be set for supply locations and also for warehouse locations that are serviceable stores.

Inventory movement

- When you move inventory between sub-locations within the same supply location, you transfer it.
- When you move inventory between supply locations, you ship it.

Time zones

- Time zones can only be set on supply locations and all supply locations must be associated with a time zone.
- All sub-locations inherit the time zone of their parent supply location.
- Although you can see the time zone of any location, you can only edit the time if the location is a supply location.
- For more information, see the CAMO Administration Guide.

Related concepts

Remote supplier location
Auto-reservation and locations

Related tasks

Specify ignored materials locations
Create stock levels for supply locations
Set warehouse stock levels

Designate a location as a supply location

To create a relationship in which all locations below a particular location in the location hierarchy are local in relation to each other, mark the location as a supply location.

Prerequisite

- In the location hierarchy, no parent or child of the location is a supply location.

About this task

Use these steps when you create a new location or designate an existing location as a supply location.

Steps

On the **Location Details** page, click **Mark as Supply Location**.

On the **Location Details** page, **Details** area, the **Supply** check box is selected. You cannot edit this check box, but to reverse the supply location designation you can click **Unmark as Supply Location**.

Remote supplier location

For each supply location, such as an airport or company, you can designate another supply location as a *supplier* location. Inventory at the supplier location is remote, while inventory at the supply location is local.

For each supply location, you can specify one supplier location.

If a supplier location is specified and inventory is not available locally but is available remotely, then CAMO does the following:

- Auto-reservation reserves RFI-condition inventory that's available at the remote location. CAMO creates a shipment to send the inventory from the supplier location.
- If stock levels for the supply location are set up and the stock low action is SHIPREQ, CAMO creates a stock request with a remote reservation and creates a shipment to send inventory from the supplier location.

Depending where your supplier location is in relation to your supply location, it might be expensive to ship parts that are automatically reserved for part requests. If you want to replenish stock from the supplier location, but prevent remote auto-reservation for maintenance task part requests, you can select the Prevent Remote Auto-reservation check box on the supply location details page. See *Prevent auto-reservation from remote supplier location*.

If a supplier location is specified and a decision is later made to prevent auto-reservation from reserving from the supplier location, then reservations are broken for any inventory that was auto-reserved at the supplier location but that hasn't shipped.

If a remote reservation for a part request or a stock request is broken, the shipment line is deleted from the shipment and a history note is recorded. If the shipment line was the last or only line in the shipment, the shipment is canceled. (If you work from a paper list of shipments, you can search for the shipment by barcode).

Related concepts

Supply location

Auto-reservation and locations

Specify a remote supplier location

For a supply location, you can designate another location as a *supplier* location. CAMO can then auto-reserve inventory from the remote location and stock levels for the supply location can be replenished from the remote supplier when a stock low triggers a SHIPREQ.

Prerequisite

- The location must be a supply location.

About this task

If you only want to allow stock replenishment from the supplier location, you have the option to prevent remote auto-reservation from the supplier location.

Steps

1. On the **Location Details** page, in the **Details** area, click .
2. In the **Supplier Location** field, enter a location code or click to search and select a supplier.
3. (Optional) If appropriate, select the **Prevent Remote Auto-reservation** check box.
4. In the **Shipping Time** field, enter the number of days it takes to transport from the supplier location.

   You can enter whole days or partial days. For example, if you enter 1.5 this value is displayed as 1 d 12 h on the **Location Details** page.
5. Click **OK**.

Prevent auto-reservation from remote supplier location

If a supply location has a designated supplier location you can prevent auto-reservation from reserving inventory for maintenance task part requests from the remote supplier location.

Prerequisite

- The location must be marked as a supply location.

Steps

1. On the **Location Details** page, **Details** tab, **Details** area, click .
2. On the **Edit Location** page, select the **Prevent Remote Auto-Reservation** check box.
3. Click **OK**.

Inventory owners

Each inventory item in CAMO has an owner who is responsible for the maintenance and operation of the item. Ownership, along with the financial class of the inventory and the ownership type determines what financial transactions are recorded during the life cycle of an item.

Ownership types

The ownership type affects financial transactions, but also impacts what you can do with the inventory. If you search for inventory by owner, you can filter the search results by ownership type.

Onwership type	Description
LOCAL	Inventory is locally owned when the owner of the item is associated with an organization in CAMO. When inventory is locally owned, the ownership type is not displayed on the Inventory Details page. Financial transactions are recorded for locally owned inventory as a result of many events.
EXCHRCVD	Inventory was received on an exchange order. The record created in CAMO automatically has the EXCHRCVD type. The ownership changes from vendor to local after the item is inspected as serviceable and a return inventory is selected for the exchange order. The item can be issued only after the return inventory is selected.
EXCHRTRN	Inventory was or will be returned to a vendor via an exchange order. When inventory is selected for return to a vendor on an exchange order, its ownership type changes automatically when the replacement inventory is received and inspected as serviceable. The record for the returned inventory is archived in CAMO and you cannot change the owner. If the inventory is manually unarchived, CAMO automatically changes the ownership type to OTHER. (The type is not changed to OTHER when inventory is automatically reinducted).
BORROW	Vendor-owned serialized inventory is received on a borrow order, is installed, and the same item is later returned to its owner.
CSGNRCVD	Vendor-owned inventory was received on a consignment order or a consignment exchange order.
CSGNRTRN	Repairable inventory was returned to a vendor via a consignment exchange order.
OTHER	Inventory type is none of the other types. Inventory with this type might be pooled or loaned.

How inventory is assigned an owner

If you create inventory manually, you can select the owner. Otherwise, when inventory is received and CAMO creates a record for the item, the owner that's assigned depends on the default owner that's set in the database and on the type of order the item is received for.

Purchase orders: Inventory that you purchase becomes locally owned (has an ownership type of LOCAL) when it is received in CAMO in RFI condition or after the receiving inspection when its condition changes to RFI. In the case of consignment and borrowed inventory, items are held locally, but are owned by a vendor. (In an organizational structure that includes service providers/ MROs and operators, the owner of purchased inventory depends on the receipt organizations that are configured).

Exchange orders: You become the owner of newly received replacement parts after you've received and inspected an item as serviceable. When this inspection occurs, the ownership type of the inventory that's selected for return to the vendor automatically changes to EXCHRTRN and the vendor becomes the owner of the unserviceable part.

Related concepts

Financial coverage in CAMO

Departments

Departments are used to organize CAMO users into groups, and to link users to locations. You assign users and locations to departments.

In most cases, a department represents similar users at one location. For example, a line maintenance department might consist of line maintenance technicians and supervisors at one airport. If a user is assigned to a department, that user can also see information related to the department's location. For example, a purchasing agent assigned to a supply department at the Winnipeg location sees only the open purchase requests for Winnipeg.

The following figure shows an example of the relationship between locations, departments, users, and their roles.

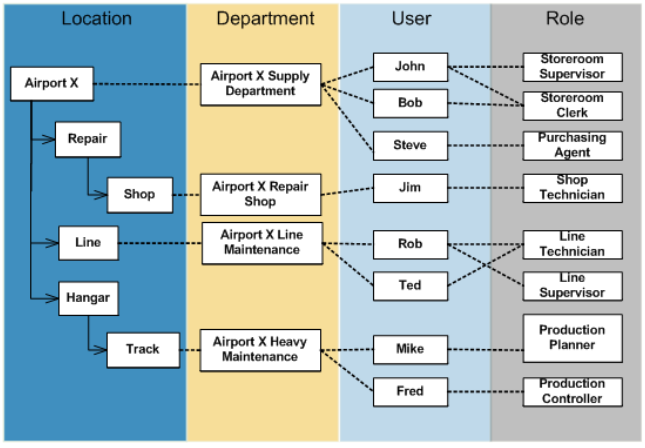

Relationship between locations, departments, users and roles

Default functional department types

By default, CAMO includes several department types that are used to carry out specific functions in CAMO.

Functional department types

Name	Code	Description
Crew	CREW	Crew departments are are used to assign work packages and tasks to a group of people rather than to one specific person. Members of a crew can view and take on the work assigned to the group.
Maintenance	MAINT	The maintenance department groups technicians who perform maintenance. You can have several maintenance departments representing the line, heavy, and shop maintenance departments. Users who carry out maintenance activities must belong to a maintenance department in order to be assigned maintenance tasks.
Engineering	ENG	The engineering department represents system engineers who support maintenance technicians. Similar to a crew department, members or the engineering department can view work assigned to the group.
Supply	SUPPLY	Supply departments represent those who supply parts to maintenance personnel. Only the members of a supply department can view and work on purchase orders, transfers, and shipments for the locations associated with the supply department. You should create a supply department for each supply location in your CAMO system.

Default grouping department types

By default, CAMO includes several department types that are used to group CAMO users.

Grouping department types

Name	Code	Description
Administration	ADMIN	The administration department groups people who do the same job, but are not covered by any other department type.

Name	Code	Description
Control	CONTROL	The control departments groups line controllers, fleet controllers, maintenance controllers, and so on.
Marketing	MKT	The marketing department groups marketing and sales personnel, especially those involved in setting flight plans.
Purchase	PURCHASE	The purchase department groups users who perform purchasing and procurement duties
Shipping/ Receiving	S/R	The shipping/receiving department groups users working at shipping and receiving locations, and who are responsible for all parts entering and leaving their location.
Technical Publications	TP	The technical publications department groups users who are responsible for updating records and manuals.
Other	OTHER	The other department groups users who do not fit into any other department type.

Create departments

About this task

You can create as many departments as required to effectively group users.

The department type selected grants the department functionality specific to the type.

Steps

1. On the **Department Search** page, click **Create Department**.
2. On the **Create Department** page, provide the requested information and click **OK**.

Assign locations to departments

About this task

You can assign a location to a department to link the department to the inventory at the location.

Steps

1. On the **Department Details** page, **Locations** tab, click **Assign Location**.
2. On the **Location Search** page, enter your search criteria and click **Search**.
3. From the search results, select a location and click **Assign Location**.

Assign users to departments

About this task

You can assign a user to a department to grant the user access to the department's location and records.

Steps

1. On the **Department Details** page, **Users** tab, click **Assign User**.
2. On the **User Search** page, enter your search criteria and click **Search**.
3. From the search results, select a user an click **Assign User**.

Authorities

In CAMO, you can use authorities to restrict access to potentially sensitive information in your CAMO system, allowing only a subset of users to see that information.

Specifically, you create and assign authorities to restrict access to the following:

- Assemblies and their associated task definitions

  Assemblies are templates that represent the different types of assets you have, and task definitions are the templates that provide details about the regular maintenance work that your organization performs on the assets.
- Forecast models

  Forecast models predict the usage accrual for assets. CAMO uses forecast models to estimate the due date of maintenance tasks that have usage-driven deadlines. Forecast models reveal potentially sensitive information about the usage of your aircraft.
- Inventory records

  Inventory records contain much information about inventory items such as the maintenance tasks that are due and on-going, the tasks that were completed on the items in the past, the faults found, the movement of the inventory, and more.

Users can access the information in CAMO if they share the same authority as the corresponding item in the system. For example, to restrict access to the task definitions for a specific model of engine, you create an authority, assign it to the engine assembly, and then assign the authority only to the users who work on that engine model, or even to a smaller subset of these users if needed. Other examples include limiting the number of users who can access the inventory records of all aircraft of a specific type—by assigning the authority to all tail numbers of that aircraft type, and to the users who should be able to access the inventory records—and restricting access to the records of locked or archived inventory items by creating and assigning authorities to inventory records that are locked or that are archived.

Users can belong to multiple authorities or no authorities, however inventory records, assemblies, and forecast models can belong to only one authority at a time. A user without any authority can see only the inventory records, assemblies, and forecast models that are also without an authority.

The following table provides details about how authority assignments affect whether a user can access certain inventory records.

Effect of Authorities on User Access to Inventory Records

Inventory Being Accessed	User Authority		Method Used To Access Inventory Record, and Outcome			Notes
	Matches Authority of Inventory?	Matches Authority of Parent Aircraft of Inventory?	Inventory Barcode Search	Clicking Link in Inventory Configuration Hierarchy	Fleet List To Do List*	
Aircraft	Yes	N/A	Granted	Granted	Granted	User has full access to the aircraft inventory record.
		N/A	Denied	Denied	Hidden	User has no access to the aircraft inventory record.
Installed component		Yes	Granted	Granted	N/A	User has full access to the component inventory record.
		Yes	Granted	Granted	N/A	User can access and edit the component inventory record because it is installed on a parent inventory for which the user has authority.

Inventory Being Accessed	User Authority		Method Used To Access Inventory Record, and Outcome			Notes
	Matches Authority of Inventory?	Matches Authority of Parent Aircraft of Inventory?	Inventory Barcode Search	Clicking Link in Inventory Configuration Hierarchy	Fleet List To Do List*	
	Yes		Denied	N/A	N/A	User cannot access the inventory record, despite having authority for it, because it is installed on a parent for which user does not have authority.
			Denied	N/A	N/A	User has no access to the inventory record of the installed component.
Off-wing component	Yes	N/A	Granted	Granted	N/A	User has full access to the component inventory record.
		N/A	Denied	Denied	N/A	User has no access to component inventory record.

The Fleet List to-do list tab in CAMO only lists aircraft inventory.

Administrative users who have the required permission setting can grant to other users access to all authorities, overriding the authorities assigned to these users. When a user is granted the All Authority option in CAMO, that user can access inventory records, assemblies, and forecast models regardless of their assigned authority.

Create authorities

About this task

You create authorities to restrict user access to some records in CAMO.

Steps

1. Select the **Authority Search** menu item.
2. On the **Authority Search** page, click **Create Authority**.
3. On the **Create Authority** page, enter a code and name for the new authority, and click **OK**.

What's next

After creating authorities, you can assign them to users and to different types of records, for example, inventory records, to determine which records each user can access.

Assign authorities to users

Assigning authorities to a user lets that user see the CAMO records, such as inventory records, that have the same authorities, but not records that have different authorities. This is a way to restrict access to records.

About this task

These instructions explain how to assign one authority at a time to a specified user. An alternative to this method is to assign one or more users to an authority.

Steps

1. To find the correct user, do the following:
   a) Select the **User Search** menu item.
   b) On the **User Search** page, enter your search criteria.
   c) On the **Users Found** tab, click the name of the user.
2. On the **User Details** page, click the **Authority** tab.
3. On the **Authority** tab, click **Assign Authority**.
4. On the **Authority Search** page, enter your search criteria to find the correct authority, or just click **Search** to see all authorities.
5. On the **Authorities Found** tab, select one authority and click **Assign Authority**.

Assign one or more users to authorities

About this task

Assigning users to an authority user lets these users see the CAMO records, such as inventory records, that have that authority, but not records that have other authorities. This is a way to restrict access to records. These instructions explain how to assign one or more users to a selected authority. An alternative to this method is to assign a specified user to authorities, one at a time.

Steps

1. Select the **Authority Search** menu item.

2. On the **Authority Search** page, enter your search criteria to find the correct authority and click **Search**.
3. On the **Authorities Found** tab, select the name of the authority.
4. On the **Authority Details** page, click the **Users** tab, and click the **Assign User** button.
5. On the **User Search** page, enter your search criteria to find the user(s) you want to assign to the authority, and click **Search**.
6. On the **Users Found** tab, select the users to assign, and click **Assign User**.
   The selected users are assigned and they are listed on the **Users** tab of the **Authority Details** page.

Assign inventory items to an authority

You assign inventory items to an authority so that only users who have the same authority assigned can see the inventory records in CAMO.

About this task

These instructions explain how to assign inventory items to a selected authority. An alternative method is to select an authority to assign while editing the inventory record.

> **Note** Authorities cannot be only assigned to sub-inventories. However, if you change or remove an authority from a parent inventory, the change is applied to the sub-inventories.

Steps

1. Select the **Authority Search** menu item.
2. On the **Authority Search** page, enter your search criteria to find the correct authority and click **Search**.
3. On the **Authorities Found** tab, select the name of the authority.
4. On the **Authority Details** page, click the **Inventory** tab, and click the **Assign Inventory** button.
5. On the **Inventory Search** page, enter your search criteria to find the inventory items you want to assign to the authority, and click **Search**.
6. On the **Inventory Found** tab, select the inventory items to assign, and click **Assign Inventory**.
7. On the **Assign Inventory** page, select an effective date, and click **OK**.
   The selected inventory items are assigned and they are listed on the **Inventory** tab of the **Authority Details** page.

Measurements

In CAMO, you can create a measurement to allow the maintenance technicians to record measurement values.

About this task

These instructions explain the generic work flow for creating measurements.

Steps

1. On the **Measurement Search** page, click **Create Measurement**.
2. On the **Create Measurement** page, provide the required information. Note the following:
   - **Code**: The code of the selected item.
   - **Engineering Unit**: Select the unit of measurement in which the finding is recorded.
   - **Precision**: The precision value indicates the number of decimal places that are stored when recording this measurement. Although the precision only affects numeric measurements, a precision value must be specified for all measurements.
   - **Domain Type**: Measurement data types let you record information like the number of passengers, the amount of oil consumed, or tire tread depth for tasks. For more information on the available domain types, see the *Flight measurement parameters* section.
   - **Review Required**: Marking this check box makes sure that the measurement is displayed on the Pending Reference Approvals page for approval by MOC.
3. Click **OK**.

User management

Create users and assign them roles

Each person who uses CAMO must have a CAMO user account. Users must be assigned at least one role so they can see to-do list tabs and perform actions that match their responsibilities.

About this task

When you first create a user account, the password for that account is a default password configured in your system. If you do not know the default password, ask your CAMO administrator.

A user can have multiple roles. The order of the roles determines the order of the menu items that appear on the user's to-do list. You can change the order of the roles for a user from the User Details page.

When you create users, you can add attachments, such as employment contracts.

Steps

1. Click the CAMO menu down arrow, then click **Administrator** > **User Search**.
2. On the **User Search** page, click **Create User**.

3. On the **Create User** page, provide the information requested, paying particular attention to the following fields, and click **OK**:
   - **Username**: The name the user enters to log on to the system. The user name must be unique in the system.
   - **HR Code**: This is a mandatory value that must be unique for every user.
4. On the **User Details** page, **Roles** tab, click **Assign Role**.
5. On the **Role Search** page, do any of the following:
   - Click **Search** to see a list of all roles in the system.
   - Enter the code in the **Role Code** field and click **Search**.
   - Enter the complete or partial name of the role in the name field and click **Search**.
6. On the **Roles Found** tab, select the roles you want to assign to the user, and click **Assign Role**.

   If a user is assigned multiple roles, you can reorder the roles by clicking **Edit Role Order**. The role order determines the order of the menu items on the user's to-do list. The first role to-do list appears when the user first logs in.

What's next

Give the new user the URL to access CAMO, the user name to use to log on, and the default password. Also, ask the users to change their password as soon as they log on to the system. Instructions are provided in the help.

Identify roles that do not contribute to crew capacity

Some roles exist on crews, but may not contribute to the crew's capacity for the purposes of labor planning. If this feature is enabled on your CAMO installation, roles contribute to crew capacity by default.

Steps

1. Open the **Role Details**.
2. On the **Role Details** page, **Details** area, click **Edit Role**.
3. Clear the check box next to **Contributes to Crew Capacity** and click **OK**.

This change applies to all users assigned to this role.

Lock user accounts

About this task

You lock a user account to prevent the user from logging on to CAMO and performing any actions in the system. You might lock a user account when you are about to make significant modifications to the user's details, or when a user no longer uses CAMO.

Steps

1. Click the down arrow next to the CAMO logo.
2. Select your role, then the **User Search** menu item.
3. Select the **User Search** menu item.
4. On the **User Search** page, enter the search criteria.
5. On the **Users Found** tab, click the name of the user.
6. On the **User Details** page, click **Lock User**.

If an account is locked, you can unlock it by clicking **Unlock User**.

Set a user's primary organization

When a user belongs to more than one organization, you must identify the user's primary organization. The primary organization is automatically added to orders that a user creates.

Steps

1. Select the **User Search** menu item.
2. On the **User Details** page, **Organizations** tab, select an organization and click **Mark As Primary**.

3

Engineering and technical records

Configuration management

Equipment baseline

The equipment baseline consists of templates that represent the various models of assets, such as aircraft and engines, for which you want to plan and track maintenance activities in CAMO.

In CAMO, you model these assets as assemblies, define their structure as hierarchies of systems and components, select the usage values and measurements to track for the inventory matching the assembly, specify the parts that are allowed in the assembly hierarchy, and set the details about the applicability and compatibility of parts.

Baseline data consists of collections of templates that are used repeatedly in CAMO. You create templates to represent different types and models of assets you have, and the maintenance work to be performed on these assets. Templates also include rules. For example, rules that govern which parts are allowed on specific assets and where they fit, and rules that dictate which maintenance tasks are required and when they should be performed.

Baseline data is essential for CAMO to create tasks that are relevant to the assets, to request parts that are compatible with the asset undergoing maintenance or repair, and to provide the traceability required to verify compliance with directives issued by equipment manufacturers or regulatory bodies.

The equipment baseline is one portion of the CAMO baseline. The complete baseline also includes the maintenance baseline, and the information about organizations, locations, and departments, which is sometimes referred to as the system baseline. Equipment baseline consists of the templates that define the following:

- The types of complex assets you have in your fleet. These are your assemblies.

- The structure of each type of complex asset—the functional systems and physical components that make up the asset. For each assembly, this is defined by creating the assembly hierarchy. The hierarchy consists of configuration slots, to which part groups are assigned.
- The parameters with which to measure and track the accrued usage of each assembly and subcomponent.
- The allowable configuration of each assembly, which identifies the components and parts that can be used on the assembly, where they fit in the assembly hierarchy, and what information should be recorded in CAMO throughout the life of these components and parts. The allowable configuration information is captured as part numbers organized in part groups.

Once the equipment baseline is defined, you use the templates to create inventory records that correspond to real physical assets that exist within your organization. Inventory items can be purchased, shipped, transferred, stored, issued, installed, removed, repaired and scrapped. At every stage, the rules that are set up in the equipment baseline guide how CAMO controls the inventory item. For example, if the baseline rules specify that when you receive a specific part, it must be inspected before being considered serviceable, CAMO automatically sets the condition of new inventory of that part to inspection required (INSPREQ). Other baseline rules specify incompatibilities between certain parts; CAMO prevents the installation of such a part on an asset when the incompatible part is already installed elsewhere on the same asset.

The equipment baseline templates are also associated with the maintenance programs and tasks that are relevant to the assembly. Maintenance programs and tasks are defined in the maintenance baseline.

For example, the equipment baseline template for an engine is associated with the maintenance plan for the engine, and for all of its components. The maintenance plan defines tasks such as inspections, corrective tasks, life-limited discards, and overhauls. This engine template is used to generate an inventory record for each actual engine of that kind that exists in the fleet. Each inventory record made from the template is assigned the serial number of the corresponding engine. The configuration of a specific engine is tracked under that engine's serial number. Information that is tracked includes the maintenance performed, the usage accrued, the individual parts that are installed on it, and those that were removed from it.

These inventory-specific details—serial number, maintenance performed, and so on—are unique for actual inventory items in CAMO.

Assemblies

An *assembly* represents a self-contained type of asset that performs a particular function. Examples of an assembly include an aircraft, engine, auxiliary power unit (APU), common hardware (COMHW), and tools and service equipment (TSE).

To model an asset as an assembly, it must possess at least one of the following characteristics:

- The asset has its own maintenance plan, for example, an aircraft.

- The asset accrues usage that must be tracked, for example, an engine.
- The asset is a complex or reusable unit, for example an APU.

An assembly can also be a component of a more complex assembly; referred to as *sub-assembly*. The top-level assembly is referred to as the *parent assembly*. For example, an engine assembly can stand on its own, but it can also be a sub-assembly because it plugs into an aircraft assembly, as shown in the following diagram.

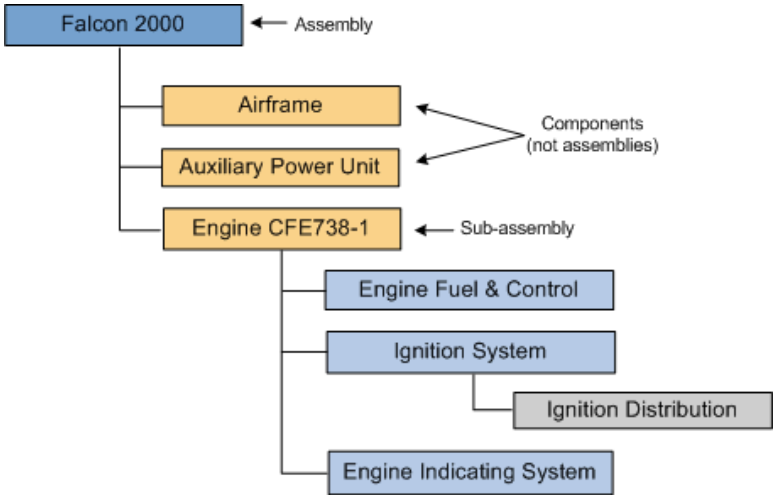

Engine sub-assembly installed on an aircraft assembly

Assembly classes

Each assembly must be assigned an assembly class. Assembly classes identify the type of assembly, the behavior of CAMO for inventory of the assembly, and the operations that are possible in CAMO. There are several standard CAMO assemblies, and your organization can add more, if needed.

The following table details standard assembly classes that are available in CAMO.

Assembly classes

Assembly Class	Assembly Class Code	Description
Aircraft	ACFT	Represents aircraft assemblies. Some CAMO features are only available for the ACFT assembly class, such as the ability to create flights, specifying inventory that is on-board, and more.

Assembly Class	Assembly Class Code	Description
Engine	ENG	Each of these represents a component that can be installed and removed from a parent assembly, usually an aircraft, and for which you want to maintain baseline information that is separate from the parent assembly. This eliminates the need to create the baseline information for every parent assembly on which the component can be installed.
Auxiliary Power Unit	APU	Not recommended. Landing gears do not have their own maintenance programs; their maintenance tasks are included in the aircraft maintenance programs. Also, landing gears only accrue usage when they are installed on the aircraft. Therefore, modelling landing gears as assemblies is not called for, and results in much administrative overhead.
Propeller	PROP	
Engine Module	MODULE	
Landing Gear	LDGEAR	
Common Hardware	COMHW	Mandatory assembly in every CAMO installation, this is used to define parts and supplies that can be used on many, or all types of assemblies. Typical common hardware assemblies include items like standard hardware, lubricants, sealants, adhesives, and more. There can only be one COMWH assembly.
Tools and Service Equipment	TSE	Mandatory assembly in every CAMO installation, this is used to define tools that can be used on many, or all types of assemblies. CAMO handles tool parts that are in the TSE assembly differently than installable parts. For example, when preparing tasks, they are listed as tools rather than parts, and they are checked out rather than issued. However, tools share many of the characteristics of installable parts; they can have serial numbers, they can have scheduled maintenance, such as a calibration task, and they can be purchased and stored. There can only be one TSE assembly.

Configuration hierarchies for assemblies

The structure of an assembly is defined by the hierarchy of the configuration slots created under the assembly.

The hierarchy of configuration slots represents the assembly's functional and physical equipment hierarchy. Once the configuration hierarchy is defined, you can identify the part numbers that can be installed in specific physical locations on the assembly, define maintenance program requirements, create job card definitions, and more.

When breaking down an assembly into configuration slots that represent its systems and components, it is recommended to use a reference standard, such as the ATA Chapter breakdown. You can use the ATA Chapter reference numbers as the codes you assign to configuration slots.

The following diagram shows a hierarchy of configuration slots under the aircraft, in which the ATA Chapter references have been used in addition to a name for each configuration slot. The configuration slots 33-00 Lights and 33-40 External Lights represent functional systems of the aircraft, whereas the two configuration slots below 33-40 Exterior Lights represent components that are installed in the exterior lighting system.

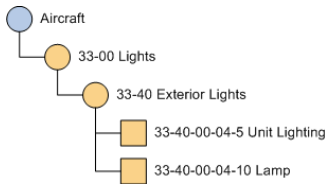

Configuration slot hierarchy

Configuration classes

Every configuration slot has a *configuration class*, which determines the level of detail and the information CAMO maintains for the parts assigned to the configuration slots. Because CAMO behaves so differently from one configuration class to another, you cannot change the configuration class that is assigned to a configuration slot.

The following diagram shows how the configuration classes are used in the configuration hierarchy:

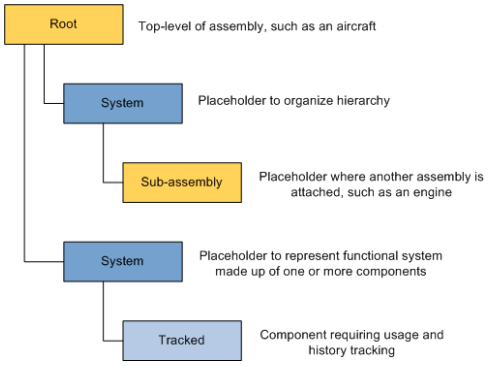

Configuration classes in the assembly hierarchy

Configuration classes

Config class	Description
ROOT	When you create an assembly, a corresponding root configuration slot is created. This is the top-level configuration slot in the assembly hierarchy. When you create a root slot, an ACFT or ASSY part group is automatically created.
SYS	System configuration slots are used to group other configuration slots that make up a functional system of the assembly, such as several tracked configuration slots that make up the air conditioning system. They do not correspond to physical components and they do not have part numbers associated with them. You create system configuration slots under root or other system slots. Do not create system slots under tracked or sub-assembly slots. The common hardware (COMHW) and the tools and service equipment (TSE) assemblies cannot have system subconfiguration slots. When you create a system slot, no part group is automatically created.

Config class	Description
SUBASSY	A sub-assembly configuration slot is where another assembly (sub-assembly) plugs into the current assembly (parent assembly), for example where an engine is installed on an aircraft. A sub-assembly can have multiple positions per parent. For example, a SUBASSY slot for an engine can have four positions. You create sub-assemblies under system configuration slots. You cannot create sub-configuration slots under sub-assembly configuration slots. The hierarchy of the sub-assembly is defined in the separate assembly that you create to model that component. To determine which assembly fits into a sub-assembly configuration slot, CAMO matches the part number assigned to the SUBASSY configuration slot to the part number assigned to the ROOT configuration slot of the sub-assembly. You cannot create a sub-assembly configuration slot under the common hardware (COMHW) or the tools and service equipment (TSE) assemblies. When you create a sub-assembly slot, an ASSY part group is automatically created.
TRK	Tracked configuration slots are used for high-value components that have the following requirements: • Stringent configuration control in CAMO. • Accrued usage must be tracked. • Regular maintenance. • A complete history of installation, removal, and repair. You create tracked configuration slots under system or other tracked configuration slots. A tracked slot can have multiple positions per parent. When you create a tracked slot, a TRK part group is automatically created.

In addition to the part groups that are created automatically for configuration slots, you can create additional part groups, on any configuration slot, including system (SYS) slots. You might want to create additional part groups for all untracked part numbers that are specific to a configuration slot. Untracked part numbers are those that have the inventory classes of serial-controlled (SER), batch-controlled (BATCH), or kit (KIT). Note that consumables that are used on many configuration slots or many assemblies should not be included in part groups on configuration slots, but rather in the common hardware assembly so that they can be added to any task.

Mandatory configuration slots

When you create a configuration slot, you specify whether it is mandatory. If a component is removed from a mandatory configuration slot, the hierarchy is considered incomplete (not airworthy) until a replacement component is installed. Missing mandatory components are displayed as errors on the Preview Release page.

If a new sub-assembly or tracked configuration slot is added to an assembly when inventory for the assembly already exists, an empty hole is created on the existing inventory (holes are not created if system slots are added). If the new configuration slot is mandatory, the assembly is marked as incomplete.

When inventory already exists, it is best to create new configuration slots as non-mandatory, create and install the appropriate inventory, and then edit the configuration slot to make it mandatory. An easy way to verify whether any inventory exists for a specific assembly is to consult the Assembly List tab - beside each assembly, a check box indicates if inventory exists in the system.

When a transaction occurs that could change whether a component is marked as complete, CAMO automatically evaluates impacted inventory and sub-components for completeness. You can manually trigger an evaluation of completeness for aircraft inventory by clicking the Evaluate Completeness button on the Inventory Details page.

Positions on configuration slots

When you create a sub-assembly or tracked configuration slot, you specify the number of positions per parent because these configuration slots can represent a single position on the assembly, or multiple positions. For example, an aircraft has two main landing gears which could be modeled in two different ways:

- As two separate configuration slots; one configuration slot for the left main landing gear and another configuration slot for the right main landing gear.
- As a single configuration slot with two positions: left and right.

Modeling as separate configuration slots allows positional control over configuration and maintenance, whereas modeling as a single configuration slot with multiple positions does not.

For example, if the left and right main landing gear require different part numbers—part A only fits on the left side, and part B only fits on the right side—this configuration is enforced by using separate configuration slots for the left and right positions. A single configuration slot with two positions cannot enforce the configuration; part A could be installed in either the left or right position, and likewise for part B.

CAMO keeps track of which part number and serial number is installed in each configuration slot and position. Mechanics must specify the configuration slot and the position every time they record a component installation or removal.

Part incompatibility rules can be defined for assembly positions.

Related concepts

Inventory classes

Create a new aircraft or configuration assembly

An assembly can exist on its own, or be a component that is installed on a more complex assembly. (An assembly that's installed on another assembly is often referred to as a *sub-assembly*.

Steps

1. On your to-do list, **Assembly List** tab, click **Create Assembly**.
2. On the **Create Assembly** page, provide the required information. Note the following:
   - **Code**: Enter the code number for the assembly.
   - **Name**: Enter a descriptive name.
   - **Class**: Select an assembly class that is applicable to the assembly you are creating.
3. Click **OK**.

Once the assembly is created, define the structure of the assembly by creating a hierarchy of configuration slots.

Create a sub-assembly configuration slot on the assembly

A sub-assembly configuration slot is where another assembly (sub-assembly) plugs into the current assembly (parent assembly), for example where an engine is installed on an aircraft.

Prerequisite

The assembly must already exist in CAMO.

Steps

1. On your to-do list, click the **Assembly List** tab.
2. In the **Assembly** column, click the link for the assembly on which you want to create a sub-configuration slot.
3. On the **Assembly Details** page, **Config Slots** tab, select the parent configuration slot for the new sub-configuration slot.
4. Click **Create Subconfig Slot**.
5. On the **Create Config Slot** page, in the **Identification and Details** area, provide the required information. Note the following:
   - **Name**: The item description found in the Illustrated Parts Catalog (IPC).
   - **Positions per Parent**: The positions per parent value indicates the number positions that will be created for a configuration slot.
   - **Config Class**: Select **SUBASSY** (Sub-assembly Config Slot).

- **Mandatory**: If a component is removed from a mandatory configuration slot, the hierarchy is considered incomplete (not airworthy) until a replacement component is installed.

6. On the **Create Config Slot** page, in the **Codes and References** area, provide the required information. Note the following:
   - **ATA Code**: A unique code for the new tracked configuration slot, for example, the ATA chapter code, followed by a short description to make the code unique.
   - **RVSM Significant**: Select this check box if the configuration slot is RVSM significant.
   - **ETOPS Significant**: Select this check box if the configuration slot is important for ETOPS approval.
7. Click **OK**.

Create a system config slot on the assembly

System configuration slots are used to group other configuration slots that make up a functional system of the assembly, such as several tracked slots that make up the air conditioning system. They do not correspond to physical components and a part group is not automatically created when you create a system configuration slot.

Prerequisite

The assembly must already exist in CAMO.

About this task

System config slots are created under the root config slot, or under other system config slots. There are three steps to complete this process: creating a system config slot, assigning usage parameters to the config slot, and then synchronizing the usage parameters.

Steps

1. On your to-do list, click the **Assembly List** tab.
2. Click the **Assembly** link for which you want to create a sub-config slot.
3. On the **Assembly Details** page, **Config Slots** tab, select the radio button for the ATA that will be the parent of the new ATA.
4. Click **Create Subconfig Slot**.
5. On the **Create Config Slot** page, in the **Identification and Details** area, provide the required information. Note the following:
   - **Name**: Enter the config slot name. This should be the ATA chapter for the system.
   - **Config Class**: Select SYS (System).
   - **Mandatory**: If a component is removed from a mandatory config slot, the hierarchy is considered incomplete (not airworthy) until a replacement component is installed.
6. In the **Codes and References** area, provide the required information. Note the following:
   - **ATA Code**: The ATA chapter code for the system.

- **RVSM Significant**: Select this check box if the config slot is RVSM significant.
- **ETOPS Significant**: Select this check box if the config slot is important for ETOPS approval.

7. In the **Sensitivities** area, select the applicable sensitive system types.
8. Click **OK**.
9. To assign a usage parameter to the config slot, on the **Assembly Details** page, click the **Config Slots** tab.
10. In the **Config Slot** column, click the link to the required config slot.
11. On the **Config Slot Details** page, click the **Parameter** tab.
12. Click **Assign Parameter**.
13. Select the radio button of the usage parameter to add to the config slot, and click **OK**.
14. On your to-do list, **Assembly List** tab, click **Synchronize Usage Parameters** to synchronize the usage parameters.

Once completed, additional system or tracked config slots can be created on this system config slot to create the functional or physical equipment hierarchy of the assembly. In addition, these changes are visible on the **History** tab.

View a tracked configuration slot

You can view a previously created tracked config slot if you want to create a tracked part group on it.

Steps

1. On your to-do list, click the **Assembly List** tab.
2. In the **Assembly** column, click the link for the assembly that contains the config slot you want to view.
3. In the **Config Slot** column, click the config slot with a class of TRK.

Create a tracked configuration slot on an assembly

Prerequisite

The assembly must already exist in CAMO.

About this task

A tracked (TRK) configuration slot is used for components that have the following requirements:

- Requires regular maintenance.
- Accrues usage that must be tracked.
- Requires a full history of installations and removals.

Tracked configuration slots are created under system or other tracked configuration slots. The steps involved in this process include creating a configuration slot, adding positions and modifying position names, assigning a usage parameter, and assigning an existing part number to the configuration slot.

Steps

1. On your to-do list, click the **Assembly List** tab.
2. In the **Assembly** column, click the link for the assembly on which you want to create a sub-configuration slot.
3. On the **Assembly Details** page, **Config Slots** tab, select the radio button of the configuration slot that is the parent of the new sub-configuration slot.
4. Click **Create Subconfig Slot**.
5. On the **Create Config Slot** page, in the **Identification and Details** area, provide the required information. Note the following:
   - **Name**: The item description found in the Illustrated Parts Catalog (IPC).
   - **Positions per Parent**: The positions per parent value indicates the number positions that will be created for a configuration slot.
   - **Config Class**: Select TRK (Tracked Config Slot).
   - **Mandatory**: If a component is removed from a mandatory configuration slot, the hierarchy is considered incomplete (not airworthy) until a replacement component is installed.
   - **Software**: Select this check box if you want to install software components on the assembly, for example, Field Loadable Software (FLS).
6. On the **Create Config Slot** page, in the **Codes and References** area, provide the required information. Note the following:
   - **ATA Code**: A unique code for the new tracked configuration slot, for example, the ATA chapter code, followed by a short description to make the code unique.
   - **RVSM Significant**: Select this check box if the configuration slot is RVSM significant.
   - **ETOPS Significant**: Select this check box if the configuration slot is important for ETOPS approval.
7. Click **OK**.

Software parts

You can create part numbers in CAMO for software applications that are installed and updated on assemblies, such as Field Loadable Software (FLS) installed on aircraft.

However, software applications have peculiarities that do not apply to other types of parts:

- Software applications do not use the same material management workflows as other parts; they are often uploaded via a network, instead of being shipped, received, and routed to the correct inventory.
- Although you can install software on several different inventory items and you may be required to track when and where each version of the software is installed to prove compliance, the instance of the software installed on each inventory item does not have a unique serial number.

When you create tracked configuration slots on an assembly and select the Software check box, all tracked part numbers added to the tracked part group—which CAMO creates on the configuration slot —are treated as software components. For software components, unlike regular tracked parts, CAMO does not:

- Require a unique serial number for software inventory you create in the system.
- Create shipments, transfers, turn ins, cycle counting, or track stock for software, because such workflows do not apply to software components.
- Create a removal task when software components are installed; a software installation is a first installation, an upgrade, or a minor update, and no physical item is removed or discarded as a result of the installation. However, a software installation is not permitted when there is already software installed in the config slot position, and the installed software can only be replaced. Also, repairable software parts cannot be used for part removal (software parts by definition are not repairable).
- Generate a part request when a software component is added to a task as a part requirement, because software components are not stored in a warehouse, and are not usually obtained from material management personnel.

You use CAMO tasks to schedule and track the installation and update of software applications on inventory items. You should include the version number of the software application in the part number to make it easy to see which version is installed on each applicable inventory.

You can also use the part applicability, interchangeability, and incompatibility features of CAMO to accomplish the following:

- Prevent the wrong software, or wrong version of the software, from being installed on specific assemblies or inventory.
- Prevent incompatible software from being installed on the same inventory.
- Prevent incompatible software and hardware from coexisting on the same inventory.
- Prevent the installation of a software version that should not be installed on the inventory because some work was done on the inventory which makes the software incompatible with

the inventory, or because some work that is required to make the software compatible with the inventory has not been done yet.

Related tasks

Add software parts to a configuration slot on an assembly

Add software parts to a configuration slot on an assembly

Software parts, like physical parts, are managed via config slots. Although software parts do not require regular maintenance, a history of installation is important to ensure software upgrades are applied.

Prerequisite

The assembly must already exist in CAMO.

Steps

1. Go to the **Assembly List** tab.
2. In the **Assembly** column, click the link for the assembly on which you want to create a sub-configuration slot.
3. On the **Assembly Details** page, **Config Slots** tab, select the radio button of the configuration slot that is the parent of the new sub-configuration slot.
4. Click **Create Subconfig Slot**.
5. On the **Create Config Slot** page, in the **Identification and Details** area, provide the required information. Note the following:
   - **Name**: The item description found in the Illustrated Parts Catalog (IPC) or other authoritative document.
   - **Positions per Parent**: The positions per parent value indicates the number positions that will be created for a configuration slot.
   - **Config Class**: Select TRK (Tracked Config Slot).
   - **Mandatory**: If a component is removed from a mandatory configuration slot, the hierarchy is considered incomplete (not airworthy) until a replacement component is installed.
   - **Software**: Select this check box if you want to install software components on the assembly, for example, Field Loadable Software (FLS).
6. On the **Create Config Slot** page, in the **Codes and References** area, provide the required information. Note the following:
   - **ATA Code**: A unique code for the new tracked configuration slot, for example, the ATA chapter code, followed by a short description to make the code unique.
   - **RVSM Significant**: Select this check box if the configuration slot is RVSM significant.
   - **ETOPS Significant**: Select this check box if the configuration slot is important for ETOPS approval.

7. Click **OK**.

Related concepts

Software parts

Assembly List tab

The Assembly List tab displays all assemblies over which the user has authority, and all assemblies that have no authority.

The table of assemblies contains the following columns:

- Assembly: The name of the assembly. Click the hyperlink to go to the Assembly Details page.
- Inventory Exists: If this check box is selected, CAMO contains inventory against this assembly.

Sensitive systems

Sensitive systems are aircraft systems that may require certification, often by a specialized or certified technician, after maintenance has been performed. This certification may need to occur before the aircraft can be released. You can configure sensitivities on SYS class config slots.

By default, CAMO supports the following sensitive system types:

- Category III Instrument Landing System (CAT III)
- Extended-range Twin-engine Operational Performance Standards (ETOPS)
- Required Inspection Item (RII)
- Fatigue Critical Baseline Structure (FCBS)
- Reduced Vertical Separation Minimum (RVSM)

Note You cannot add sensitivities to Tracked (TRK), Root (ROOT), or Sub-assembly (SUBASSY) config slots.

The History tab for the config slot records events associated with sensitivities. For example, when a user changes a sensitivity type on a config slot, or a user applies a sensitivity from a parent to a child config slot, the History tab displays this information.

Maintenance technicians will see warnings when working with faults that have associated sensitivities. For example, if a technician is raising an open fault on a CAT III sensitive system, CAMO will display a warning indicating that the aircraft may require re-certification or, depending on your organization, some other special instructions.

CAMO displays these warnings during the following workflows:

- Raise open logbook fault
- Log fault and close

- Log fault and defer
- Log fault and request part immediately

Add sensitivities to a config slot

You can add sensitivities to a system (SYS) config slot when you create it.

About this task

Maintenance technicians will see warnings when working with faults that have associated sensitivities. For example, if a technician is raising an open fault on a CAT III sensitive system, CAMO will display a warning indicating that the aircraft may require re-certification or, depending on your organization, some other special instructions.

Steps

1. On your to-do list, click the **Assembly List** tab.
2. In the **Assembly** column, click the link for the assembly.
3. Click the radio button next to the config slot, and then click **Create Subconfig Slot**.
4. On the **Create Config Slot** page, in the **Identification and Details** area, provide the required information. Note the following:
   - **Name**: Enter the config slot name. This should be the ATA chapter for the system.
   - **Config Class**: Select SYS (System).
   - **Mandatory**: If a component is removed from a mandatory config slot, the hierarchy is considered incomplete (not airworthy) until a replacement component is installed.
5. In the **Codes and References** area, provide the required information. Note the following:
   - **ATA Code**: The ATA chapter code for the system.
   - **RVSM Significant**: Select this check box if the config slot is RVSM significant.
   - **ETOPS Significant**: Select this check box if the config slot is important for ETOPS approval.
6. In the **Sensitivities** area, select the check box (or boxes) next to the sensitivity (sensitivities) you want to add to the config slot.
7. Click **OK**.

A record of this change is displayed on the History tab.

View the sensitivities associated with a config slot

You can view the details of a config slot to see the sensitivities associated with it.

Steps

1. On your to-do list, click the **Assembly List** tab.
2. In the **Assembly** column, click the link for the assembly that contains the config slot you want to view.

3. In the **Config Slot** column, click the config slot.
4. In the **Sensitivities** area, sensitive system types are identified by selected check boxes.

Edit sensitivities on a config slot

You can edit sensitivities on a config slot if you need to add or remove sensitivities from it.

About this task

The following procedure details how to edit sensitivities on an existing config slot. If you want to create a config slot and add sensitivities to it at the same time, see *Add sensitivities to a config slot*.

Steps

1. On your to-do list, click the **Assembly List** tab.
2. In the **Assembly** column, click the link for the assembly.
3. In the **Config Slot** column, click the config slot.
4. In the **Identification and Details** area, click the **Edit Config Slot** icon.
5. In the **Sensitivities** area, select or clear the check box next to the sensitivity you want to add or remove, respectively.
6. In the **Sensitivity Propagation** area, select the **Apply to sub config slots** check box if you want to cascade, or apply, the sensitivities to subordinate config slots.
7. Click **OK**.

A record of this change is displayed on the History tab.

Delete a config slot

When you delete a config slot, CAMO deletes all of the child sub-config slots and all associated items such as sensitivities.

About this task

> **Note**
>
> You cannot delete a config slot if it contains either:
>
> - leaf nodes
> - defined inventory

Steps

1. On your to-do list, click the **Assembly List** tab.

2. In the **Assembly** column, click the link for the assembly containing the config slot you want to delete.
3. In the **Config Slot** column, click the config slot.
4. Click the radio button in the row for the config slot you want to delete, and then click **Delete Config Slot**.

A record of this change is displayed on the History tab.

Assign sensitivities to an assembly

You can assign sensitivities to a SYS assembly so that all subordinate config and subconfig slots will have these sensitivities available for assignment. Once assigned and configured, technicians will see sensitivity warnings when raising faults, or performing tasks that are ETOPS significant, on the associated systems.

Prerequisite

Before you can assign a sensitivity to an assembly, the sensitivity must be globally active. For more information on globally activating sensitivities, contact your CAMO representative.

About this task

As an engineer, you may want to mark specific systems on an assembly as sensitive, which will warn maintenance technicians when raising faults against these systems. Systems with sensitivities may impact the capabilities of an aircraft, which may require follow-up actions such as re-certification tasks.

Note Assigning sensitivities to an assembly should be done during baseline configuration. If you already have CAMO installed, it should be done prior to using the sensitive system and parts functionality.

Steps

1. On your to-do list, click the **Assembly List** tab.
2. In the **Assembly** column, click the assembly.
3. Click the **Sensitivities** tab.
4. Click **Assign Sensitivity**.
5. Select the check box, or boxes, next to the sensitivity, or sensitivities, you want to assign to the assembly.
6. Click **OK**.

What's next

You must also ensure that the sensitivity has been added on the config slot or part group.

Related tasks

Edit part group details
Add sensitivities to a config slot

Sensitive system warnings and aircraft capability levels

Aircraft capabilities, if configured at your organization, can influence if sensitivity warnings are displayed or not displayed to technicians.

Maintenance technicians will see warnings when they raise a fault on a sensitive system that has a sensitivity mapped to a capability level and the aircraft is configured to that capability level. The same is true for adding part requirements to a fault. However, if the aircraft does not have a capability level and a sensitivity mapped to it, the technician will not see any warnings. If there are no capability levels mapped to a sensitivity, warnings will be displayed.

Consider the following scenarios:

Scenario 1: Aircraft has the configured capability level (ETOPS60, ETOPS90 and ETOPS120) and the level is mapped to a sensitivity

Capability	Capability level	Sensitivity	Sensitivity warning shown?
ETOPS	NO_ETOPS		No
	ETOPS60	ETOPS	Yes
	ETOPS90	ETOPS	Yes
	ETOPS120	ETOPS	Yes

Scenario 2: Aircraft does not have the configured capability level (aircraft has NO_ETOPS) and the level is not mapped to a sensitivity

Capability	Capability level	Sensitivity	Sensitivity warning shown?
ETOPS	NO_ETOPS		No
	ETOPS60	ETOPS	No
	ETOPS90	ETOPS	No
	ETOPS120	ETOPS	No

View sensitivity mappings to capability levels

Mapping of sensitivities to capability levels occurs in the database, but you can view these mappings in CAMO. Maintenance technicians will be alerted when a fault is raised, or a part requirement is added, on a sensitive system that has the capability level configured.

Steps

1. On your to-do list, click the **Assembly List** tab.
2. In the **Assembly** column, click the link for the assembly.
3. Click the **Capabilities** tab.

Contact your CAMO administrator if you need the mappings changed.

Part numbers and part groups

Part numbers are used to represent all the physical items on which technicians perform maintenance work, and all the items that are used during maintenance work. Part groups are associated with configuration slots and represent the set of alternate parts that can be installed in a particular configuration slot.

You create part numbers to identify the following: the parts you install, the consumables used during maintenance work, tools, kits—collections of different items that are to be used together for a specific purpose—and the assets themselves, such as engines and aircraft. Often, there are two or more part numbers that have the same form and function—for example, the same part, but made by different manufacturers—and that are valid alternates to each other. These parts are in the same part group.

Part groups are created automatically created when you create configuration slots - one part group for each slot created. You can create additional part groups on any configuration slot, including system (SYS) slots. You might want to create additional part groups for all untracked part numbers that are specific to a configuration slot. Untracked part numbers are those that have the inventory classes of serial-controlled (SER), batch-controlled (BATCH), or kit (KIT). Note that consumables that are used on many configuration slots or many assemblies should not be included in part groups on configuration slots, but rather in the common hardware assembly so that they can be added to any task.

All part numbers must be associated with a manufacturer. In CAMO, the combination of the part number and manufacturer forms a unique identifier for a part. This allows a specific part number to exist in the system under different manufacturers.

You must create part numbers for the types of aircraft on which you will complete maintenance, the components you remove and send for repair, the parts and consumables you provide for the maintenance visits, and the parts supplied by your customers (the owners of the aircraft). Also, it is advisable to create part numbers for specialized tools you use on projects. Creating part numbers for these items allows you to do the following:

- Specify the parts you will provide in the quotes you submit to customers.
- Identify all the parts required for a maintenance visit—those you supply and those the customer supplies.
- Identify the tools required to perform some of the work—mostly specialized or expensive tools that are in limited supply, and that you track more closely than commonly used tools.
- Use the material management features of CAMO for all inventory needed to complete projects.

When you create a new part in CAMO, its part status is set to Build, and the use of the part number in workflows is restricted. To use the part number, it must first be approved for general use. When a part number is reviewed and approved, its status changes to Active and it is available for use in all workflows.

Usually, most of the part numbers are loaded into the database directly during the implementation of CAMO. However, you can use CAMO to add new part numbers, or to edit the details of part number, as needed, for example, to change the price you are charging customers for a part.

Line and shop replaceable units

Each part group in CAMO is identified as a line replaceable unit (LRU) or a shop replaceable unit (SRU). CAMO uses the LRU and SRU attribute on the part group, (in conjunction with the Must Be Removed value specified in requirement definitions), to create replacement tasks for the appropriate configuration slots when parts in the part group must be removed.

When a component requires maintenance, LRU parts can be removed directly from the aircraft, or from another top-level assembly. SRU parts cannot be removed directly from the aircraft, or assembly. Before a technician can access and work on the SRU, a parent LRU part must be removed from the aircraft first.

By default, all part groups are LRUs, except for part groups that are created on the root configuration slot of an aircraft assembly; an aircraft cannot be an LRU. To identify the part group as an SRU, you edit the part group and clear the Line Replaceable Unit checkbox. (In the user interface, the part group isn't labelled SRU, but if the LRU checkbox is cleared, the part group is SRU.) You cannot designate kit part groups as SRUs.

CAMO handles maintenance differently based on whether the part is an LRU or an SRU, and on the value that is specified for the Must Be Removed attribute when task definitions are created. For example, when a task is initialized against an SRU item, CAMO automatically finds the parent item that is an LRU, and creates a replacement task on that parent item, so that the LRU can be removed to allow work to be done on the SRU.

The following diagram shows an example of an SRU (the fan blade) which is installed on an LRU (the engine). The engine must be removed in order to remove the fan blade.

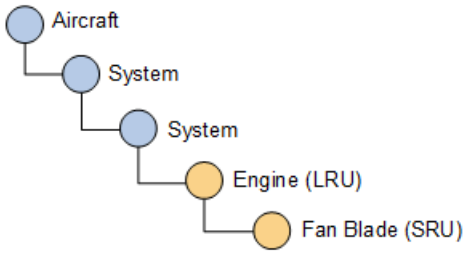

LRU and SRU in the configuration hierarchy

Identifying a component or a part as an SRU does not prevent you from creating tasks or faults on the aircraft that state the SRU must be replaced. However, it helps maintenance planners because CAMO includes logic that uses the SRU designation to create the replacement task on the correct parent component in the assembly automatically.

Related concepts

Component work packages and replacement tasks
How component work packages are created automatically

Create part numbers

You must create part numbers to identify the parts you install on assemblies, the consumables used during maintenance work, tools, kits, and top-level assemblies like the engine or the aircraft. After a part number is created, you must get it approved for general use in CAMO.

About this task

For using an alternate part number, make sure that it is approved as an alternate in every part group to which it is added.

Steps

1. Select the **Part Search By Type** menu item.
2. On the **Part Search** page, click **Create Part**.
3. On the **Create Part** page, in the **Part Details** area, provide the required information. Note the following:
   - **Manufacturer**: Enter the manufacturer code or UNK if unknown.
   - **Standard Unit of Measure**: When the part is being moved, issued, installed, turned in, etc., the part must have a standard unit of measure to avoid confusion. You need to select this from the available list. The only time the standard unit of measure may not be used is when purchasing parts externally.
   - **Controlled Reservation**: Prevents auto-reservation for the part number. When inventory is manually reserved, only the serial number or batch number specified in the reservation can be issued. Aircraft doors are an example of parts that might have controlled reservation.

- **Repairable**: Select this check box if this item is repairable. Repairable items are turned in after they are removed as unservicable from the aircraft or assembly.
- **Prevent Auto-reservation**: Part requests for the part number must be manually reserved. Expensive parts are an example of when you might prevent auto-reservation.
- **ETOPS Approved**: Select if the part is Extended Twin Engine Operations (ETOPS) approved.
- **Scrap Rate**: Set the scrap rate percentage from 0 to 100, where 0 means the part is scrapped 0% of the time, and 100 means the part is scrapped 100% of the time.
- **ABC Classification**: Select from the list to define how frequently the part will be stock counted.
- **Auto Calculate ABC Class**: Select if you use CAMO for cycle counting. Enables automatic re-evaluation of the part's ABC classification based on system data.
- **Asset / Expense Account**: Enter the account that is to be charged (if any) when a repair order is created for this part. Only EXPENSE type repair accounts can be specified.

4. Click **OK**.
5. If prompted, enter your password and click **OK**.
6. On the **Part Details** page, click **Approve Part**.
7. On the **Approve Part No** page, provide the information requested, and click **OK**.
8. If prompted, enter your password and click **OK**.

Once the part is created and approved, it can be added to a part group on a configuration slot. If there are alternate parts, you can enter them next.

Create part groups

You create part groups to put together all alternate parts that can be installed on each configuration slot of the system (SYS) class.

Steps

1. On the **Part Group Search** page, click **Create Part Group**.
2. On the **Create Part Group** page, provide the required information. Note the following:
   - **Assembly**: Select the assembly from the drop-down list.
   - **Part Group Code**: Enter the part number.
   - **Part Group Name**: Enter the group name/nomenclature.
   - **Quantity**: Enter the quantity to be installed on the configuration slot.
   - **Inventory Class**: Select the inventory class.
   - **Purchase Type**: Optionally, select the purchase type. The purchase type can be used as a search filter and to divide work between purchasing agents and material planners.
3. Click **OK**.

Note A kit part group cannot have alternate parts. If a kit part group is specific to an assembly, only valid alternate parts for that assembly, common hardware, and tools can be added to the kit.

Create alternate parts

About this task

If there are alternate parts that can be used for a part number, you create alternate parts in CAMO.

Steps

1. Click the **Part Search** menu item.
2. Enter the search criteria in one of the fields available, and click **Search**.
3. Select the part in the **Parts Found** list and click **Create Alternate Part**.
4. On the **Create Alternate Part** page, provide the required information. Note the following:
   - **New Part No.**: Enter the new part number.
   - **Manufacturer**: Enter the manufacturer of the new part number, or get one from the manufacturer search page.
   - **Approve Part**: Select this check box to activate the part.
   - **Approve as Alternate**: Select this check box to approve the part as an alternate for this part group.
5. Click **OK**.
6. If prompted, enter your password and click **OK**.

Assign parts to part groups

About this task

Every part number must belong to at least one part group. The part number must have the same inventory class as the part group. You can approve an alternate part number while assigning it to a part group or later. You must also designate one part number in the part group as a standard part number, which is used to mark the primary part number within the group.

Steps

1. On the **Part Group Search** page, enter the appropriate search criteria, and click **Search**.
2. On the **Part Groups Found** tab, click the part group.
3. On the **Part Group Details** page, select the **Assigned Parts** tab.
4. On the **Assigned Parts** tab, click **Assign Part No**.

5. On the **Add Alternate Part** page, provide the required information. Note the following:
   - **Add Alternate Part**: Enter the part number of the alternate part, or click to search for the part.
   - **Approve Part**: Select this check box to immediately activate the part.
   - **Approve As Alternate**: Select this check box to immediately approve the part as an alternate for this part group.
6. Click **OK**.
7. On the **Part Group Details** page, **Assigned Parts** tab, click **Edit Assigned Parts Details**.
8. In the **Alternate Parts** table, **Standard** column, select the standard part.
9. Click **OK**.
10. On the **Part Group Details** page, click the **Assigned Parts** tab.
11. Select the part.
12. Click **Approve Alternate Part**.
13. On the **Approve Alternate Part** page, provide the information requested, and click **OK**.

Create aircraft part numbers

Prerequisite

- The aircraft type (the aircraft assembly) already exists in CAMO.

About this task

You must create an aircraft part number for every type of aircraft on which your organization performs maintenance visits. Also, you must add the aircraft part number to the part group that is associated with the aircraft assembly, approve the part number, and approve it for the part group it belongs to.

Steps

1. Select the **Part Search By Type** menu item.
2. On the **Part Search** page, click **Create Part**.
3. On the **Create Part** page, in the **Part Details** area, provide the required information. Note the following:
   - **OEM Part Number**: Enter the aircraft part number.
   - **Part Name**: Enter the part name/nomenclature.
   - **Inventory Class**: Select ACFT (Aircraft).
   - **Manufacturer**: Enter the manufacturer code.
4. Click **OK**.
5. On the **Part Details** page, click the **Alternate Parts** tab.
6. Click **Assign to Part Group**.

7. On the **Part Group Search** page, specify the search criteria to find the aircraft assembly corresponding to the aircraft part number. For example, click next to **Assembly**, and select the aircraft assembly, and then click **Search**.
8. On the **Part Groups Found** tab, select the part group and click **Select Part Group**.
9. On the **Part Details** page, click **Approve Part**.
10. On the **Approve Part No** page, provide the information requested, and click **OK**.
11. If prompted, enter your password and click **OK**.
12. On the **Part Group Details** page, click the **Assigned Part**s tab.
13. Select the part.
14. Click **Approve Alternate Part**.
15. On the **Approve Alternate Part** page, provide the information requested, and click **OK**.

Reject part numbers and part obsolescence

About this task

When a part number reaches the end of its service life—for example, if the use of newer parts that fulfill the same function becomes mandatory, or if your organization rejects the part for any other reason—the status of the old part number is changed to obsolete. This status restricts the use of the part number in CAMO work flows, with the aim of eventually removing all inventory that is based on the part from service. Obsolete part numbers can be re-approved for use, and become active again.

Steps

1. On the **Part Group Search** page, enter the appropriate search criteria and click **Search**.
2. On the **Part Groups Found** tab, click the part number.
3. On the **Part Details** page, click **Reject Part**.
4. On the **Reject Part Number** page, provide the information requested, and click **OK**.
5. If prompted, enter your password and click **OK**.

Once a part number is rejected, it cannot be inspected as serviceable, and therefore it cannot be issued or installed. However, parts that were installed before the part number became obsolete remain serviceable until they are removed.

Delete part numbers

Prerequisite

You can delete a part number from CAMO as long as all of the following are true:

- The part status is Build. Part numbers with an Obsolete status cannot be deleted.
- There are no task definitions that have a part requirement for the part.
- There are no actual tasks that have a part requirement for the part.

Steps

1. On the **Part Group Search** page, enter the appropriate search criteria and click **Search**.
2. On the **Part Groups Found** tab, select the part.
3. Click **Delete Part**.
4. On the **Confirm** page, click **Yes**.

Configuration rules for part groups

By default, CAMO considers all part groups and part numbers specified in an assembly to be applicable to all inventory that matches the assembly, at all times. It is also considered that they are all compatible with each other; for example, part A installed on configuration slot 1 is compatible with part F installed on configuration slot 4. CAMO also considers all part numbers in a part group to be valid alternates to each other. Part applicability, part interchangeability, and part incompatibility are CAMO features that let you further refine your equipment baseline by specifying exceptions to the default behavior.

Part applicability is used to identify the subset of the available inventory of a given assembly to which a part number applies. For example, a newer aircraft of a given type has an in-seat entertainment system installed, whereas older aircraft of the same type just has a cabin entertainment system. Therefore, different tail numbers (inventory) of the same type of plane (assembly) use different part numbers, or part groups, for their entertainment systems.

Part interchangeability is used to determine which part numbers can be used as substitutes for other part numbers within the same part group. This is useful when you want to make sure that certain parts, usually older versions of a part number, are not installed on an assembly after a newer version of the part has been installed.

Part incompatibility rules let you specify that a part number cannot be installed on the assembly or under a sub-assembly configuration slot position when another specific part number is installed—for example, to install a particular avionics unit, you must use a specific sensor that is compatible with the unit. (The avionics unit is incompatible with other sensor part numbers). You can also use part incompatibility to specify that a part number can only be installed on the inventory when a specific task has been completed on the inventory, or has not been completed.

Part applicability

In CAMO, you use part groups to represent the set of alternate parts that can be installed to replace each other. By default, all part numbers within a part group are considered to be universally valid alternates of each other. However, each individual aircraft is unique, and an aircraft's history of manufacture, modifications, and capabilities can affect which part numbers are actually valid for that particular aircraft. In CAMO, you can identify the specific aircraft on which a part number can be installed using the "applicability" feature.

You set up applicability by doing the following:

- Specify an *applicability code* for every aircraft inventory record. This is an attribute on every aircraft, and it is used to uniquely identify the aircraft for the applicability feature(s). It is common practice to use the tail numbers of aircraft as applicability codes, but you can use any value. Applicability codes are alphanumeric and can use any combination of numbers and letters.
- Set the *applicability range* on the part number within the part group. The *applicability range* consists of one or more applicability codes separated by commas and/or hyphens. Do not type spaces between the comma, hyphens and codes.

If the applicability code of the aircraft is included in the applicability range of a part, that part can be requested, reserved, issued and installed on the aircraft. If the applicability code of the aircraft is not included in the applicability range of a part, CAMO will prevent that part from being requested, reserved, issued or installed.

If the aircraft does not have an applicability code, CAMO ignores applicability altogether and every part will be valid on this aircraft. If a part number does not have an applicability code, CAMO will ignore applicability and it will be allowed on every aircraft.

The following table provides some examples of how applicability ranges are specified. Note that empty cells in the tables below indicate blank values.

Part Number Applicability

Applicability Range of Part	Values Included in the Range
332,A12	This part can be installed on two aircraft, the aircraft with applicability codes 332 and A12.
332,348-350	This part can be installed on aircraft with applicability codes 332, 348, 349, 350, and any three-character string that is within the range 348-350, such as 34A and 34Z. This will not include the aircraft with applicability code 35A

Applicability Range of Part	Values Included in the Range
A100-A199	This part can be installed on aircraft with applicability codes A100, A101, ..., A199, and any four-character string that is within the range, such as A10A, A18Z. This will not include the aircraft with applicability code A, A1, A10, A19A
	This part can be installed on any aircraft.
N/A	This part cannot be installed on any aircraft

In addition to specifying applicability on a part number, you can set an applicability range on the part group itself. This will allow you to indicate whether that part group exists on a particular aircraft. If the applicability code of an aircraft is included in the applicability of a part group, then that part group (configuration slot) will appear on the aircraft's configuration tree, and part requirements can be requested for that part group. If the applicability code of an aircraft is not included in the applicability range of a part group, then that part group (configuration slot) will not appear in the aircraft's configuration tree, and part requirements cannot be requested for that part group.

The following table provides examples of part group applicability:

Part group applicability

Inventory Applicability Code	Part Group Applicability Range	Is the Part Group Applicable to the Inventory?
		Yes
	N/A	No
	100-199	Yes
	200-299	Yes
101		Yes
101	N/A	No

You can set the applicability range for a part group, and then further define an applicability range for each alternate part within the part group.

For example:

- There are 4 aircraft with the following applicability codes: 101, 102, 103, 104
- There is a Part Group AA with applicability range = 101-103

- Part A with applicability range = 101-102
- Part B with applicability range = 103
- Part C with no applicability range specified

While the part group is applicable to aircraft 101, 102, and 103, Alternate Part A is only applicable to aircraft 101 and 102. Alternate Part B is only applicable to aircraft 103. No applicability range was set for Alternate Part C, so it applies to all aircraft; however the part group is only applicable to aircraft 101, 102, and 103, so you will only be able to install the part on those 3 aircraft. Neither the part group or any part inside it can be assigned to aircraft 104.

You set the applicability range on a part group by editing the part group details. You set the applicability range on individual part numbers by doing one of the following:

- Going to the Part Details page, Alternate Parts tab, and editing the details of one or more of the alternate parts.
- Going to the Part Group Details page, Applicability tab, and editing the applicability.

Sub-Assembly Applicability

You can assign applicability codes to sub-assembly inventory, such as engines and APUs, and you can define applicability ranges on those sub-assembly part groups and part numbers. For the most part, sub-assembly applicability checks behave the same as aircraft applicability checks. However, instead of checking the applicability range against the applicability code of the aircraft, they will check the applicability code of the parent sub-assembly inventory.

There is a configuration parameter APPLY_APPLICABILITY_CHECK_TO_NH_ASSEMBLY that can alter how the applicability checks are done. This value can be set to TRUE or FALSE.

- TRUE (default): Applicability checks behave as normal; check that the parent sub-assembly's applicability code falls within the part group's and part number's applicability range.
- FALSE: Applicability ranges on sub-assembly part numbers actually list the *aircraft* applicability codes to which they apply, not the parent sub-assemblies. This means that applicability checks will not be done unless you are installing the sub-component onto an aircraft; either installing the parent sub-assembly onto an aircraft, or installing the component onto an already on-wing sub-assembly. This configuration parameter does not affect part group applicability checks, and it has no effect on aircraft part numbers.

The part group Applicability tab lists the inventory matching the assembly to which the part group is associated, and whether the part group, and each alternate part within the part group, apply to the individual inventory items.

Part interchangeability

Part interchangeability refers to whether an alternate part number can be substituted for all of the alternate part numbers in the part group. By default, CAMO considers all the part numbers in a

part group to be valid alternates to each other, therefore interchangeable with any of the alternate parts in the part group. This is called two-way interchangeability.

However, there are situations when you want to specify one-way interchangeability, where part A can be used to replace part B, but part B cannot be used to replace part A, as shown in the following diagram. One-way interchangeability can be specified for part numbers that have one of the following inventory classes: assembly, tracked, and serial-controlled.

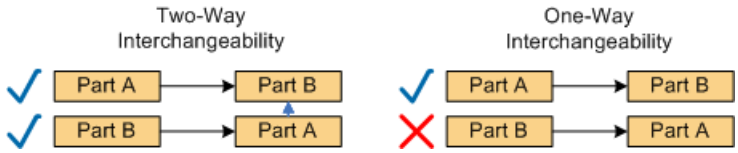

Part Interchangeability

CAMO assigns an *interchangeability order* value of 1 for each part number you create in the system, which makes all parts in the same part group interchangeable with each other (two-way interchangeability). You can edit the details of the part numbers to give them different interchangeability order values.

Whenever a part is installed on an assembly, as part of a maintenance task or when technical records personnel update inventory records after the installation has been performed, CAMO compares the part number of the removed component with the part number of the installed component. CAMO lets mechanics install part numbers that have the same interchangeability order, or a higher one, than the part that is currently installed, but does not allow the installation of a part with a lower interchangeability order. Within a part group, part numbers that have the same interchangeability order are two-way interchangeable.

Note

Your administrator can configure CAMO to only display warnings about interchangeability problems but still allow users to proceed, or display an error and prevent the user from continuing. Also, the administrator can configure CAMO to allow only a subset of users, for example those with the maintenance supervisor role, to proceed with the installation of a non-interchangeable part, while preventing all other maintenance users from doing so. See the CAMO Administration Guide.

The following is an example of a part group that include different interchangeability values:

Interchangeability Order in a Part Group

Part Group	Part Number	Interchangeability Order
33-20-00-04-5 (Unit Lighting)	Part A	1

Part Group	Part Number	Interchangeability Order
	Part B	1
	Part C	2

In this situation, Part A and Part B are two-way interchangeable, because they have the same interchangeability order. However, Part A and Part C are one way interchangeable, as are Part B and Part C, because in each case, the parts have different interchangeability order values.

For the one-way interchangeable parts numbers, the following is true:

- CAMO allows Part A and Part B to be replaced with Part C, because the latter part number has a higher interchangeability order.
- CAMO does not allow Part C to be replaced with either Part A or Part B, because both of these part numbers have a lower interchangeability order.
- All other permutations are allowed: replacing Part A with part B, replacing Part B with Part A, and any replacement involving two parts of the same part number.

You can see the interchangeability order value of parts, and edit them, on the Part Group Details page, Assigned Parts tab, and on the Part Details page, Alternate Parts tab.

Part and task incompatibilities

By default, CAMO assumes that all parts are compatible with all other parts and that all part numbers can be installed on an assembly regardless of what tasks are completed or open on the assembly. In practice, some parts can only be installed in conjunction with other specific parts, or when a task (such as a modification) has a specific status.

For example, there might be several part number versions of an instrument panel and of an airspeed indicator.

- Only the latest version of the airspeed indicator can be installed on the latest version of the instrument panel.
- The older versions of the airspeed indicator can't be used with the new instrument panel, but the latest version of the airspeed indicator can be used with older instrument panels.

If an aircraft structure is modified in order to install the latest version of the instrument panel then after the modification task is performed, only the latest version of the instrument panel can be installed.

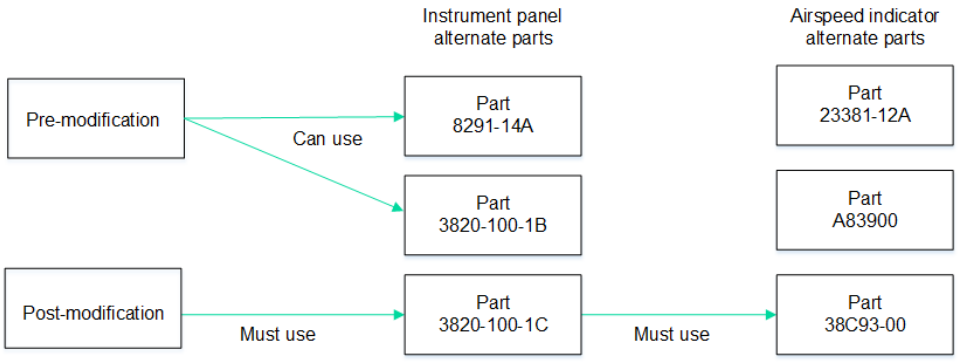

Compatibility scenario

To model this in the CAMO baseline and ensure that only compatible parts are installed, you create part or task incompatibility rules to explicitly define combinations of parts and tasks that can't be used together. Incompatibility rules create exceptions to the default behavior. The diagram below shows the incompatibility rules that are required for the scenario diagram above. All other combinations of parts in the instrument panel and airspeed indicator part groups are compatible and can be installed together.

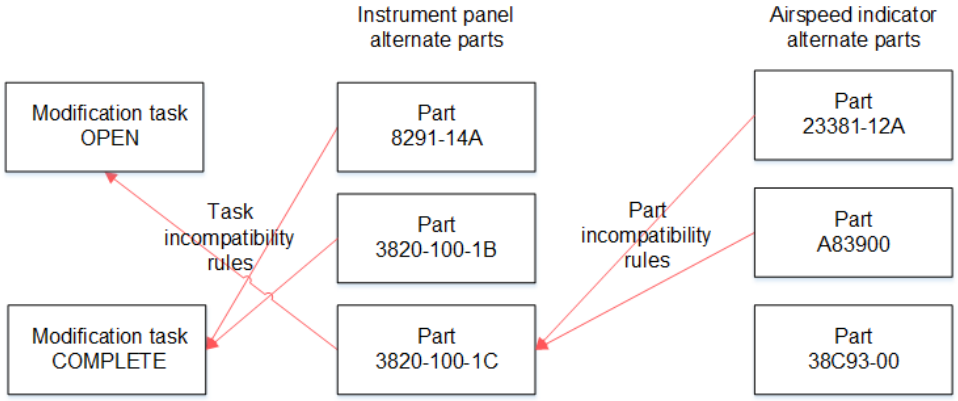

Incompatibility rules in CAMO

Part incompatibility

Part incompatibility rules specify which part numbers, within groups of alternate part numbers, are not compatible with other part numbers. You can specify incompatibility rules for parts within the same part group or in different part groups. CAMO assesses part incompatibility when parts are reserved, issued, and installed.

CAMO supports part incompatibility rules only between part numbers with the tracked inventory class.

When you create part incompatibility rules, you choose a part incompatibility type that enforces the rule within a broader or smaller scope in the hierarchy of configuration slots. To understand how these types work, recall that:

- Configuration hierarchies are built with root, system, sub-assembly, and tracked classes of configuration slots.
- A root configuration slot is an aircraft or assembly.
- Sub-assembly and tracked slots can have multiple positions.
- Configuration slots have part groups.

There are two part incompatibility types:

Global part incompatibility

Incompatibility is assessed against all other parts installed under the highest parent assembly (root configuration slot) of the installed part. If the part is installed on a sub-assembly that's installed on an aircraft, then the aircraft is the highest assembly. If the part is installed on a loose assembly, such as an engine, the highest assembly at that time is the engine.

Parts that are incompatible with parts already installed anywhere on the highest assembly can't be installed.

You could use the Global type to ensure that an aircraft has all the same engines installed. For example, if an engine configuration slot has two positions and both positions require the same engine, both either engine A or engine B, then you create a Global type part incompatibility rule for the engine part number.

Assembly position part incompatibility

Sub-assembly class configuration slots can have multiple positions. Incompatibility is assessed up to and under the sub-assembly configuration slot position that a part is installed on.

Parts that are incompatible with another part installed under the sub-assembly configuration slot position, can't be installed.

You could use the Assembly position type to ensure that parts on an engine are compatible, while allowing multiple engines installed on an aircraft to have different (alternate) parts installed.

The following examples show the difference in part compatibility outcomes when an incompatibility rule is created for Parts A and B with the Global type and with the Assembly Position type.

In example one below, Parts A and B are installed in two positions of a tracked configuration slot. Note that the tracked slot is not under the sub-assembly configuration slot position.

- If the incompatibility rule is the Global type, Part A and Part B are incompatible.
- If the incompatibility rule is the Assembly Position type, Part A and Part B are compatible.

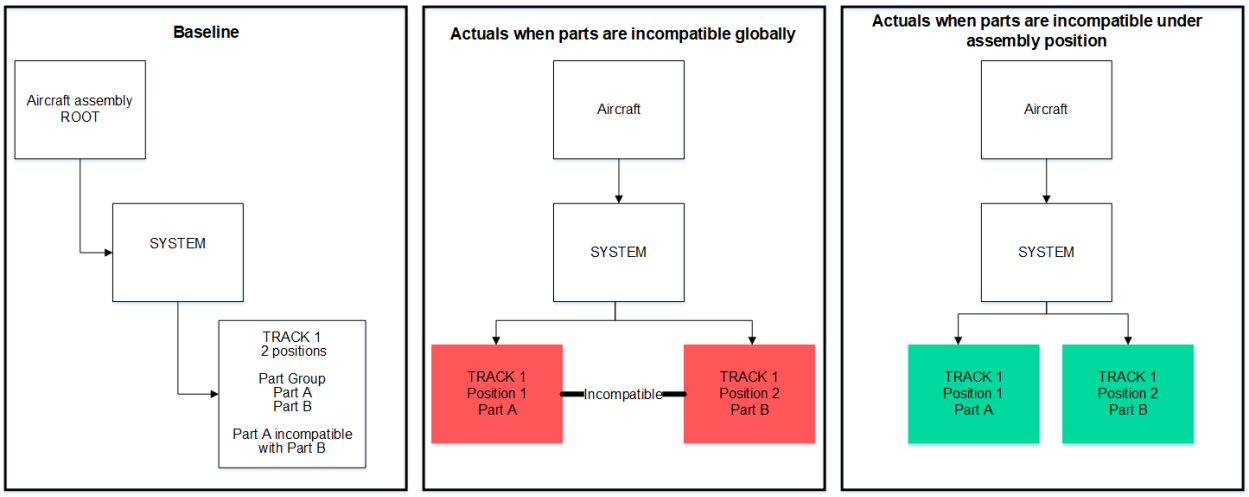

Part incompatibility example 1

Example two shows a variation in which Parts A and B are installed on tracked configuration slots that are on two different systems with the same outcome as in example one:

- If the incompatibility rule is the Global type, Part A and Part B are incompatible.
- If the incompatibility rule is the Assembly Position type, Part A and Part B are compatible.

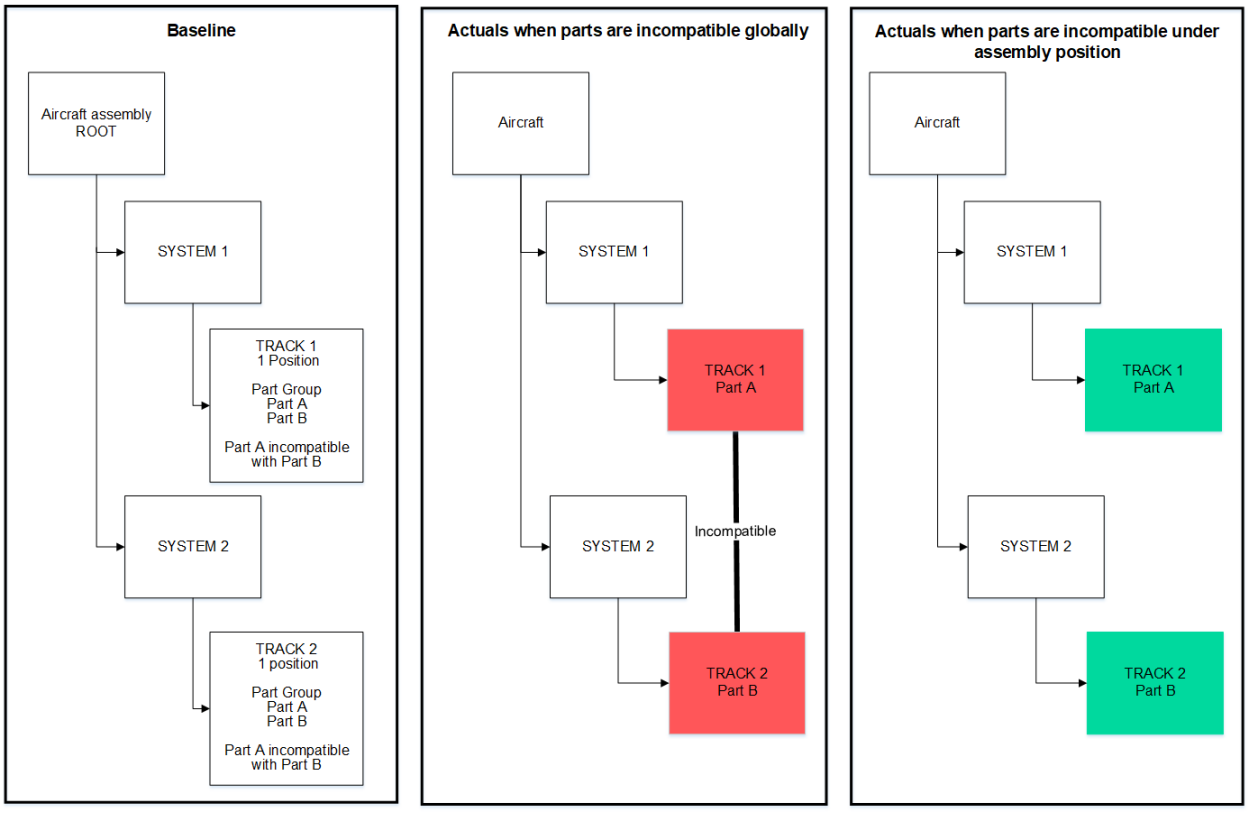

Part incompatibility example 2

In example three, the configuration hierarchy includes a sub-assembly configuration slot with two positions. Installing the sub-assembly on the aircraft assembly has the following compatibility outcomes:

- If the incompatibility rule is the Global type, Part A and Part B are incompatible.
- If the incompatibility rule is the Assembly Position type, Part A and Part B are compatible.

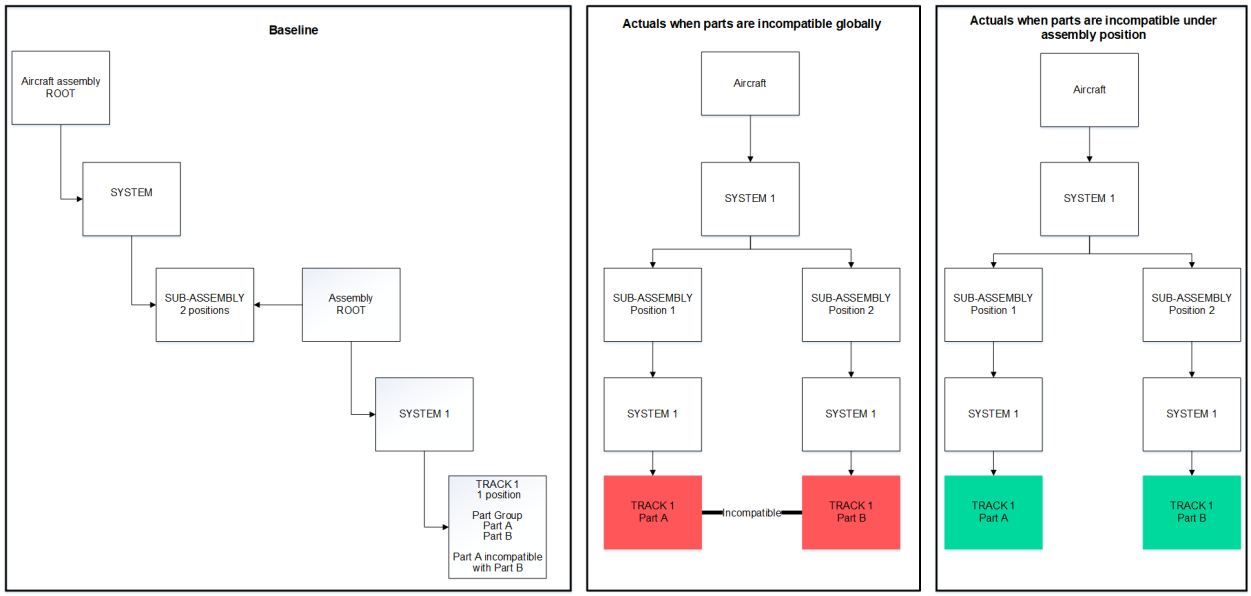

Part incompatibility example 3

Example four below extends example three. We now show a sub-assembly configuration slot with two positions and two systems underneath each. Parts A and B are installed on the two different systems, but under one sub-assembly the tracked slots on both systems have the same part installed and under the other sub-assembly, the tracked slots under the two systems have a mix of Part A and Part B.

- If the incompatibility rule is the Global type, Part A and Part B are incompatible. Only one part or the other can be installed anywhere on the aircraft.
- If the incompatibility rule is the Assembly Position type, Part A and Part B are incompatible when installed under the same assembly position.

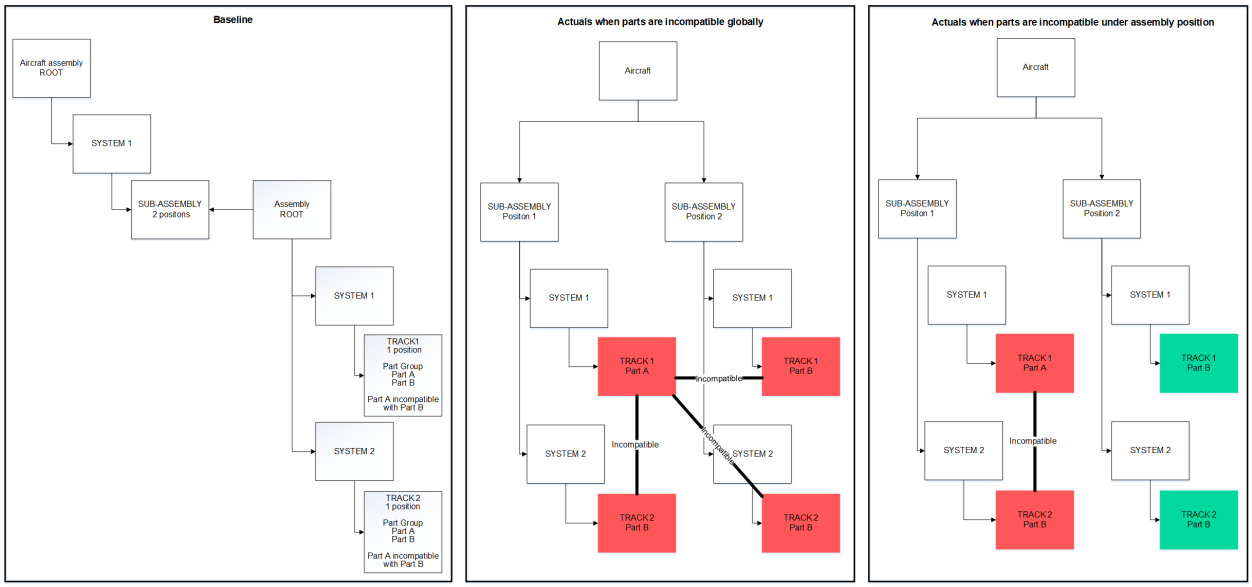

Part incompatibility example 4

In the examples, the root assembly is an aircraft, but if an engine assembly is loose, the root and highest assembly at that time, is engine sub-assembly.

Complex tracked part incompatibilities

The Part Incompatibility logic is eased when complex tracked parts are reserved, issued and installed.

Consider alternate tracked parts that are configured in the same part group such that child components installed on them are incompatible with each other's parents. Example: Emergency escape slides on aircraft: the slides are interchangeable, but the individual cartridges installed on the slides are not interchangeable.

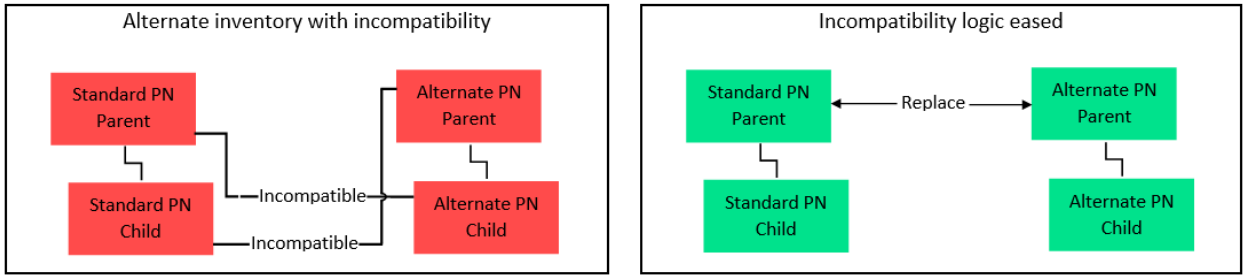

When an installed inventory is being replaced with an alternate inventory that is incompatible at the child level or below, CAMO allows users to add install part requirements for the alternate inventory when the incompatibility is on or under the configuration slot position being replaced. The same logic applies for reserving parts manually as well as automatically and completing installations.

CAMO also allows users to proceed with inventory creation when a sub-component standard part is incompatible with the parent, in many scenarios including when receiving a shipment, turning in an inventory, and capturing the work of removing or installing an inventory.

Task incompatibility

Task incompatibility rules specify which part numbers within groups of alternate part numbers cannot be installed based on the specified task and task status. When you create these rules, you select a task definition and specify whether the part number is incompatible when the task is complete or when the task is open. In the case of a modification, some parts in a part group will have a rule for when the task is open while other parts in the same part group will have a rule for when the task is complete.

Tip

Some pre-modification and post-modification incompatibility rules can be modeled as one-way interchangeability.

CAMO supports task incompatibility with tracked and serial-controlled parts.

Related tasks

Add incompatible part restrictions
Add incompatible task rules

Add conditional part applicability details

About this task

To add conditional part applicability details to a part group, complete the following steps.

Steps

1. On the **Part Group Search** page, enter the appropriate search criteria and click **Search**.
2. On the **Part Groups Found** tab, **Part Group** column, click the part group.
3. On the **Part Group Details** page, click the **Assigned Parts** tab.
4. Click **Edit Assigned Part Details**.
5. On the **Edit Assigned Part Details** page, provide the following information:
   - **Must Request Specific Part**: Select this check box to indicate that the user must select a specific alternate part when requesting the part group.
   - **Other Conditions**: Enter a description of the conditional information.
   - In the **Other Conditions** column of the **Alternate Parts** group box, select the check boxes for the alternate parts that have the special conditions.

6. Click **OK**.

Edit part applicability and interchangeability

About this task

When you edit the applicability range of a part group, CAMO checks for installed inventory that will be invalid after the change and provides a list of items that must be removed before you can proceed.

> **Note** Editing the applicability range of individual alternate parts will not run the validation.

Steps

1. On the **Part Group Details** page, select the **Applicability** tab.
2. Click **Edit Applicability**.
3. On the **Edit Applicability** page, provide the following information:
   - **Part Group**: Enter the applicability range for the whole part group.
   - **Alternate Parts**: If necessary, enter specific applicability ranges for individual parts. Enter NA if you want to designate the alternate part as not applicable.
4. Click **OK**.

Add incompatible part restrictions

Part incompatibility is a restriction that prohibits the installation of a specified part onto an assembly if another part is installed, even though both parts are valid parts. You can create global type or assembly position type part incompatibilities.

About this task

Examples of how you use the global and assembly type part incompatibilities: An aircraft could have either Pratt and Whitney or Rolls Royce engines installed, but it can't have one of each. To ensure an aircraft has all the same engines installed, you create global type incompatibility rules. You can use the Assembly position type to ensure that parts on an engine are compatible, while allowing multiple engines installed on an aircraft to have different (alternate) parts installed.

Steps

1. On the **Part Group Search** page, enter the appropriate search criteria and click **Search**.
2. On the **Part Groups Found** tab, **Part Group** column, click the part group.
3. On the **Part Group Details** page, click the **Incompatibility** tab.
4. In the **Part Incompatibility** area, select the part.
5. Click the **Add Part Incompatibility** button.

6. On the **Select Incompatible Part** page, provide search criteria and click **Search**.
7. Select a part and click **Assign Part**.
8. On the **Add Part Incompatibility** page, select the **Incompatibility Scope** and click **OK**.

> **Note** You cannot create Assembly Position type incompatibilities using aircraft part groups.

> **Tip** To remove an incompatible part restriction, do the following: Click **Remove Part Incompatibility**, then click **Yes**.

Related concepts

Part and task incompatibilities

Add incompatible task rules

About this task

CAMO lets you define compatibility rules between a part number in a part group and a task definition on that assembly. This compatibility feature lets you define whether or not a part number can be installed on a part group based on the status (open or complete) of a task on that assembly.

Steps

1. On the **Part Group Search** page, enter the appropriate search criteria and click **Search**.
2. On the **Part Groups Found** tab, **Part Group** column, click the part group.
3. On the **Part Group Details** page, click the **Incompatibility** tab.
4. In the **Task Incompatibility** area, select the part.
5. To add an incompatible task rule, do the following:
   a) Click **Add Task Incompatibility** .
   b) On the **Add Task Incompatibility** page, provide the following information:
      - Select **Incompatible With Complete Task** or **Incompatible With Open Task**.
      - **Task Definition**: Click to select for the valid task definition.

> **Tip** To remove an incompatible task rule, click **Remove Task Incompatibility**, then click **Yes**.

Related concepts

Part and task incompatibilities

Changing the inventory class of part numbers

You can change the inventory class that is assigned to a part number.

You can promote a part number to a higher inventory class to track more information about the part's inventory. You can also demote a part number to a lower inventory class.

Because the inventory class determines how CAMO deals with inventory, the ramifications of changing a part number's inventory class can be substantial. Therefore, the ability to makes such changes is controlled by permissions.

CAMO allows the following inventory class changes:

- Promoting a part from batch-controlled to serial-controlled.
- Promoting a part from serial-controlled to tracked.
- Demoting a part from tracked to serial-controlled.
- Demoting a part from serial-controlled to batch-controlled.

General restrictions

You cannot change the inventory class of a part number in the following cases:

- If a part has an inventory class of Assembly or Aircraft.
- If a part is no longer approved in your organization. A rejected part number has the status of Obsolete (Reject Part).
- If a part is associated with a stock number and the stock number also has other part numbers associated with it.
- If a part is associated with locked inventory items that are not archived or scrapped.

Promote batch-controlled parts to serial-controlled

You can change the inventory class of a part number from batch-controlled to serial-controlled to track items with serial numbers individually.

About this task

It is not possible to change a batch-controlled part to a serial-controlled part if any of the following are true:

- There are multiple pending transfers for the batch part in which the quantity is more than one.
- There are other part numbers assigned to the same part group as the batch part.
- There is a pending 'Return to Vendor' shipment associated with the batch part.
- There is a (non-historical) purchase order with received inventory for the part. The PO must be completed first.

Before changing a batch-controlled part to a serial-controlled part, verify the accuracy of the quantity of items for each batch, and make the necessary corrections to the inventory records.

Note The standard unit of measure for serial-controlled parts in CAMO is EA (each). CAMO creates individual serialized inventory records with new serial numbers and barcodes for the converted batch inventory.

Steps

1. On the **Part Search** page, provide search criteria, and click **Search**.
2. Select the **OEM Part No.** link of the part.
3. On the **Part Details** page, click **Change to Serialized**.
4. Click **OK**.

When you change a batch-controlled part to a serial-controlled part, CAMO does the following:

- Changes the inventory class of the part number, the associated stock number if any, and the part group.
- Changes the standard unit of measure for the part number and part group to the standard unit of measure for serial-controlled parts, EA (each).
- For each inventory record of the part:
  - Changes the inventory class to serial-controlled from batch-controlled.
  - Changes the standard unit of measure to EA (each).
  - Archives the inventory record for batch inventory with a bin quantity of zero.
  - Creates new inventory for the extra items in the batch, for each batch inventory record for which the bin quantity is greater than one.
  - Generates and assigns a unique serial number to each inventory record, including those that already existed for the batch, and all new records created for batches for which the bin quantity is greater than one.
  - Breaks all reservations for the inventory items and re-opens the associated part requests.
  - Initializes the current usage on the inventory records.
- If the part number has an associated stock number:
  - Changes the standard unit of measure for the stock number to EA (each).
  - Changes the standard unit of measure for all active, non-historical stock requests and consignment stock requests associated with the stock number to EA (each).
- Changes the standard unit of measure for all non-historical ad hoc part requests associated with the part or its part group to EA (each).
- Changes the standard unit of measure for all task part requests associated with the part to EA (each).
- Changes the standard unit of measure for all non-historical shipment lines associated with the part to EA (each).
- Adds the original standard unit of measure for the batch part as an alternate purchasing unit of measure for the part.
- Runs auto-reservation to try to fill the newly re-opened part requests.

The inventory records created for the now serial-controlled parts all have usage values of zero, and all of the records have a serial number generated by CAMO. It is recommended that you update the usage values and serial numbers on these inventory records. The details of the part number, such as its financial class, unit price or scrap rate, might also have to be updated.

Promote serial-controlled parts to tracked

About this task

To convert a serial part to a tracked part, you must assign it to a tracked part group.

If the part you are promoting is not moving to a tracked part group that already exists, you must create a new tracked configuration slot in the appropriate location on each assembly before promoting the part. A new system parent configuration slot might also be needed to put the tracked configuration slot in the correct location in the assembly hierarchy. After you have created the new tracked configuration, assign the usage parameters that you want to track to the new tracked configuration slot, and then create task definitions for the new tracked configuration slot, if required.

Tip To facilitate the follow-up work that is required after the change, create a report of the current location and parent inventory of all inventory matching the part number you are promoting. To create the report, from the Inventory Search page, search for all inventory for the part number, and export the results to Excel.

Steps

1. On the **Part Search** page, provide search criteria, and click **Search**.
2. Select the **OEM Part No** link to the part.
3. On the **Part Details** page, click **Change to Tracked**.
4. On the **Part Group Search** page, provide search criteria, and click **Search**.
5. Select the appropriate part group and click **Select Part Group**.
6. On the **Part Details** page, click **OK**.

When you change a serial-controlled part to a tracked part, CAMO does the following:

- Changes the inventory class of the part number.
- Adds the part number to the selected part group. If you created a new tracked configuration slot for the promoted part, the selected part group is the one that CAMO created automatically on the new configuration slot.
- Sets the part group and configuration slot position, and initializes the usage on each inventory record matching the part number. The inventory records retain only the usage history for the usage parameters that exist on the tracked part group to which the promoted part number is assigned.
- Detaches and archives any inventory that is installed on a parent component or assembly.
- Changes the inventory class of the stock number, and on the inventory records.

After the promotion of the part number, the updated inventory records for the parts installed on parent components or assemblies are archived and indicate that the inventory is not installed. You must perform the following corrections to the inventory records:

- Unarchive the inventory record and specify the location of each inventory item.
- Attach the inventory to the correct parent inventory.

You must also perform the following:

- Create a replacement task definition only if you created a new configuration slot for the tracked part.
- Initialize applicable task definitions.
- Adjust the details of the part number, such as the financial class and scrap rate.

Demote Tracked Parts to Serial-Controlled

About this task

When you demote a tracked part to a serial-controlled part, demote all of the alternate part numbers in the part's tracked part group, the part group itself, and the configuration slot where the serial part group belongs. You can do this from the **Config Slot Details** page, the **Part Group Details** page, and the **Part Details** page.

It is not possible to demote a tracked part to serial-controlled if any of the following are true:

- The tracked part number is assigned to more than one part group.
- The tracked part group of the part contains at least one other part that is assigned to other part groups.
- There are active task definitions on the configuration slot associated with the tracked part.
- The configuration slot associated with the tracked part has a sub-configuration slot.
- Any of the parts in the tracked part group are associated with stock numbers that also include part numbers that are not in the tracked part group.

Before converting a tracked part to a serial-controlled part, verify that the part does not meet any of the restriction criteria. You might have to remove parts from the part group and assign them to other part groups, reassign part numbers to different stock numbers, delete sub-configuration slots, or make task definitions obsolete.

Steps

1. On the **Part Search** page, provide the search criteria, and click **Search**.
2. Select the **OEM Part No.** link to the part.
3. On the **Part Details** page, click **Change to Serialized**.
4. On the **Change to Serialized** page, select the **Assembly and Config Slot**, and click **OK**.
5. On the **Part Details** page, click **OK**.

When you change the tracked part to a serial-controlled part, CAMO does the following:

- Converts the original tracked part group to serial-controlled, and moves it to the configuration slot you selected. If the original configuration slot where the tracked part group was located includes other non-tracked part groups, for example, batch or serial part groups, CAMO moves them to the new configuration slot as well.
- Removes the original configuration slot from the assembly.
- Changes the inventory class to serial-controlled for all part numbers that are in the new serial-controlled part group.
- For every inventory record for these parts:
  - Changes the inventory class to serial-controlled.
  - Breaks the reservation if the inventory is reserved.
  - Re-initializes the usage on the inventory if the new configuration slot tracks different usage parameters from the original.
  - Creates an auto-reservation request for the part at the inventory's location.

The quantity of the new serial-controlled part group is set to one, regardless of the number of configuration slot positions that existed on the original configuration slot for the tracked part. For example, if the configuration slot for the original tracked part has two positions, when the tracked part group is demoted to serial-controlled, the quantity in the serial-controlled part group is one. This does not prevent you from installing more than one part on parent inventory. To update the part group quantity to match the number of positions for the original tracked part, you must do so using a custom-developed script.

You might also have to adjust the details of the part numbers that were converted to serial-controlled, such as their financial class and scrap rate.

Demote serial-controlled parts to batch-controlled

You can change the inventory class of a part number from serial-controlled to batch-controlled to track items as a batch with a quantity.

About this task

You cannot change a serial-controlled part to a batch-controlled part if any of the following is true:

- There are other parts in the part group containing the serial-controlled part.
- The serial-controlled part has the financial type of rotable or repairable.
- There are open borrow orders against the serial-controlled part.

Note If the serial-controlled part is not repairable, you will be asked to pick a new standard unit of measure. The standard unit of measure for repairable parts is EA (each).

Steps

1. On the **Part Search** page, provide search criteria, and click **Search**.
2. Select the **OEM Part No.** link to the part.
3. On the **Part Details** page, click **Change to Batch**.
4. If you want to change the standard unit of measure, in the **Change to Batch** page, pick a new standard unit of measure for the part from the drop-down list.
5. Click **OK**.

When you change a serial-controlled part to a batch-controlled part, CAMO does the following:

- Changes the inventory class of the part number, the associated stock number if any, and the part group.
- For every inventory item for that part number:
  - Changes the inventory class on any inventory record for the part.
  - Assigns a unique batch number.
- If the inventory item is issued, but not yet installed, sets the batch quantity to zero.
- If the inventory item is installed, removes and archives the inventory.
- If the inventory item is not installed and id not issued, sets the batch quantity to one.
- Deletes the current usage on the inventory records.
- Cancels the reservations that exist for the part.
- Runs the auto-reservation feature to fulfill requests for the part.

The default conversion factor when a serial-controlled part with a standard unit of measure of EA is converted to a batch-controlled part is 1.0.

If you picked a new standard unit of measure in the **Change to Batch** page, CAMO:

- Changes the standard unit of measure for the part number and its part group to the new standard unit of measure.
- Changes the standard unit of measure for all non-historical ad hoc and task part requests associated with the part and its part group.
- Changes the standard unit of measure for all non-historical shipments associated with the part.
- If the part number has an associated stock number:
  - Changes the standard unit of measure for the stock number.
  - Changes the standard unit of measure for all non-historical stock requests and consignment stock requests associated with the stock number.
- For every inventory item for that part number:
  - Changes the standard unit of measure for the inventory record.
  - Changes the standard unit of measure for all non-historical transfers associated with the inventory.
- Adds the standard unit of measure for the serial-controlled part as an alternate purchasing unit of measure for the batch part.

Note When a serial-controlled part is demoted to a batch-controlled part, existing inventory records in CAMO will not be joined together. Existing inventory will continue to be recorded as individual inventory items with their own batch numbers and barcodes.

When CAMO has completed all of its steps, you must adjust the details of the part number, such as the financial class, unit price, and scrap rate.

Part group sensitivities

You can mark part groups as sensitive so all parts in the part group must be treated as such (regardless of which part in the part group is added as a part requirement).

Note that there are certain scenarios where both the system and part will be sensitive, or a system may not have a sensitivity but a TRK slot below it does. Also, removing or replacing a part on one system could trigger a sensitivity alert based on another system.

Consider the following setup:

```
22 (SYS) – Auto Flight – no sensitivity
   22-11 (SYS) – Auto Pilot – CAT III system sensitivity
      22-11-10-10 (TRK) - CAT III part sensitivity
   22-23 (SYS) – Yaw Damper System – no sensitivity
```

```
27 (SYS) – Flight controls - no sensitivity
   27-32 (SYS) – Stall Warning System – no sensitivity
       27-32-10-01 (TRK) Stall Management & Yaw Damper (SMYD) – CAT
 III part sensitivity
       Some other TRK part  – no sensitivity
```

```
27-32 (SYS) – CATIII
   27-32-01 (TRK 1) – CATIII
   27-32-02 (TRK 2)– no sensitivity
```

Consider the following scenarios:

Scenario 1: Alert based on system sensitivity

- Raise a fault on 22-11 (SYS). The system is CAT III sensitive, so a CAT III alert is displayed.

Scenario 2: Alerts for both the system and part requirement

- Raise a fault on 22-11 (SYS). The system is CAT III sensitive, so a CAT III alert is displayed.
- During the fault execution, you removed and installed 22-11-10-10 (TRK) and the part is CAT III sensitive. As a result, a CAT III alert is displayed.

Scenario 3: Alert based on a part requirement on a different system

- Raise a fault on 22-23 (SYS). The system is not CAT III sensitive, so an alert will not be displayed.

- However, during the fault execution, you removed and installed a Stall Management & Yaw Damper TRK part (SMYD) and the part is CAT III sensitive. As a result, a CAT III alert will be displayed.

Scenario 4: Alert based on part requirement only

- Raise a fault on 27-32 (SYS). The system is not CAT III sensitive, so an alert will not be displayed.
- However, during the fault execution, you removed and installed a Stall Management & Yaw Damper TRK part (SMYD) and the part is CAT III sensitive. As a result, a CAT III alert will be displayed.

Edit part group details

You can edit the details of a part group if you need to update the code, applicability range, sensitivities, and so forth.

Steps

1. Beside the CAMO logo, click the down arrow.
2. Click your your role menu, and then click **Part Group Search**.
3. Enter your search criteria, and click **Search**.
4. In the **Part Group** column, click the link for the part group.
5. In the **Details** area, click the **Edit Part Group** icon .
6. In the **Details** area, provide the required information. Note the following:
   - **Applicability Range**: Enter or edit the applicability range of the parts.
7. In the **Sensitivities** area, select the check boxes for the sensitivities you want to enable for the part group.
8. Click **OK**.

   You can view a log of any changes to this page on the History tab.

Related concepts

Part applicability

Set up alternate purchasing units of measure on a part number

About this task

Some vendors may use a different unit of measure for quantifying some part numbers. When purchasing such part numbers or updating the associated records, you would need to correlate the purchasing unit of measure with the standard unit of measure. You can set up alternate purchasing units of measure to facilitate this.

Steps

1. Find a part by doing one of the following:
   - On the **Part Search** page, enter your search criteria, click **Search**, and in the **OEM Part No** column, click the link.
   - On your to-do list, on any tab that lists parts, in the **OEM Part No** column, click the link.
2. On the **Part Details** page, **Details** tab, **Alternate Purchasing Units of Measure** area, click **Add Alternate Unit of Measure**.
3. On the **Add Unit of Measure** page, **Details** area, do the following:
   - In the **Conversion** field, enter a numerical value for the factor to convert the standard unit of measure to an alternate unit of measure.
   - From the drop-down list, select the alternate unit of measure.
4. Click **OK**.

Aircraft capabilities

Aircraft capabilities are a tool for summarizing the types of flights and services an aircraft is able to perform at the present time. Engineers configure aircraft capabilities, but maintenance controllers revise the current capabilities when required. For example, after deferring a fault, you reduce an aircraft's current ETOPS capability level.

To report an aircraft's capability, you must consider both its configured capability (what capability the aircraft has been built to embody), and what its current operating capability is (which factors in any temporary limitations). CAMO allows you to update both the configured and current capabilities of the aircraft. This information is useful for the users responsible for aligning aircraft tail numbers to flight numbers.

Note You can view any changes made to capabilities on the Inventory Details page on the Historical > Additional tab.

Related concepts

Viewing flight capability requirements

Related tasks

Assign or remove capabilities in aircraft assemblies
Set up capability levels of aircraft
Edit capability levels of aircraft

Assign or remove capabilities in aircraft assemblies

About this task

You can define which capabilities apply to a given aircraft. You can also remove previously assigned capabilities if they're no longer needed.

Steps

1. On your to-do list, **Assembly List** tab, click the required aircraft.
2. On the **Assembly Details** page, click the **Capabilities** tab.
3. Click **Assign Capabilities** to begin assigning capabilities to the aircraft.
4. On the **Assign Capabilities** page, click **Applicable Capability**.
5. Under **Applicable Capability Levels**, do one of the following:
   - To assign a capability, select the capability that applies to the aircraft and then select its appropriate capability levels and click **OK**.

     Note Other than the capability levels with boolean values (Yes/No), you must select at least one capability level for every selected capability.

   - To remove a previously assigned capability or capability level from an aircraft, deselect the capability or capability level and click **OK**.

     A warning message appears indicating the number of aircraft using the deselected capability or capability level. Click **YES** to continue.

Once the capabilities are assigned, their configured and current values can be set for individual aircraft. See, *Set up capability levels of aircraft*.

Related concepts

Aircraft capabilities

Set up capability levels of aircraft

After you have assigned the applicable capabilities to an aircraft assembly, you can set up the configured and current capability levels for each aircraft.

Steps

1. On your to-do list, **Fleet List** tab, click the required aircraft.
2. On the **Inventory Details** page, **Capabilities** tab, click **Edit Capability Levels**.
3. On the **Edit Capability Levels** page, select the configured level of the required capability under **Configured Level**.
4. Select or enter the current level of the required capability under **Current Level**.

Note The options available as current levels are in alignment with the configured levels. You cannot select a current level above the configured level. For example, if the configured seat count level is 137, then the current seat count level should be 137 or less.

5. Click **OK**.

Related concepts

Aircraft capabilities

Free text assembly capabilities

Free text values can be entered and preserved for both the Configured Level and Current Level on the aircraft Inventory Details page.

Steps

1. Go to the **Assembly Details** page of any ACFT assembly.
2. Open the **Capabilities** tab and click the **Assign Capabilities** button.
3. Check the required values on the list and click **OK**.
4. Go to the **Capabilities** tab of any aircraft on the same assembly as above and click the **Edit Capabilities** button.

You can enable and set current/configured levels.

Configuration baseline update management with Allowable Configuration

The configuration baseline defined for assemblies in CAMO generally requires updates with the release of a new IPC revision, service literature released by the OEM, or configuration change requests.

In conjunction with CAMO, you can use Allowable Configuration which is part of the Aviation Technical Content Manager portfolio. It works as follows:

Export configuration data from CAMO

A copy of the configuration baseline, for update, is obtained by exporting configuration data from CAMO. The exported configuration data contains the following:

- Assembly information
- Part group information
- Alternate part information
- Incompatible part information
- Incompatible task information

After the configuration baseline is loaded to Allowable Configuration, a configuration specialist can search for part groups on the **Part Group Search** page and view configuration data for a part group on the **Part Group** details page.

Create IPC document revision for assembly

When changes to the configuration baseline are deemed necessary, the configuration specialist creates an IPC change source in Allowable Configuration to serve as the base to which assemblies can be linked, in order to effect changes required to a specific assembly by a new IPC Document revision. In the event that the change source is an IPC Document, the configuration specialist creates the IPC Document in Allowable Configuration and links an assembly to it on the **Assemblies** tab of the **IPC Document** page. You can then upload the new IPC document revision and generate the baseline. When done, you can set the status of the document revision to Ready for Analysis so that it can be sent to the engineering service partner for analysis.

Review suggested changes

To determine the changes to configuration data as a result of a new IPC revision, the engineering service partner downloads the new revision along with the baseline. They then suggest changes to the part group configuration data, based on the information at hand. After the partner has finished adding changes, the IPC change suggestions file is uploaded to Allowable Configuration so a configuration specialist can view the suggested changes.

Enable part groups for changes

After a configuration specialist has identified the part groups impacted by the suggested changes, the part group should be connected to a change source if an existing part group requires a change or a new part group can be created. Once the change source is modified for a part group it becomes the active change source.

Action suggested changes

The configuration specialist sees the suggested changes on the **Suggested Changes** tab of the **Part Group** page. Each change receives a criticality which is indicative of the action that should be taken on the change. Criticality for change sets is as follows:

- Ones that must be reviewed.
- Ones that can be accepted.
- Ones for which you should perform spot checks.

After you determine the course of action for the change set, you must:

- Accept the suggestion. In the event that the suggested change is to create a new part group, accepting this change set creates the part group.
- Reject the suggestion.

- Set the suggestion to manually actioned to make changes manually.

You can also accept and reject all change sets for a particular change set type, for all the part groups on a change source, in a single operation. To bulk accept or bulk reject, the change set types must have either the Accept or Spot Check criticality.

Once you have actioned changes on the part group, they can be viewed as change steps, categorized by types such as mapping to IPC elements, taken against the part group on the **Action Log** tab for the part group.

Action changes due to other change sources

The configuration specialist can also action manual changes to part groups that result from other service literature. It should be noted that these changes may need to happen in the middle of an IPC update, and these changes will need to be published without inadvertently publishing elements of the IPC update. To action these changes, the configuration specialist needs to modify the change source for the affected part group to the Other type change source or create a part group for this change source. Manual changes can then be made on the part group, which can then be published.

Publish change source

After all the updates for a configuration change source are made, you can submit the change source for approval by setting the status to Ready for Approval. After it's approved, the change source is ready to be published. When the change source is published, all the valid changes to the configuration baseline are updated in CAMO. If all the changes on the change source were valid, the status of the change source is updated to Published. If some or all of the changes to the configuration baseline are invalid, the status of the configuration change source changes to PublishError and the changes that failed validation along with the description of the error are displayed on the **Publish Errors** page. You can then navigate to the part group details to rectify the error and publish the change source again.

Note For configuration information, see the Administration Guide.

Usage management

Usage parameters and usage definitions

Usage parameters are used to track how long equipment has been in service, based on a specific usage unit of measurement, such as airframe hours and cycles. Usage values are usually associated with an event, for example a flight.

Usage parameters are most important for components that get damaged or worn out from use—those that can crack from stress, impact, or fatigue due to moving parts. Usage parameters can be recorded as absolute counts, or as incremental counts (such as one more aircraft landing).

CAMO uses usage parameters to calculate the time between maintenance activities on the aircraft, and on its sub-components. For example, if an aircraft must be inspected every 100 hours of flying time, a usage parameter for flying hours is assigned to the assembly on which the aircraft is based.

CAMO includes standard usage parameters, such as HOURS and CYCLES, and lets you define as many additional usage parameters as your organization requires. Usage parameters are stored in a global list, and they can be assigned to any assembly.

To specify the usage parameters to track, you create *usage definitions* for each assembly. *Usage definitions* are groups of usage parameters, and they are used to categorize usage parameters based on the source of the usage data. The following table describes the data sources and how usage values are entered and updated for each one:

Data sources for usage definitions

Data Source	Description
BULK (Bulk Usage Entry)	This data source is for specifying the usage parameters that users must be able to enter in CAMO by creating a usage record or by editing an inventory's usage. It is also used for usage parameters whose values are sent to CAMO via an integration with external systems.
EDIT (Allows edition of data collection)	This data source is for parameters for historical flights that personnel in the technical records department enter manually in the CAMO interface.

Data Source	Description
MXFL (Maintenix Flight Log)	The source of the parameter values is either manual entry of the flight data in the CAMO interface, or an external flight monitoring system that is integrated with CAMO using the Maintenix Flight API. See the *Maintenix Flight API Guide* for more information about this type of integration. Note that only the parameters assigned to the MXFL data source are displayed to users when they create a flight record in CAMO.

Once a usage parameter is assigned to an assembly, you can assign that parameter to the various sub-configuration slots of the assembly, as required by the maintenance program. For example, if a component must be overhauled every 100 flying hours, the flying hours usage parameter is assigned to the sub-configuration slot to which the component is assigned.

By setting up the hierarchical structure of the assembly, you can assign usage parameters created for an assembly to any or all of its sub-assemblies and components to define the type of usage these sub-assemblies and components accrue, as illustrated in the following diagram. When the parent assembly accrues usage—for example when a flight occurs—CAMO applies the usage collected on the aircraft to each component, based on the usage parameters specified for each configuration slot in the assembly baseline.

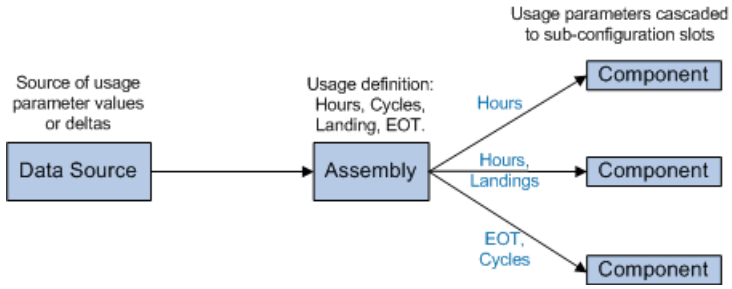

Usage parameters from top-level assembly to components

You can only cascade a parameter from the root of the assembly, which assigns the parameter to all configuration slots in the assembly hierarchy, or from any configuration slot, which assigns the parameter to all sub-configuration slots that are below the configuration slot. You can also manually assign any of the parameters in the assembly's usage definition to a specific configuration slot.

The usage parameters that are assigned to each assembly, sub-assembly, and component, should all be defined during the set-up of the aircraft in CAMO and before flights (with usages) are recorded against the aircraft. This is typical practice and best practice.

The usage values are recorded against the assembly on which the sub-assemblies and components are installed. The number and order of MXFL usage definition parameters displayed on various pages is configurable. For more information see the CAMO Administration Guide.

If a sub-assembly can accrue usage while it is not installed on the parent assembly, for example an engine can accumulate usage as the result of a bench test—and it has maintenance requirements that are scheduled based on usage—you want that sub-assembly to have its usage values even when it is removed from a parent assembly. In such cases, you must create a usage definition on the sub-assembly itself, and assign it the correct usage parameters. When the sub-assembly is installed on a parent assembly, CAMO tracks any additional usage parameters that come from the usage definition of the parent assembly, and that are assigned to the configuration slot where the sub-assembly is installed.

Forecast models let you define rates at which an aircraft, and any component that is installed on that aircraft, will accrue usage for a certain period of time. CAMO uses these rates to predict the usage-based maintenance deadlines.

Related concepts

Scheduling interval
Ways to record usage
Recording usage

Create usage definitions and parameters

About this task

CAMO uses usage parameters to calculate the time between maintenance activities on the aircraft, and on its sub-components.

To specify the usage parameters to track, you create usage definitions for each assembly. Usage definitions are groups of usage parameters, and they are used to categorize usage parameters based on the source of the usage data. All information that is used by a usage definition must come from a single data source.

Steps

1. On the **Assembly Details** page, **Usage** tab, click **Create Usage Definition**.
2. On the **Create Usage Definition** page, select the appropriate data source from the **Type** drop-down list and click **OK**.
3. Click the usage definition link to which you want to add the usage parameter.
4. On the **Usage Definition Details** page, **Parameter** tab, click **Create Parameter**.
5. On the **Create Parameter** page, provide the information requested, paying particular attention to the following fields and then click **OK**.
   - **Code**: Type a code to identify the parameter.
   - **Engineering Unit**: Select the engineering unit to use.

- **Precision**: By default, the **Precision** field contains a value of 0 that can be replaced with the actual precision value by the engineer. This value indicates the number of decimal places the value allows.

6. On the **Usage Definition Details** page, Parameter tab, click **Assign Parameter**.
7. On the **Assign Parameter** page, select the radio button for the parameter and click **OK**.
8. To unassign a usage parameter, on the **Usage Definition Details** page, select the radio button for the parameter to unassign from the usage definition and then click **Unassign Parameter**.

Once a usage parameter is assigned to an assembly, it can then be assigned to the various sub-configuration slots of the assembly, as required by the maintenance program. To add the new parameter to aircraft actuals, you need to click the **Synchronize Usage Parameters** button on the Assembly List tab.

Specify order of usage parameters displayed

By default, usage parameters in the MXFL usage definition are listed on the Create/Edit/Complete Flight pages and the Inventory Details tab and Historical sub-tab pages in alphanumeric order. If an aircraft or inventory item has a large number of usage parameters and if pilots or others manually update flights and enter usage values for only a sub-set of the parameters, you can order the list of usage parameters.

About this task

You can only change the list order of parameters in the MXFL usage definition. Parameters in other definitions that apply to an inventory item that you view, are displayed in alphanumeric order below the ordered list of MXFL parameters.

Steps

1. On the **Assembly List** tab, click an Assembly.
2. On the Assembly Detail page, click the **Usage** tab.
3. In the **Usage Definitions** area, click the MXFL usage definition.
4. Click **Reorder Parameters**.
5. Click a parameter, then click **Move Up** or **Move Down**. Repeat until the parameters are in the order that you want.
6. Click **OK**.

Configure format for entering and displaying usage hours

The USAGE_HOURS_AS_DECIMAL configuration parameter determines whether the hours-based TSN and Delta measurements for accrued usage are entered and displayed using decimal values or using hours and minutes on the Create Flight, Edit Flight, and Inventory Details, Historical Usage pages.

Set USAGE_HOURS_AS_DECIMAL to TRUE to enter and display the hours measurements using decimal values. Set it to FALSE to enter and display the hours measurements using hours and minutes.

Note This applies to any measurement parameter that uses HOUR (Hours) or HOURS (Operating Hours) as its engineering unit, regardless of the measurement name. If you're creating a custom measurement parameter in the MIM_DATA_TYPE table, the following columns must have these values for the HH:MM format to work:

- ENG_UNIT_DB_ID = 0
- ENG_UNIT_CD = HOUR or HOURS

Updating usage parameters on inventory records

When you add or remove usage parameters for a configuration slot for which inventory records already exist in CAMO, the inventory records must be updated to match the changes you make to the configuration slot. CAMO does not update the inventory records dynamically or automatically, because making changes to the usage parameters often entails making several successive changes, and it takes some time to select the select a parameter and the configuration slot to which it applies. It is preferable to update the inventory records only once, when the changes are completed, rather than doing so repeatedly while they are being done.

When you have finished making changes to the usage parameters on the assembly, click the **Synchronize Usage Parameters** button on the Assembly list tab to update all inventory records that match the assembly.

If users try to perform certain actions on the inventory after you have made changes to the assembly usage parameters, but before you have synchronized the inventory records, CAMO warns users that the parameters are out of sync with the baseline, and prevents users from continuing.

Calculated usage parameters

A calculated usage parameter is usage on an item which is calculated by CAMO using functions. These functions combine constants and input parameters, and they return a numeric value that is stored as the usage value. Therefore, the stored usage value is calculated by CAMO, instead of being entered by technical records. The input parameters are a subset of the standard usage parameters that are defined for the assembly.

Every time usage is adjusted on an inventory record, such as flights, usage records or editing inventory, the calculated usage parameters for that item will be re-calculated.

To calculate the usage value, CAMO uses the current TSN values of the input usage parameters as the input values for the function. The function also uses a list of constants that are defined

against the calculated usage parameter. You can specify part-specific constants that override the constant values of the calculated usage parameter, but only for the specified part numbers.

Whenever the function calculates usage for an inventory with that part number, the calculated usage value is obtained using the part-specific constants, rather than the default ones specified in the calculated usage parameter.

Once defined, you can cascade calculated usage parameters down to all sub-configuration slots using the **Cascade Parameter** button available at the root-level of the configuration slot, or assign them to specific configuration slots individually.

Define calculated usage parameters

About this task

You create calculated usage parameters on the top level configuration slot of an assembly—the root configuration slot. The input parameters you use in the calculated parameters must be part of the usage definitions of the assembly. Defining a calculated usage parameter consists of the following steps:

Steps

1. Develop an Oracle PL/SQL function that will do the calculation and add it to the CAMO database. This function must return the calculated usage value, and take all of the necessary input parameters and constants as inputs.

   Here is an example of a PL/SQL function:

   ```
   CREATE OR REPLACE FUNCTION calc_usage(aHours IN NUMBER, aCycles IN
    NUMBER, aConstant IN NUMBER) RETURN NUMBER IS
   BEGIN
   RETURN ( aHours * aConstant) / ( 2 * aCycles );
   END calc_usage;
   ```

   Contact your database administrator to add this function to the CAMO database
2. On your to-do list, **Assembly List** tab, click the required aircraft.
3. On the **Assembly Details** page, click the **Usage** tab and then click the **Create Calculated Parameter** button.
4. Provide the required information. Note the following:
   - **Engineering Unit**: Select the unit of measurement in which the calculated parameter value is recorded.
   - **Precision**: Enter the number of decimals that are stored for the parameter value.
   - **Database Function Name**: Enter the Oracle PL/SQL function name that was defined in step 1 above.

- **Calculation Description**: You can use this field to write out the equation, in math format, that is stored inside the Oracle PL/SQL function. It is descriptive only.

5. Click **OK**.
6. (Optional) On the **Calculated Parameter Details** page, under **Calculation Input**, add the following calculation inputs to the new parameter:
   - Use the **Add Constant** ⊞ button to add constants.
   - Use the **Assign Parameter** » button to add input parameters.

   Important The Calculation Input table must contain the exact same arguments in the exact same order as specified in the SQL function.

7. (Optional) To specify constants based on the part number of the inventory, under the **Calculation Input** table, use the **Define Part-Specific Constant** ⧉ button.

   If a part-specific constant is not specified, the default constant value in the Calculation Input table is used.

Create assembly measurements

About this task

You create an assembly measurement to allow the maintenance technicians to record the measurement values for several sub-components of an assembly on single job card. These sub-components should have the same assembly class and are installed in the parent inventory.

You can create an assembly measurement by selecting the ME (Measurement) domain type, and selecting the correct assembly class.

Steps

1. On the **Assembly Details** page, **Flight Measurements** tab, click **Create Measurement**.
2. On the **Create Measurement** page, provide the required information. Note the following:
   - **Code**: The code of the selected item.
   - **Engineering Unit**: Select the unit of measurement in which the finding is recorded.
   - **Precision**: The precision value indicates the number of decimal places that are stored when recording this measurement. Although the precision only affects numeric measurements, a precision value must be specified for all measurements.
   - **Domain Type**: Select Measurement (ME) for assembly measurements. This is a numerical value and has an engineering unit. Measurement data types let you record information like the number of passengers, the amount of oil consumed, or tire tread depth for tasks.
   - **Review Required**: Marking this check box makes sure that the measurement is displayed on the Pending Reference Approvals page for approval by MOC.

3. Click **OK**.

Assign and unassign measurements

About this task

If an assembly measurement already exists, it can be assigned to the aircraft assembly.

Steps

1. On the **Assembly Details** page, **Flight Measurements** tab, click **Assign Measurement**.
2. On the **Measurement Search** page, provide the search criteria and click **Search**.
3. On the **Measurements Found** tab, click the check box for the measurement that you want to assign.
4. Click **Assign Measurement**.
5. To unassign a measurement, on the **Assembly Details** page, **Flight Measurements** tab, click the check box for the required measurement and click **Unassign Measurement**.

Maintenance program management

Task definitions

Task definitions are the templates used to create actual tasks that are performed on applicable inventory items as these items age and accrue usage. The different types of task definitions serve different purposes, and they relate to one another.

You can establish links and dependencies between task definitions. The types of task definitions and the links allow you to model the complex relationships that make up an asset maintenance program.

In the user interface, when you see a button with *task definition* on it, the action is something that applies to all (or most) types of task definitions, such as activate, initialize, duplicate, delete, move, and obsolete. When you create task definitions, you create a specific type, so the buttons that you see are specific to the following types of task definitions:

Requirements (REQ)

You can use requirement definitions to describe maintenance activities at a high level, and provide scheduling information. This facilitates planning, scheduling, and compliance reporting. Examples of maintenance activities to model as requirements include the following:

- Maintenance activities that are part of maintenance programs for your assets.
- Work that must be accomplished to comply with a maintenance program document (MPD) from the equipment manufacturer, a service bulletin (SB), or an airworthiness directive (AD).

- Replacement activities in which a component is removed from an assembly—so that it can be sent to a shop for maintenance, for example—and replaced with another component.
- Troubleshooting work to resolve non-routine issues that are encountered regularly.

Requirements contain scheduling information, except for requirements created for replacement activities and corrective actions, which do not require scheduling because they are used only when needed rather than at specific intervals.

Reference Documents (REF)

Reference document definitions are often used to track compliance. In civil aviation for example, use reference documents to represent service bulletins (SB) or airworthiness directives (AD). You can link such reference documents to the requirement definitions that contain the execution information required to comply with the SD or AD, and that break down that information into several job card definitions. You can also create reference documents that are not linked to requirements, such as administrative reference documents for which no maintenance work is needed.

Reference document definitions are not initialized as active actual tasks.

Job Cards (JIC)

Job card definitions describe a unit of work that can be assigned to one or several technicians, and that completes a maintenance function. Job cards are the task definitions that specify the labor skills that are required, the parts and tools needed, the estimated duration of the maintenance task, and the steps and instructions for completing the work. Job cards are also where technicians sign off when the work is completed.

Job cards can be printed so that maintenance personnel can have them on hand as they execute the work.

Using job card definitions is optional; you can include the execution information listed above in requirement definitions—provided you designate these definitions as executable requirements—or create job cards that include some of the execution information and links to an external system that provides the work instructions for technicians.

Master Panel Cards (MPC)

Master panel card definitions list all aircraft panels that must be opened and closed during a maintenance visit. They differ from other types of task definitions in that CAMO automatically initializes them as actual tasks when you generate the workscope of a work package. When that happens, two job cards are created: one for opening panels and one for closing panels.

Blocks (BLOCK)

You create block definitions to group requirement definitions that have similar deadlines or that represent similar functions, such as overnight checks or heavy maintenance visits. Blocks are used to assist maintenance planners in scheduling a large number of requirements that would be difficult to manage without this type of grouping, such as heavy maintenance visits that can have

hundreds of requirements. You can also create block chains that contain several different block segments to execute in order. Blocks contain scheduling information.

Other than follow-on requirements, all classes of requirement definitions can be assigned to blocks.

Task definition types

When you create a task definition, you associate it with the configuration slot of the assembly that is relevant to the work being done, or with the part number of the component on which the work will be done.

Part number-based task definitions eliminate the need to define a task definition on each configuration slot where a component can be installed across all applicable assemblies. You can use part number task definitions for the following tasks:

- Maintenance requirements for components that are in storage.
- Modifications to components.
- Tracking compliance for components.
- Tracking shop visit maintenance requirements for components.
- Work that is required on tools, for example calibration.

Note You cannot link a part number task definition to a configuration slot task definition, and vice versa.

Part number task definitions are very similar to configuration slot definitions in that they can have links, scheduling rules, and so on. Also, when you activate a part number definition, baseline synchronization pushes out the new revision on applicable inventory. When a part number requirement is initialized, CAMO also initializes the associated job cards. However, there are differences between part number task definitions and configuration slot definitions:

- You can create part number type definitions for only requirements, job instruction cards, and reference documents.
- Blocks and Master Panel Cards (MPCs) apply only to assemblies and are therefore created on config slots. You cannot create them for part numbers.
- Part number task definitions cannot be used in the Long Range Planner (LRP) application.
- Troubleshooting (CORR) task definitions and replacement (REPL) task definitions cannot be or include part number task definitions.
- Part number based task definitions will have their applicability and modification restrictions enforced when actual tasks are created using the **Create Historical Task** workflow (in contrast to tasks created against configuration slots).
- Part number task definitions on BATCH parts cannot have scheduling rules.
- The CAMO compliance report is not available for part number task definitions.

Note For configuration slot task definitions, the task definition codes you assign must be unique only on a given configuration slot. For part number task definitions, task definition code must be unique across the CAMO system.

You should use configuration slot-based task definitions whenever you need to use any of the CAMO functionality that does not apply to part number task definitions.

Note It is recommended to use configuration slot requirements rather than part number requirements because IFS Maintenix cannot include part number requirements in the aircraft's maintenance program.

Historical modification tasks

Whenever you reinduct inventory, it is important that you record which tasks have been previously completed. If the part was previously in the organization, some tasks may have been completed when the part was previously in CAMO in a non-archived state. However, if the part has been away from your organization for awhile, it is possible that some tasks that were completed on the part have not been recorded as completed in CAMO.

If a task definition has not been completed in CAMO, you can use the Create Historical Task button to record historical tasks.

It is possible that the part might have undergone a modification and changed part numbers while it was not in your organization's possession. This means it is possible that you can receive inventory that is not currently the same part number as it used to be.

When you are creating historical tasks, applicability rules and transformation rules are enforced for tasks based on part numbers and are ignored for tasks based on configuration slots. This means that when a receiving inspector has received an item and is trying to enter configuration slot based historical maintenance on the item, they can use the same workflow even if the tasks were performed on a different part number.

CAMO allows you to create historical MOD tasks, even if the inventory's part number does not match the Old Part Number of the Part Transformations list of the MOD task definition. The part transformation logic does not run when you create a historical MOD task (since the transformation has already happened).

In addition, you can create a historical configuration slot based modification task even if it does not match the inventory's current task applicability rules. Although the task is not currently applicable to the inventory item, it was applicable when the task was performed, so therefore, you are able to initialize these tasks. CAMO allows historical tasks to be initialized even if they do not match applicability, but includes a warning message about the same

Related concepts

Task applicability
Unarchiving and reinducting inventory

Task definition life cycle

When you first create a task definition in CAMO, it has the Build status. While it remains in the Build status, you can make modifications to the task definition, no actual tasks can be created from the definition.

When the task definition is complete, and has received the approval required by your organization, you activate the task definition, which changes its status from Build to Active. Active task definitions can be used to create actual tasks against inventory. In CAMO, you can define the approval process for task definitions to suit the needs of your organization. For example, you can decide that multiple approvers review and approve a task definition prior to the activation. At a high level, the process is that the user who creates or revises a task definition requests its approval; approvers review the task definition, and they approve it or reject it.

Initializing a task definition creates actual tasks for the inventory to which the task definition applies. Only the active revision of a task definition can be initialized, unless the task definition is assigned to a maintenance program. Initialization can occur automatically or be done manually. For example, most blocks and requirements are initialized automatically by CAMO; however, block and requirement definitions that are designated as being on-condition must be initialized manually. Active job cards are automatically initialized when their parent requirement is initialized.

When you create and activate a task definition for the first time, it is considered Revision 1 in CAMO. When you need to change an active task definition, you create a revision of the task definition. There are now two revisions (versions) of the same definition, one in ACTIVE status which continues as the basis for actual tasks and one in REVISION status which you can change. When your changes are done and approved, you activate the version that's in REVISION status. It becomes REV 2 ACTIVE. REV 1 ACTIVE changes to SUPERSEDE status and actual tasks are now based on REV 2 ACTIVE.

As you create, revise, and no longer need task definitions, you can do the following:

- Delete Requirement: If a requirement is still in BUILD status, you can delete it from the requirement's Details page.
- Obsolete Task Definition: If a task definition is in REVISION status, you can make it obsolete (its status changes to OBSOLETE). You can obsolete multiple definitions at the same time from the Task Definition Search page.

You can also move and duplicate task definitions with one exception - you can't move master panel card definitions because they are specific to assemblies.

The following diagram illustrates the various status transitions for task definitions.

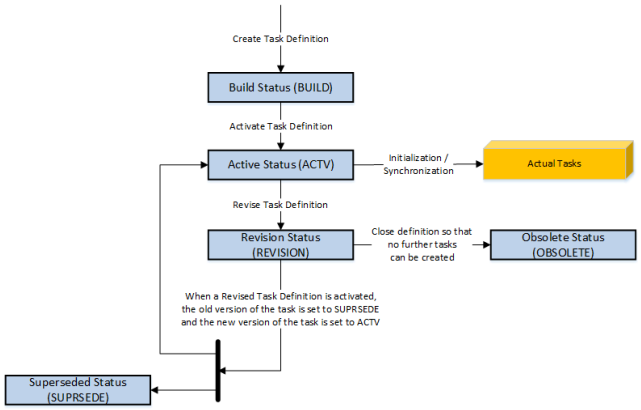

Task definition life cycle

Task definitions can be revised many times, but only one revision can be active at any time. When you create and activate a new revision of a task definition, the status of the previous revision is changed to Superseded, as shown in the following diagram.

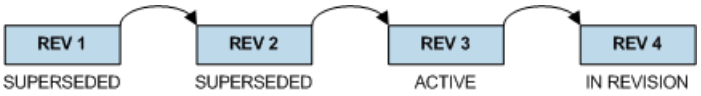

Task definition revisions

View differences between two versions of a task definition

You can compare one revision of a task definition with any of its other revisions. The Show Differences button on the details page of the task definition provides this functionality.

Steps

1. Navigate to the details page of the task definition revision you want to use for comparison.

   To start with a revision different than the current one, on the details page of the task definition, click the **Revision** tab and then click the required revision under the **Revision History** area.
2. Click the **Show Differences** button.
3. On the **Show Differences** page, select the revision to be compared to the previously selected revision.
4. Click **OK**.

All the differences between the two selected revisions are highlighted in yellow. To hide these highlights, click the Hide Differences button.

Job card definitions

The purpose of a job card definition is to convey how to perform the work, or some of the work, that is required to satisfy a maintenance requirement, including:

- Work instructions, consisting of the detailed sequence of steps needed to complete the task.

  If your organization has an external system that includes the instructions, for example in the aircraft maintenance manual (AMM), you can add links to that system in the job cards in CAMO, so that maintenance personnel access the instructions in the external system.
- Supporting information such as technical reference links to external documentation, diagrams, or other instructional aids.
- Resources that are needed, including the number of technicians, their skills, the tools, the parts, and whether the work done by each technician must be certified by another user and undergo an independent inspection.

Once you have created a job card, you can preview it as a PDF document, and print the job card.

When you create a job card definition, you assign it a class. The job card definition classes provided in CAMO are described in the following table.

Job card definition classes

Class	Description
Clean (CLEAN)	A task to clean equipment.
Close (CLOSE)	A task for closing a panel or area when the work is completed. This task class is used for heavy maintenance work packages, and the actual tasks are scheduled at the end of the work package.
Close Panel (CLOSEPANEL)	Provides instructions on how to close a specific panel on the aircraft, as well as parts and tools requirement. The aircraft zone and panel are specified in the task definition.
Inspection (INSP)	Identifies a preventative maintenance action.
Install (INST)	A task for installing a component, this is usually a subtask to a replacement requirement (REPL).
Job Card (JIC)	A generic job card task that does not relate to the other job card classes listed in this table.
Open (OPEN)	A task for opening a panel or area when the work starts. This task class is used for heavy maintenance work packages, and the actual tasks are scheduled at the beginning of the work package.
Open Panel (OPENPANEL)	Provides instructions on how to open a specific panel on the aircraft, as well as parts and tools requirement. The aircraft zone and panel are specified in the task definition.

Class	Description
Approved Repair (REP)	Identifies a repair task where the work needed to make a component serviceable requires the physical alteration of the component.
Removal (RMVL)	A task for removing a component, this is usually a subtask to a replacement requirement (REPL).
Servicing (SRVC)	Routine tasks during which some equipment is being serviced; calibrating a tool is an example.
Test (TEST)	Work that results in some equipment being certified as being airworthy or serviceable.

Like other types of task definitions in CAMO, you can do the following for job card definitions:

- Create them for a part number or for a configuration slot. While a configuration slot job card definition is still in the Build status, you can move it to a different configuration slot.
- Assign them an organization.
- Include non-routine estimation information.
- Add task impacts, and Interactive Electronic Technical Manuals (IETM) references and attachments.
- Activate, make revisions, and make them obsolete. However, you cannot initialize job cards individually; they are initialized when their parent requirement task definition is initialized.
- Assign them to requirement definitions, and remove them from requirement definitions.
- Specify applicability ranges or rules to restrict the inventory to which the job card applies.
- If you add steps to a job card, you can do the following:
  - Specify applicability ranges for individual steps. (Different steps within one job card can have different applicability ranges).
  - Add skills to job card steps.

You cannot set scheduling information in job cards; job cards inherit the scheduling information from their parent requirement definition.

Related concepts

Step skills on tasks and faults

Create a job card definition

Steps

1. Select the **Task Definition Search** menu item.

2. On the **Task Definition Search** page, click **Create Job Card**.
3. On the **Create Job Card** page, in the **Job Card Type** area, select **Config Slot**.
4. In the **Identification** area, provide the required information. Note the following:
   - **Assembly**: Select the type of aircraft to which the job card definition applies.
   - **Config Slot**: Click and select the configuration slot to which the job card definition relates.
5. In the **Classification** area, provide the required information. Note the following:
   - Class:
     - If the job card provides information for opening an aircraft panel, select **OPENPANEL** (Open Panel JIC).
     - If the job card provides information for closing an aircraft panel, select **CLOSEPANEL** (Close Panel JIC).
     - For other types of work, select the class that is most closely matched to the work, or select the generic **JIC** (Job Instruction Card) class.
6. In the **Planning Details** area, you can select one or more work types that apply to the job card definition. Hold Ctrl as you click to select multiple work types.
7. Click **OK**.

   The job card definition is created and is in Build status.

What's next

You must activate a job card definition before you can use it. However, before activating, you might want to add instructions, part and tool requirements, and other details for technicians, and associate the job card definition to a requirement definition.

Allowable HTML tags for large text fields

CAMO allows you to use a list of HTML tags in large text fields. This allows you to create notes, descriptions, and instructions that are richly formatted for easier reading. Any HTML tags that are not allowed will be simply display as text.

The following HTML tags and their appropriate attributes are allowed in large text fields in CAMO:

Allowable HTML tags for large text fields

Tag	Description
<a>	For hyperlinks. Links can point to `http, https, ftp, and mailto`. This tag has an enforced `rel=nofollow` attribute.
<b>	For bold text.
<cite>	To display a citation.

Tag	Description
<code>	To display computer code.
<blockquote>	To display text quoted from external sources.
<q>	To display a short quotation.
	For text that has stress emphasis.
<i>	To italicize text for technical terms, phrases, etc.
<small>	To display text with a smaller size.
	To apply a style to a phrase.
<strike>	To display strike-through text.
	For important text.
<sub>	For subscript text.
<sup>	For superscript text.
<u>	For underlined text.
 	Creates a line break.
<dl>, <dt>, <dd>	To define a description list, a description term, and description of the term in a list. <dl>, <dt>, and <dd> are often used together.
<p>	To separate paragraphs.
, ,	To define ordered or unordered lists and their list items.
<pre>	To define pre-formatted text. Usually used with the *width* attribute.
<table>	To define a table.
<th>	To define a table header cell.
<td>	To define a table cell.
<tr>	To define a table row.
<caption>	To define a table caption.
<colgroup>, <col>	To specify column properties.
<thead>, <tbody>, <tfoot>	To group header, body, and footer content in a table

The following HTML tags are not allowed in large text fields in CAMO:

- <img> tag and its attributes

Revise a job card

If the job card definition already exists, these steps are executed to put it into a revision (editable) status. You can then perform any of the instructions provided below; they apply to both creating a new job card, and revising an existing one.

Steps

1. On your to-do list, click **Job Cards Search**.
2. On the **Job Card Search** page, provide the following information:
   - Select **Search by assembly/code**.
   - Enter the assembly of the job card to be revised.
   - Enter the code of the job card to be revised.
3. Click **Search**.
4. In the **Job Card** column, click the link.
5. On the **Job Card Details** page, click **Create Revision**.
6. On the **Create Revision** page, enter the name of the contact person for the revision, the reason for the revision, and any note you see fit.
7. Click **OK**.

Add technical references to a job card

About this task

You can add one or more technical references to link the job card to information that resides in an external document management system. Printable technical references are automatically printed with the task cards created based on the job card. When you have two or more technical references, you can change their order on the job card.

Steps

1. On the **Job Card Details** page, click the **Details** tab.
2. Click **Add Technical Reference**. The IETM Search page opens with the buttons related to Technical References.
3. On the **IETM Search** page, in the **Search Criteria** area:
   - Select **Search for technical references by name** or **Search for technical references by operator**.
   - **IETM**: Select the reference.

- **Name**: Enter the name of the IETM. This field is displayed if Search for technical references by name is selected.
- **Operator**: Select the operator. This field is displayed if Search for technical references by operator is selected.

4. Click **Search**.
5. On the **Technical References** tab, select the check boxes next to the required references.
6. Click **Assign Technical Reference**.

Add attachments to a job card

About this task

If you do not have an external document management system with which you can link the job card, you can attach documents that provide information to technicians. Printable attachments are automatically printed with the task cards that are created based on the job card. If you add two or more attachments, you can change the order in which they are listed on the job card.

Steps

1. On the **Job Card** or **Requirement Details** page, **Details** tab, click **Add Attachment** ⊞. The IETM Search page opens with the buttons related to Attachments.

> **Note** The size of the attachment must be smaller than the configured file size. The default size of the file that can be attached is 10MB. Contact your administrator if you do not know what your configured file size is.

2. On the **IETM Search** page, **Search Criteria** area:
   - Select **Search for attachments by name** or **Search for attachments by operator**.
   - **IETM**: Select the reference.
   - **Type**: Optional. Select the type of reference.
   - **Name**: Enter the name of the IETM. This field is displayed if **Search for attachments by name** is selected.
   - **Operator**: Select the operator from the drop-down list. This field is displayed if **Search for attachments by operator** is selected.
3. Click **Search**.
4. On the **Attachments** tab, select the check boxes next to the required attachments.
5. Click **Assign Attachment**.

Add labor requirements

About this task

You add labor requirements to task card definitions, or to executable job standard definitions.

Steps

1. If it is not already displayed on your screen, go to the details page of the task definition.

   > **Tip** To go to the details page, select the **Task Definition Search** menu item. The fastest way to find the task definition is to enter its complete code (or only the first few characters of the code) and press Enter.
   >
   > Alternatively, you can select the type of aircraft the definition pertains to in the **Assembly** field, the class of the definition, and/or the status of the definition. After searching, click the desired code/name on the Task Definitions Found tab to go to the details page.

2. On the details page of the task definition, click the **Execution** tab.
3. Click **Add Labor Requirements** .
4. On the Add Labor Requirements page, provide the following information, and click OK:
   - **Labor Skill**: The labor skill required to complete this labor requirement. The list of skills from which you select only includes the skills assigned to the organization of the task card definition.
   - **Number of People Required**: The number of resources who have the specified labor skill and that are required to complete the work.
   - **Work Performed Sched. Hours**: The expected number of hours per resource required.
   - **Certification Required**: Select if this work requires certification when it is complete. When it is required, the labor row is not complete until it is certified.
   - **Certification Sched. Hours**: The number of hours that the certification takes to complete.
   - **Independent Inspection Required**: Select if this work requires independent inspection when it is completed. When it is required, the labor row is not complete until it is inspected.
   - **Independent Inspection Sched. Hours**: The number of hours that the independent inspection takes to complete.

Add part requirements to job cards

About this task

You add part requirements to identify the rotables and consumables required to complete a task. You add part requirements to job card definitions or to executable requirement definitions.

Steps

1. On the **Details** page of the task definition, click the **Execution** tab.
2. Click **Add a Part Requirement** ⊞.
3. On the **Add Part Requirement** page, enter the applicable search criteria.
4. Click **Search**.
5. On the **Parts Found** tab, select the parts to add as part requirements.
6. For each part, select the applicable options:
   - **Qty**: Enter the quantity needed for the part.
   - **RM**: Select to indicate that a part like this one will be removed as part of the task.
   - **IN**: Select to indicate that the part is to be installed as part of the task.
   - **Action**: Select whether CAMO should create a part request for the part requirement or not, whether the required part is included in a kit, or usually kept as bench stock.
   - **Position**: If the required part is for a configuration slot with multiple position, select the correct position.
   - Under **Alternate Part List**, if there are several alternate part numbers to choose from, you can select a specific part.
7. Click **Assign Selected Parts To Task Definition**.

Add measurements to job cards

About this task

Specify the measurements that the maintenance technician should record while executing the task. You can add measurements to job card definitions or to executable requirement definitions.

Steps

1. On the **Details** page of the task definition, click the **Execution** tab.
2. Click **Assign Measurements**.
3. On the **Measurements Search** page, enter the applicable search criteria.
4. Click **Search**.
5. Select applicable measurements from the search results, and click **Assign Measurement**.

Add tool requirements

About this task

List the tools required to complete the task. You can add tool requirements to task card definitions or to executable job standard definitions.

Steps

1. If it is not already displayed on your screen, go to the details page of the task definition.

> **Tip** To go to the details page, select the **Task Definition Search** menu item. The fastest way to find the task definition is to enter its complete code (or only the first few characters of the code) and press Enter.
>
> Alternatively, you can select the type of aircraft the definition pertains to in the **Assembly** field, the class of the definition, and/or the status of the definition. After searching, click the desired code/name on the Task Definitions Found tab to go to the details page.

2. On the details page of the task definition, click the **Execution** tab.
3. Click **Add Tool Requirement** ⊞ .
4. On the **Add Tool Requirement** page, enter your search criteria.
5. Click **Search**.
6. Select applicable tools from the search results, and enter how long each tool is needed in **Scheduled Hours**.
7. Click **Assign Selected Tools to Task Definition**.

Add aircraft zones and panels

About this task

In task definitions, you can identify the aircraft zones and panels where the work covered by the task occurs. You can add zones and panels to task card definitions or to executable job standard definitions.

Steps

1. If it is not already displayed on your screen, go to the details page of the task definition.

> **Tip** To go to the details page, select the **Task Definition Search** menu item. The fastest way to find the task definition is to enter its complete code (or only the first few characters of the code) and press Enter.
>
> Alternatively, you can select the type of aircraft the definition pertains to in the **Assembly** field, the class of the definition, and/or the status of the definition. After searching, click the desired code/name on the Task Definitions Found tab to go to the details page.

2. On the details page of the task definition, click the **Zones/Panels** tab.
3. Click **Add Zone** ⊞ .
4. On the Add Zone page, select applicable zones, and click OK.
5. Click **Add Panel** ⊞ .

6. On the Select Panel page, enter the applicable search criteria.
7. Click **Search**.
8. Select applicable panels from the search results, and click OK.

Add task steps to job card and executable requirement definitions

You can add task steps to job card definitions and executable requirement definitions. When the actual task is in work, the steps must be completed to complete the task. Adding skills to job card step allows technicians to record sign off on job card steps per skill.

Prerequisite

- The job card definition must be in the BUILD or REVISION status to add job card steps.
- To add skills to job cards steps, you must have labor requirements, with certification required, on the job card definition for those skills.

About this task

You can specify an applicability range for each step. Different steps in one job card definition can have different applicability ranges. Unlike other applicabilities, the applicability range for job card steps is applied when the work packages that contain the actual job cards are committed, when the tasks are put into committed work packages, or when a job card in a committed work package is updated to the latest revision. For more applicability range information, see *Task applicability*.

You can also add skills to job card steps while the job card or executable requirement is in Build or Revision status. This allows technicians to sign off on job card steps for each required skill when completing labor rows. When adding skills to steps either all steps must have at least one skill or none of the steps have skills assigned.

The skills that you can add to the job card steps correspond to the labor requirements. The labor row must be marked as Certification Required in order to add the corresponding skill to the job card step. For each skill that you add, you can indicate that an independent inspection is required if the corresponding labor row requires independent inspection. Additional validations are in place, on both the task definition and the actual, to keep the skills on the steps aligned with the labor rows. Step skills cannot be added to actuals.

Using job card step skills allows you to record certification on steps per skill, otherwise skills are certified at the job card level.

Note Skills cannot be added to steps on ad hoc tasks or faults.

Steps

1. On the **Details** page of the job card definition or executable requirement, click the **Execution** tab.

2. In the **Job Card Steps** or **Steps** area, click **Add Step**.
3. On the **Add Step** page, do the following:
   a) (Optional) Enter the applicability range for the step.
   b) (Optional) Under **Certifying Skill(s)**, click **Required for this Step** to require a skill on this step, and/or **Requires Independent Inspection** to require an inspection by a technician who did not perform the work.
   c) Enter a description of the work the technician must do.
4. (Optional) Do any of the following:
   - In the **Applicability Range** column, enter applicability codes.
   - In the **Predefined Step Descriptions** list, select quick text and then edit it in the **Description** field (if required).
5. Click **OK**.

Select work condition settings

Work conditions are used to indicate the state an aircraft must be in before work can be performed. For example, an airplane must have its power turned off before work can be performed on its electrical systems.

Steps

1. On the **Job Card Details** page, click the **Execution** tab:
2. Click **Edit Conditions**.
3. On the **Edit Work Conditions** page, select the setting for each condition that applies to the task.
4. Click **OK**.

> **Note** In Production Planning and Control (PP&C) you can set filter criteria options to display tasks that can only be performed when an aircraft is in a specific work condition.

Related concepts

Filter Criteria dialog box options

Assign job cards to a requirement

Steps

1. On the **Job Card Details** page, click the **Requirements** tab.
2. Click **Add Job Card to Requirement**.

3. On the **Add Job Card to Requirement** page, type the requirement code in the **Requirement** field, or click to search for the requirement.
4. Click **OK**.

Activate a job card definition

You activate a job card definition when it is complete, associated with the correct requirement definition, and ready for use.

About this task

Use the following steps to activate one job card.

> **Note** To activate multiple job card definitions at the same time, do a Task Definition Search, select one or more definitions and click Activate Task Definition.

Steps

1. On the **Job Card Details** page of the appropriate job card definition, click **Activate Job Card**.
2. On the **Activate Job Card** page, provide the information requested, and click **OK**.

> **Note**
>
> After you activate job card definitions, it can take up to an hour before actual tasks are created.

Create open and close panel job card definitions

About this task

You create job card definitions for opening and closing a panel if master panel card (MPC) task definitions exists for the aircraft type.

When a work package for the same aircraft type and same work type as the MPC task definition is committed, CAMO automatically creates the job cards to open and close the panels that are referenced in the other tasks in the work package, and includes the information that is in the corresponding open and close panel job card definitions.

You can create individual job card definitions for each panel, or use the same job card definition for several panels.

Steps

1. Select the **Task Definition Search** menu item.
2. On the **Task Definition Search** page, click **Create Job Card**.

3. On the **Create Job Card** page, in the **Job Card Type** area, select **Config Slot**.
4. In the **Identification** area, provide the required information. Note the following:
   - **Assembly**: Select the type of aircraft to which the job card definition applies.
   - **Config Slot**: Click and select the configuration slot to which the job card definition relates.
5. In the **Classification** area, provide the required information. Note the following:
   - **Class**:
     - If the job card provides information for opening an aircraft panel, select **OPENPANEL** (Open Panel JIC).
     - If the job card provides information for closing an aircraft panel, select **CLOSEPANEL** (Close Panel JIC).
     - For other types of work, select the class that is most closely matched to the work, or select the generic JIC (Job Instruction Card) class.
6. In the **Planning Details** area, you can select one or more work types that apply to the job card definition. Hold Ctrl as you click to select multiple work types.
7. Click **OK**. The job card definition is created and is in **Build** status. You must activate a job card definition before you can use it. However, before activating, you might want to add instructions, part and tool requirements, and other details for technicians, and associate the job card definition to a requirement definition.

Add zones and panels to tasks

About this task

Identify the aircraft zones and panels where the work covered by the task occurs. You can add zones and panels to job card definitions or to executable requirement definitions.

Steps

1. On the details page of the task definition, click the **Zones/Panels** tab.
2. Click **Add Zone** .
3. On the **Add Zone** page, select applicable zones.
4. Click **OK**.
5. Click **Add Panel** .
6. On the **Select Panel** page, enter the applicable search criteria.
7. Click **Search**.
8. Select applicable panels from the search results.
9. Click **OK**.

Add labor requirements

About this task

You add labor requirements to job card definitions, or to executable requirement definitions.

Steps

1. On the details page of the task definition, click the **Execution** tab.
2. Click **Add Labor Requirements**.
3. On the **Add Labor Requirements** page, provide the following information:
   - **Labor Skill**: The labor skill required to complete this labor requirement. The list of skills from which you select only includes the skills assigned to the organization of the job card definition.
   - **Work Performed Sched. Hours**: The expected number of hours.
   - **Certification Required**: Select if this work requires certification when it is complete. When it is required, the labor row is not complete until it is certified.
   - **Certification Sched. Hours**: The number of hours that the certification takes to complete.
   - **Independent Inspection Required**: Select if this work requires independent inspection when it is completed. When it is required, the labor row is not complete until it is inspected.
   - **Independent Inspection Sched. Hours**: The number of hours that the independent inspection takes to complete.
4. Click **OK**.

Add part requirements

About this task

You add part requirements to identify the rotables and consumables required to complete a task. You add part requirements to job card definitions or to executable requirement definitions.

Steps

1. On the **Task Definition Details** page, click the **Execution** tab.
2. Click **Add a Part Requirement**.
3. On the Add Part Requirement page, enter the applicable search criteria.
4. Click Search.
5. On the **Parts Found** tab, select the parts to add as part requirements.
6. For each part, select the applicable options:
   - **Qty**: Enter the quantity needed for the part.
   - **RM**: Select to indicate that a part like this one will be removed as part of the task.
   - **IN**: Select to indicate that the part is to be installed as part of the task.

- **Action**: Select whether CAMO should create a part request for the part requirement or not, whether the required part is included in a kit, or usually kept as bench stock.
- **Position**: If the required part is for a configuration slot with multiple position, select the correct position.
- Under **Alternate Part List**, if there are several alternate part numbers to choose from, you can select a specific part.

7. Click **Assign Selected Parts To Task Definition**.

Add measurements

About this task

Specify the measurements that the maintenance technician should record while executing the task. You can add measurements to job card definitions, or to executable requirement definitions.

Steps

1. On the **Task Definitions Details** page, click the **Execution** tab.
2. Click **Assign Measurements** ⊞.
3. On the **Measurements Search** page, enter the applicable search criteria.
4. Click **Search**.
5. Select **Applicable Measurements** from the search results, and click **Assign Measurement**.

Add tool requirements

About this task

List the tools required to complete the task. You can add tool requirements to job card definitions or to executable requirement definitions.

Steps

1. On the **Task Definition Details** page, click the **Execution** tab.
2. Click **Add Tool Requirement** ⊞.
3. On the **Add Tool Requirement** page, enter the applicable search criteria.
4. Click **Search**.
5. Select applicable tools from the search results, and enter how long each tool is needed in **Scheduled Hours**.
6. Click **Assign Selected Tools to Task Definition**.

Add task steps

You can add task steps required to complete tasks to job card definitions, and to executable requirement definitions. You can also change the order of the steps.

Steps

1. On the **Task Definition Details** page, click the **Execution** tab.
2. In the **Steps** area, click **Add Step**.
3. On the **Add Step** page, enter a brief description of the task step or use the list in the **Predefined Step Descriptions** area to add predefined quick text.

> **Tip** You can edit the predefined text (if required).

4. Click **OK**.

Select work condition settings

Work conditions are used to indicate the state an aircraft must be in before work can be performed. For example, an airplane must have its power turned off before work can be performed on its electrical systems.

About this task

List the aircraft technical conditions required to complete the job card.

Steps

1. On the **Job Card Details** page, click the **Execution** tab:
2. Click **Edit Conditions**.
3. On the **Edit Work Conditions** page, select the setting for each condition that applies to the task.
4. Click **OK**.

> **Note** In Production Planning and Control (PP&C) you can set filter criteria options to display tasks that can only be performed when an aircraft is in a specific work condition.

Activate job card definitions

You activate a job card definition when it is complete, associated with the correct requirement definition, and ready for use.

About this task

Use the following steps to activate one job card.

> **Note** To activate multiple job card definitions at the same time, do a Task Definition Search, select one or more definitions and click Activate Task Definition.

Steps

1. On the **Job Card Details** page of the appropriate job card definition, click **Activate Job Card**.
2. On the **Activate Job Card** page, provide the information requested, and click **OK.**
3. If prompted, enter your password and click **OK**.

Fleet Task Labor Summary tab

The Fleet Task Labor Summary tab enables you to search for tasks for which the time required to complete the work for a specific labor skill was outside a certain deviation percentage of the scheduled hours. The search results can help you adjust the scheduled hours for a certain skill in a task definition.

The Search Criteria group box on this page has the following fields:

- Assembly: The assembly for which the actual tasks are defined.
- Skill: The skill for which the task labor summary is requested (optional).
- Deviation %(+/-): The deviation beyond which tasks are returned in the search results. For example, if this value is 20, CAMO returns tasks that deviated 20% (+/-) outside the scheduled hours for the skill.

The table that displays the search results has the following columns:

- Task Definition: The task definition from which the actual tasks were initialized.
- Revision: The revision of the task definition.
- Assembly: The assembly for which the actual tasks are defined.
- Skill: The skill associated with this row of the task labor summary.
- Sched. Hours: The scheduled hours in the task definition for the labor row for this skill.
- AVG Hours (6 Months): The six-month running average of the actual hours that the actual tasks required for this skill.
- Difference: The difference between the average actual hours and the scheduled hours, as the percentage of the scheduled hours.

The following example shows how CAMO calculates the average hours and the difference between the actual hours and the scheduled hours.

Recurring requirement, R1, has one job card, JIC1. JIC1 has one labor skill, LS1. The scheduled hours for LS1 is two hours, and it requires two people. The actual data for two consecutive runs of R1 is as follows:

Run	Actual Hours for LS1	
	Person 1	Person 2
1	2:20 (2.33 decimal)	2:45 (2.75 decimal)
2	2:10 (2.17 decimal)	2:25 (2.42 decimal)

Average actual hours = ((2.33 + 2.75) / 2 + (2.17 + 2.42) / 2) / 2= 2.42 hours

Difference = ((2.42 - 2.00) / 2.00)*100) = 20.8335%

Requirement definitions

Requirements are the standard task definitions used to model maintenance activities. Requirements contain scheduling information, except for requirements created for replacement activities and troubleshooting, which do not require scheduling because they are used only when needed rather than at specific intervals.

You can put the execution steps, part, tool, and labor requirements into one or more job card definitions you associate with the requirement. Alternatively, you can create requirement definitions that include all necessary execution information and that do not have job cards; these are called *executable requirements*.

When you create a requirement, you select a class. In addition to the following, standard requirement definition classes provided in CAMO, your organization can create custom classes.

While a requirement is in build status, you can change its class if the requirement has the REQ class or a custom class. You can change the class to a custom class or to REQ class. This is useful if you are duplicating and revising definitions, or for correcting errors made during the build phase.

Requirement definition classes

Class	Description
Replacement (REPL)	Used for the removal of a component, and the installation of another component to replace it, for example, during an overhaul. Replacement tasks change the inventory condition of the removed part, and can change the aircraft configuration information.
Part Transformation (MOD)	A non-recurring requirement that involves the modification of a target part group. The part number changes as a result of the modification.
Overhaul (OVHL)	A complex series of maintenance tasks that are completed off wing. This is a routine and recurring requirement that resets the Time Since Overhaul (TSO) value of the component on completion.
Corrective Action (CORR)	Represents a troubleshooting task associated with a specific fault. The CORR requirement groups all the possible corrective actions to try when attempting to resolve the fault.
Discard (DISCARD)	A routine, non-recurring requirement that causes a certificate of destruction to be issued for the target component, which has become unserviceable because it has reached a certain age. CAMO sets the inventory condition to SCRAP, and does not allow any more work to be performed on the discarded inventory.
Repair reference (REPREF)	Represents a repair that can be done by a technician. Repair references are used to model one-time repairs such as EA (Engineering Authorizations) as well as re-usable repairs such as those found in the SRM (Structural Repair Manual) or re-usable EAs.
Follow-on (FOLLOW)	Describes work (such as an inspection) that must be performed after a fault is deferred or repaired. Added as Following Tasks on repair or deferral references and initialized when faults are deferred or repairs are completed.

Class	Description
Requirement (REQ)	Any type of maintenance requirement that does not fall into the other requirements classes—one that is not a replacement, part transformation, overhaul, corrective action, or discard. This class can be used to group routine and recurring tasks, or unplanned on-condition tasks, such as those required after a lightning strike.

Replacement requirements

You use replacement requirement definitions to model the replacement of a tracked component that is installed on an aircraft or another assembly.

Replacement requirements can be executable requirements, which contain all the instructions, and part requirements for the work, or they can contain job card definitions that contain the detailed instructions.

Regardless of the reason for the replacement—a component reaches its life limit and must be discarded, or is in need of an overhaul—the instructions and resources required to remove and install a component are the same each time it is replaced. The replacement requirement definition for a component can be re-used in any situation that requires the component to be removed. A single replacement requirement definition per component is more convenient than embedding the replacement instructions in every task definition that applies to the component.

When component tasks are initialized that require that the components be removed from an assembly, CAMO automatically creates the necessary replacement tasks, using the replacement requirement definitions. You can also create replacement tasks manually. Replacement requirements do not include scheduling information. The deadline of the component task, which drives the need for the replacement task, is copied to the replacement task, and you cannot change it.

You create a replacement requirement definition for the configuration slot of the component to be replaced. When a replacement task is initialized, CAMO associates the task with the parent configuration slot of the component, because that is where the replacement is done. Also, this allows the job card subtasks to remain on the parent component or assembly after the component is removed. This is important to ensure that if a component was removed, another component is installed in its place. The component task that drives the replacement, such as overhaul and discard tasks, are created on the component's configuration slot. Replacement requirement definitions are listed in the Config Slot Details page for both the configuration slot where the replacement work is required, and the configuration slot where the component is located.

In the event that an off-wing task for a component is canceled and that task has a link to the replacement task, then the replacement task is canceled, but only if work was not started on any

of the replacement task's job cards. If any job cards are in COMPLETE, IN WORK, or PAUSE status, the replacement task is not canceled. This ensures that you can't remove a component on a replacement task without installing another one in its place at some time.

The following diagram depicts that CAMO associates the replacement requirements and their job card subtasks to the parent configuration slot (21-22), and the component task definitions to tracked sub-configuration slots (BE580 and BE1578).

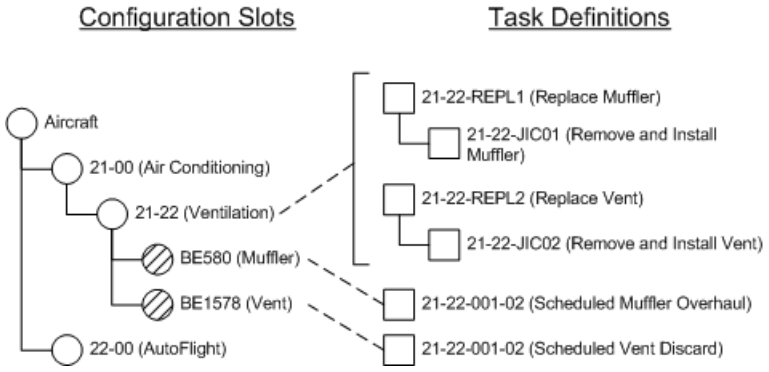

Replacement Tasks in the Configuration Hierarchy

Best practice is to create a replacement requirement definition for every tracked and sub-assembly configuration slot. However, if a task is initialized that requires the replacement of a component for which there is no replacement definition, CAMO creates an ad hoc replacement task that contains the component as a part requirement, but that is otherwise empty; it does not include labor requirements, tool requirements or instructions.

For configuration slots that have multiple positions, CAMO uses the single replacement requirement definition assigned to the configuration slot, but creates a replacement task for each position. The details shown for the replacement tasks, the job card subtasks, and the part requirements, display the configuration slot position, appended to the configuration slot name.

Job card definition subtasks

Using job card definitions to specify the instructions, parts, and labor resources that are needed to replace a component provides production planning personnel with improved visibility of the resources required. For replacements that are done only in line maintenance, and for which the removal and the installation are done within a short period of time, you can use a single job card. For the following however, consider splitting the removal and installation of a component into separate job card definitions:

- Complex replacement tasks such as the removal of an engine.
- Tasks in heavy maintenance visits for which the component removal occurs near the beginning of the visit, and the installation near the end.

With separate job cards, the resource needed for each task are more visible and can be managed more efficiently. When all the resources needed are specified on a single job card, knowing which resources are needed for the removal and which ones are needed for the installation is not as

obvious as with multiple job card definitions. You can use the job card classes RMVL and INST for the removal job card and the installation job card, respectively. If more job cards are needed in the replacement requirement definition—for example, for a functional check to do after the installation—use any other suitable job card class.

If the instructions for performing the replacement work are different between variants of the same aircraft or assembly, you create different job card definitions as subtasks of the same replacement requirement, and specify the applicability ranges or applicability rules in the job card definitions. When a replacement task is initialized, only the job cards that apply to the aircraft or assembly are created in the replacement task.

Related concepts

Component work packages and replacement tasks

Create replacement requirements

You can create replacement requirement definitions for tracked or sub-assembly components that need to be replaced several times during their lifetimes for overhaul or repair.

About this task

You can create replacement requirement only for tracked or sub-assembly configuration slots.

You can have only one active replacement requirement definition per configuration slot.

Steps

1. On your to-do list, click **Create Requirement**.
2. On the **Create Requirement** page, provide the required information. Note the following:
   - In the **Requirement Type** area, select **Config Slot**.
   - In the **Identification** area, select the assembly and the configuration slot.
3. In the **Classification** area, provide the required information. Note the following:
   - **Class**: Select REPL.
   - **Workscope**: Select *This requirement requires a job card for execution*.
4. Do not specify an applicability range or applicability rule in the Applicability area. Because you can only have one replacement requirement per configuration slot, the replacement requirement must apply to all parts for the configuration slot.

   Tip You can use applicability ranges and rules in job card definitions you include in the replacement requirement, for example, when the instructions for replacing the component vary from one part number to another within the part group.

5. In the **Planning Details** area, provide the required information. Note the following:

- **On Condition**: Select this option so that replacement tasks are created only when they are needed due to initialization task on the component. If you do not select On Condition, baseline synchronization creates replacement tasks unnecessarily, which display in the open tasks lists of your assets.
- **Review on Receipt**: Select this check box if this on-condition requirement should be reviewed to assess whether or not it should be executed when a new component or aircraft is inducted.
- **Enforce Workscope Order**: Select this check box if the job cards included in this requirement must be performed in the sequence in which they are listed in the requirement definition.

6. Provide the information requested in the remaining areas of the **Create Requirement** page, and click **OK**.

What's next

The requirement definition is in build status. To create tasks based on this requirement, you must activate the task definition and job card definitions it includes. However, if you need to add more information to the requirement by attaching documents, or by adding labor requirements and instructions to the job cards, do so before activating the requirements.

Add job card definitions to replacement requirements

About this task

You can add job card definitions in build or revision status to replacement requirement definitions. You cannot add not active job cards.

You must select job card definitions that are defined on the parent configuration slot of the component to replace.

Steps

1. On the **Requirement Details** page of the replacement requirement, click the **Job Cards** tab.
2. Click **Add Job Card to Requirement**.
3. On the **Add Job Card to Requirement** page, enter the complete job card definition code in the **Job Card** field, and click Select Job Card .
4. On the **Job Cards** tab, select the job card definition, and click **Add Job Card to Requirement**.

Part transformation requirements

A part transformation (MOD) requirement has the MOD task class. It is a type of nonrecurring requirement used to model the work required to modify a part. A new part number is created as a result of the modification.

When you create a modification requirement definition, you specify the original part number, and the new part number resulting from the transformation, in the Part Transformation group box of the requirement details.

If the new part number requires different task scheduling intervals than the original part number, you must update the task scheduling rules with the new intervals.

A modification requirement does not apply to any inventory that already has the target part number of the modification.

Create part transformation (MOD) requirement definitions

Part transformation (MOD) requirement definitions are non-routine, non-recurring requirement definition used to model the work required to modify a part.

Prerequisite

- The new part number that will be assigned to the part after the modification is complete must already exist in CAMO, and when applicable, it must be assigned to the same configuration slot as the modification requirement definition.

About this task

If the new part number requires different task scheduling intervals than the original part number, you must update the scheduling rules with the new intervals. A modification requirement does not apply to any inventory that already has the target part number of the modification.

Steps

1. On your to-do list, click **Create Requirement**.
2. On the **Create Requirement** page, provide the required information. Note the following:
   - In the **Requirement Type** area, select **Config Slot** if the part transformation applies to a specific configuration slot. Select **Part Number** if the part transformation applies to all inventory of a specific part number.
   - If you selected **Config Slot**, select the **Assembly** and click Select Config Slot to find the appropriate configuration slot.
   - If you selected **Part Number**, click Select Part to find the appropriate part number.
   - **Organization**: Select the organization whose users are allowed to modify the requirement.
3. In the **Classification** area, provide the required information. Note the following:
   - **Class**: Select MOD (Part Transformation).

- **Workscope**: If execution information will be provided in job cards, select *This requirement requires a job card for execution*. If you plan to include all execution information in the requirement, select *This requirement will contain execution information and will not have job cards*.

4. In the **Scheduling Details** area, provide the required information. Note the following:
   - **Recurring**: Leave this check box blank.
   - **Schedule From**: Select whether CAMO is to schedule the requirement starting from the manufactured date of the inventory, the received date of the inventory, or from an effective date. If you select effective date, specify the Effective From Date.
   - **Due Date**: If you selected an effective date for the requirement, you can optionally set a specific due date.
   - **Use Manufactured Date If Later**: This check box is visible only for task definitions that are scheduled from the effective date. Select it if you want CAMO to schedule the tasks based on the manufactured date for inventory that is manufactured after the specified effective date.
   - **Min Usage for Release**: For part number requirements and those based on a tracked configuration slot, type the percentage value that the usage must exceed before the inventory item, when loose, can be released from maintenance without seeing a warning.
   - **Schedule To Latest Deadline**: If the requirement has multiple deadlines, you can select this to have CAMO schedule the requirement at the latest of the deadlines.
   - **Min Forecast Range**: Type the number of days into the future CAMO should forecast tasks based on this requirement. CAMO initializes tasks that are due within their forecast range.
   - **Soft Deadline**: Select this if the deadline of the tasks based on this requirement can be exceeded without making the tasks overdue in CAMO.
   - **Create/Cancel on Install**: Specify whether CAMO should create a task based on this requirement, or cancel an existing task, when the applicable inventory is installed on an aircraft, or installed on a component other than an aircraft, for example, an engine.
   - **Must Be Removed**: This option is only visible for requirements defined on a tracked or sub-assembly configuration slot. You select whether the component must be removed for the part transformation work to be completed.
     - If the component does not need to be removed, select N/A.
     - If the component must be removed from its parent component, select Off-Parent.
     - If the component must be removed from its highest assembly, select Off-Wing.
   - **Next Shop Visit**: This option is visible only when you select both Soft Deadline and either Off Parent or Off Wing. Select Next Shop Visit if the task is one that should not prevent the component from going back into service if the task is not completed by its due date. CAMO does not automatically create component work packages or create replacement tasks for tasks that have this option selected.

- **Allow Manual Scheduling**: Select this check box to allow authorized users to edit the scheduling interval manually on tasks based on this requirement definition, therefore change the tasks due date.

5. In the **Applicability** area, provide the information requested if you want to restrict the inventory to which this requirement applies:
   - **Applicability Range**: Type the applicability range—the range or collection of applicability codes that, when assigned to inventory items of an inventory class of aircraft or assembly, make this requirement applicable to the inventory.
   - **Applicability Rule**: Type the applicability rule. The applicability rule is used for more complex filters.
6. In the **Planning Details** area, provide the required information. Note the following:
   - **On Condition**: Select this option if you do not want CAMO to create tasks based on this requirement, but want the tasks to be created by users only when they are needed.
   - **Review on Receipt**: This option is visible when you select On Condition. Select this check box if this on-condition requirement should reviewed—to assess whether it should be executed or not—when a new component or aircraft is inducted.
   - **Enforce Workscope Order**: Select this check box to specify that the job cards included in this requirement must be performed in the sequence in which they are listed in the requirement definition.
7. Provide the information requested in the remaining areas of the **Create Requirement** page, and click **OK**.

The requirement definition is in Build status. To create tasks based on this requirement, you must activate the task definition and job card definitions it includes. However, if you need to add more information to the requirement or to the job cards—labor requirements, instructions, part and tool requirements, and so on—do so before activating them.

What's next

The next step is to add part transformation information.

Add part transformation information

The part transformation information consists of the part number of the target inventory before the transformation work, and the new part number to assign to the inventory after the transformation work. Note that this is applicable to MOD requirement task definitions only.

Steps

1. On the **Requirement Details** page, click the **Details** tab.
2. Click Add Part Transformation .
3. On the **Add Part Transformation** page, provide the following information:

- **Transform From Old Part No**.: Select the part number of the inventory before the transformation work.
- **Transform Into New Part No**.: Select the part number to assign to the inventory after the transformation work.

4. Click **OK**.

What's next

Then you add a scheduling rule to a non-recurring requirement or block.

Add scheduling rules to modification requirements

You can add scheduling rules to a part transformation (MOD) requirement definition to establish how tasks are scheduled for maintenance activities.

Steps

1. On the details page for the requirement or block, click the **Scheduling** tab.
2. Click Add Scheduling Rule .
3. On the **Add Scheduling Rule** page, provide the following information:
   - **Usage Parm**: The calendar or usage parameter used to set the scheduling interval.
   - **Threshold**: The interval used to determine the task deadline, in units of the calendar or usage parameter.
   - **Notification**: The amount of usage or time ahead of the deadline when CAMO changes the task's schedule priority from LOW to HIGH.
   - **Deviation (Qty)**: The amount of usage or time by which the task can exceed its calculated deadline before becoming overdue (for most requirements, this is 0).
   - **Sched to Plan Low**: For long tasks, which planners might want to stagger to avoid exceeding the available capacity, type the amount of usage or time prior to the due date when it is acceptable to finish the task.
   - **Sched to Plan High**: For long tasks, which planners might want to stagger to avoid exceeding the available capacity, type the amount of usage or time after the due date when it is acceptable to finish the task.
4. Click **OK**.

What's next

Now you can associate job card definitions that are in Build or Revision status to the requirement definition.

Associate job card definitions to modification requirements

You must select job card definitions that are defined for the same configuration slot aircraft system or part number as the requirement.

Steps

1. On the **Requirement Details** page, click the **Job Cards** tab.
2. Click **Add Job Card to Requirement**.
3. On the **Add Job Card to Requirement** page, enter the complete job card definition code in the **Job Card** field, and click Select Job Card .
4. On the **Job Cards** tab, select the job card, and click **Add Job Card to Requirement**

Create troubleshooting requirement definitions

You create troubleshooting requirement definitions to associate them with fault definitions. You can provide corrective actions as instructions or attachments in the troubleshooting requirement itself, or create job card definitions for each corrective action, and assign the job cards to the troubleshooting requirement.

Prerequisite

- The troubleshooting requirement definition is defined on the same assembly and configuration slot as the fault definition with which it will be associated.

Steps

1. On your to-do list, click **Create Requirement**.
2. On the **Create Requirement** page, provide the required information. Note the following:
   - In the **Requirement Type** area, select **Config Slot**.
   - In the **Identification** area, select the assembly and configuration slot for which the troubleshooting task applies.
3. In the **Classification** area, provide the required information. Note the following:
   - **Class**: Select **CORR (Corrective Action)**.
4. If you want to restrict the inventory to which this requirement applies, provide the information requested in the **Applicability** area. For more help, note the following:
   - **Applicability Range**: Type the applicability range—the range or collection of applicability codes that, when assigned to inventory items of an inventory class of aircraft or assembly, make this requirement applicable to the inventory.
   - **Applicability Rule**: Type the applicability rule. The applicability rule is used for more complex filters.
5. In the **Planning Details** area, provide the required information. Note the following:

- **Review on Receipt**: Select this check box if this troubleshooting task should reviewed —to assess whether it should be executed or not—when a new component or aircraft is inducted.

6. In the **Instructions** area, type the troubleshooting instructions for technicians.

> **Tip** If you plan on assigning job card definitions to this troubleshooting requirement, to provide more detailed possible corrective actions, you might want to restrict the instructions here to a minimum.

7. Provide the information requested in the remaining areas of the **Create Requirement** page, and click **OK**.

What's next

You then need to activate this requirement.

Assign corrective actions to troubleshooting requirement definitions

The possible corrective actions are job card task definitions that have the status of Build or Revision, and that you assign to troubleshooting requirements.

Steps

1. On the **Requirement Details** page of the troubleshooting requirement, click the **Job Cards** tab.
2. Click **Add Job Card to Requirement**.
3. On the **Add Job Card to Requirement** page, enter the job card code in the **Job Card** field, and click Select Job Card .
4. On the **Job Cards** tab, select the check box next to the job card, and click **Add Job Card to Requirement**.
5. Repeat steps 2 to 4 as needed.

Activate requirement definitions

You activate a requirement definition when it is complete and ready for use.

About this task

Use the following steps to activate one requirement at a time.

> **Note** To activate multiple requirement definitions at the same time, do a Task Definition Search, select one or more definitions and click Activate Task Definition.

Steps

1. On the **Requirement Details** page, click **Activate Requirement**.
2. On the **Activate Requirement** page, provide the information requested, and click **OK**.
3. If prompted, enter your password, and click **OK**.

   You activate a job card definition when it is complete, associated with the requirement definition, and ready for use.
4. On the **Job Card Details** page of the required job card definition, click **Activate Job Card**.
5. On the **Activate Job Card** page, provide the information requested, and click **OK**.
6. If prompted, enter your password and click **OK**.

> **Note**
>
> If requirements include executable tasks, then after you activate requirement definitions, it can take up to an hour before actual tasks are created.

Create recurring requirements

About this task

You create a recurring requirement for maintenance work that must be repeated periodically, such as an inspection or an overhaul. CAMO uses its forecasting capabilities to estimate when subsequent occurrences of the requirement will be due for each applicable inventory item. When the active requirement task on an inventory is completed, CAMO makes a new active task for the same inventory, based on the recurring requirement task definition.

Steps

1. On your to-do list, click **Create Requirement**.
2. On the **Create Requirement** page, provide the required information. Note the following:
   - In the **Requirement Type** area, select **Config Slot** if the requirement applies to a specific configuration slot. Select **Part Number** if the requirement applies to all inventory of a specific part number.
   - If you selected **Config Slot**, select the **Assembly** and click Select Config Slot to find the appropriate configuration slot.
   - If you selected **Part Number**, click Select Part to find the appropriate part number.
   - **Organization**: Select the organization whose users are allowed to modify the requirement.
3. In the **Classification** area, provide the required information. Note the following:
   - **Class**: Select the applicable class from one of the following classes: **MOD (Part Transformation)**, **OVHL (Overhaul)**, or **REQ (Requirement)**.

- **Maintenance Program**: If you want to assign the requirement to an existing maintenance program for the assembly, select the maintenance program.
- **Workscope**: If execution information will be provided in job cards, select *This requirement requires a job card for execution*. If you will include all execution information in the requirement, select *This requirement will contain execution information and will not have job cards*.

4. In the **Scheduling Details** area, provide the following information:
   - **Recurring**: Select this option.
   - **Reschedule From**: Select date from which to schedule occurrences of tasks based on this requirement:
     - The date when the previous occurrence of the task is completed on the same inventory item (EXECUTE).
     - The start date of the work package in which the previous occurrence of the task is packaged (WPSTART).
     - The completion date of the work package in which the previous occurrence of the task is packaged (WPEND).
   - If you select effective date, specify the **Effective From Date**.
   - If you select effective date, and you want CAMO to schedule the tasks based on the manufactured date for inventory that is manufactured after the specified effective date, select **Use Manufactured Date If Later**.
   - If you assigned this requirement to an existing maintenance program, you can choose to schedule starting from the **Maintenance Program Activation Date**.
5. In the **Applicability** area, provide the information requested if you want to restrict the inventory to which this requirement applies. For more help, note the following:
   - **Applicability Range**: Enter the applicability range—the range or collection of applicability codes that, when assigned to inventory items of an inventory class of aircraft or assembly, make this requirement applicable to the inventory.
   - **Applicability Rule**: Enter the applicability rule. The applicability rule is used for more complex filters.
6. In the **Planning Details** area, provide the required information. Note the following:
   - **On Condition**: Select this option if you do not want CAMO to create tasks based on this requirement, but want the tasks to be created by users only when they are needed.
   - **Review on Receipt**: This option is visible when you select On Condition. Select this check box if this on-condition requirement should reviewed—to assess whether it should be executed or not—when a new component or aircraft is inducted.
   - **Enforce Workscope Order**: Select this check box to specify that the job cards included in this requirement must be performed in the sequence in which they are listed in the requirement definition.

7. Provide the information requested in the remaining areas of the **Create Requirement** page, and click **OK**.

   Now you need to add a scheduling rule to a recurring requirement or block. You can specify two different scheduling intervals for recurring requirements and blocks: one for the first occurrence of the task, and one for subsequent occurrences.
8. On the details page for the requirement or block page, click the **Scheduling** tab.
9. Click Add Scheduling Rule ⊞.
10. On the **Add Scheduling Rule** page, provide the following information:
    - **Usage Parm**: Select the calendar parameter to use to set the scheduling interval.
    - **Initial Interval**: The interval to use to determine the deadline of the first occurrence of the task, in units of the calendar parameter.
    - **Repeat Interval**: The interval to use to determine the deadline of the subsequent occurrences of the task, in units of the calendar parameter.
    - **Notification**: The amount of time ahead of the deadline when CAMO changes the task's schedule priority from LOW to HIGH.
    - **Deviation (Qty)**: The amount of time by which the task can exceed its calculated deadline before becoming overdue (for most requirements, this is 0).
    - **Sched to Plan Low**: For long tasks, which planners might want to stagger to avoid exceeding the available capacity, type the amount of time prior the due date when it is acceptable to finish the task.
    - **Sched to Plan High**: For long tasks, which planners might want to stagger to avoid exceeding the available capacity, type the amount of time after the due date when it is acceptable to finish the task.
11. Click **OK**.

    You activate a requirement definition when it is complete and ready for use.
12. On the **Requirement Details** page, click **Activate Requirement**.
13. On the **Activate Requirement** page, provide the information requested, and click **OK**.
14. If prompted, enter your password, and click **OK**.

Add aircraft weight and balance impact to requirements

Prerequisite

- The requirement definition is in the Build or Revision status. You cannot specify weight and balance impact on active requirement definitions.
- The requirement definition is not locked.

About this task

In a requirement definition, you can specify the impact that the work has on the weight and balance of the aircraft. When a requirement definition applies to several models of an aircraft assembly, you can specify a different weight and balance impact for each model, if required. This information helps your organization keep track of the total weight and center of gravity of each aircraft on which the requirement is performed.

CAMO provides the report called the Weight and Balance Impact report that lists all the requirements completed on a given day that have an impact on the aircraft weight and balance, and that shows the value of these impacts. The report can be sent by email automatically to a controller who communicates this information to the flight crew. Information on how to configure the report server to send the report by email is provided in the *CAMO Administration Guide*. You can also generate the report manually at any time.

Steps

1. On the details page of the requirement definition, click the **Details** tab.
2. In the **Weight and Balance** area, click ⊞.
3. On the **Add Weight and Balance** page, provide the following information and click **OK**:
   - **Minor Model**: Select the model of the assembly to which the impact you are defining applies.

     When adding weight and balance impact for the first time on the requirement definition, you must add one to the Default model of the assembly to which the definition relates. If you have already defined the Default weight and balance impact, you can select another model of the assembly from the list.

     The list only displays the models that relate to the assembly and that do not have a weight and balance impact already defined in the requirement definition.
   - **Weight**: Enter the impact of the requirement on the weight of the aircraft. The default unit is pounds; your CAMO administrator can change this unit if needed.
   - **Moment**: Enter the impact of the requirement on the balance (in moment) of the aircraft. The default unit used for moment is inch-pounds; your CAMO administrator can change this unit if needed.

     Tip You can edit the values assigned to a weight and balance impact by selecting the impact and clicking ↗. To delete a weight and balance impact, select it and click ⊟. You cannot delete the Default weight and balance impact, but you can edit its values.

Generate the Weight & Balance Impact report manually

You can generate the Weight & Balance Impact report whenever you need to. When you do, you select a single day for which you want to see all requirement tasks that were completed that have an impact on the aircraft's weight and balance.

Prerequisite

- You have the URL required to access JasperReports server.

Steps

1. In a browser window, go to the URL of the JasperReports server, and enter your user name and password.
   The JasperReports server's main page opens.
2. Find the Weight & Balance Report by doing one of the following:
   - In the search box in the top right section of the page, type the following and press Enter:

     `WeightBalanceImpact`
   - Click **View > Repository** then, in the **Folders** pane on the left, go to the following:

     root > Organizations > Maintenix > Reports > Core > taskdefinition > WeightBalanceImpact
3. In the **Repository** pane, click the name **WeightBalanceImpact**.
4. In the **Input Controls** dialog box, enter a **Report Date** and click **OK**. By default, yesterday's date is already selected.

   Note When generated, the report lists all requirement tasks that were completed on the selected date, from 00:00:00 hrs to 23:59:59 hrs.

   The **Weight & Balance Impact** report opens on the page.
5. Optionally, you can export the report in a variety of formats, including Excel. To do so, click the **Export** button on the toolbar and select the format.

Reference document definitions

Reference document definitions are used to track compliance to airworthiness directives (AD), service bulletins (SB), maintenance planning documents (MPD) from the manufacturer, and more.

Reference document definitions cannot be initialized as active tasks. You cannot assign reference documents to blocks, and you cannot assign job cards to reference documents. However, you can link reference documents to requirements.

You can also use reference document definitions to represent administrative documents you receive, and for which no maintenance work is needed. In this case, you do not link the reference document to any requirement.

A new reference document has the Build status until you disposition it. While the status remains Build, you can continue to modify the reference document as needed, including changing the class. You can lock reference documents to prevent any modifications while the reference document is in Build or Revision status. If you duplicate a reference document definition, you can change the class on the new definition.

Reference documents can be associated with specific warranty contracts.

Reference Documents Disposition

You disposition a reference document to specify how you handled the information or instruction included in the document. Dispositioning of a reference document changes its status to Active. Your organization configures the types of dispositions that you can select; for example, Not Applicable To Fleet, Maintenance Required, and Rejected.

If a reference document describes work that must be performed, and the work is completed on applicable inventory as part of a requirement, you can also initialize the reference document as historical for the inventory items on which the work was completed, and as non-applicable for inventory for which the maintenance work was not required. Note that initializing reference document is not required for modeling ADs, SBs and other types of directives. You can simply disposition the reference document; the links to completed requirements provide the necessary traceability.

Create aircraft maintenance program reference documents

Steps

1. On your to-do list, click **Create Reference Document**.
2. On the **Create Reference Document** page, enter the following information:
   - **Reference Document Type**: Select Config Slot.
   - **Code**: Type the AMP item number.
   - **Name**: Type the AMP item title.
   - **Assembly**: Select the aircraft assembly.
   - **Config Slot**: Select the appropriate ATA system.
   - **Class**: Select AMP.
   - **Subclass**: Select the appropriate subclass.
   - **Received By**: The default is your user name. If the AMP item was received by someone else, type their user name.
   - **Received Date**: Type the date the you received the AMP item.
   - **Issued By**: If the AMP item is issued by an OEM, select MANUFACT. If the AMP item is issued by the operator, select OPER.
     - **Manufacturer**: Type the manufacturer.

- **Operator**: Select the operator.

3. Click **OK**.

If the AMP reference document is applicable to the fleet, then requirements must be created to comply with the reference document.

What's next

See *Disposition a reference document*

Disposition a reference document

About this task

You disposition a reference document to specify how you handled the information or instruction included in the document. Dispositioning a reference document changes its status to ACTIVE. Once active, the document cannot be edited.

Steps

1. On the **Reference Document Details** page, click **Disposition Reference Document**.
2. On the **Disposition Reference Document** page, provide the requested information and click **OK**.
3. Click **OK**.
4. If prompted, enter your password and click **OK**.

If work needs to be done on the assembly to comply with the SB, create engineering order (EO) requirement definitions and link them to the compliance reference document.

Block definitions

Requirement definitions that should be completed together can be grouped in block definitions. Using blocks facilitates the scheduling of the large number of maintenance requirements that aircraft and other assemblies often have.

You can create blocks for daily requirements such as overnight checks, or for heavy maintenance visits that can have hundreds of requirements. Block definitions are always associated with a configuration slot, not a part number. Blocks are generally created the root level of the assembly.

You can group requirements in a single block or group and sequence them in a block chain. Single blocks are called one-time blocks because all the requirements are to be completed at the same time. Both one-time blocks and block chains can be set to recur or to occur once.

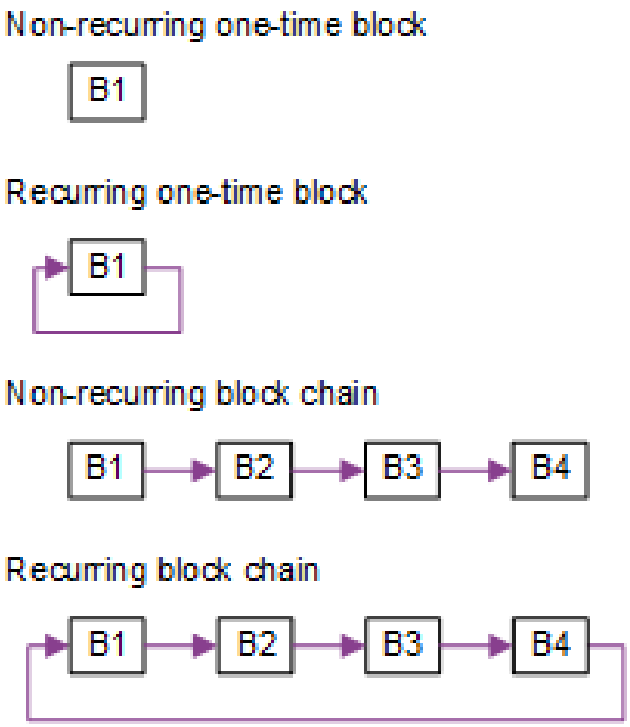

Recurring and non-recurring block and block chain definitions

In a block chain, the same requirement can be added to multiple blocks. You can use block chains to divide maintenance visits into phases, or to equalize the workload by spreading requirements that have varying intervals across the blocks in a chain.

The workflow for creating blocks is as follows:

1. Create the block definition. Optionally add technical references, attachments, and (complies, opportunistic, replaces, or supersedes) links to task definitions.
2. Add scheduling rules and applicability to the block definition as you do for other task definitions.
3. Assign requirements to the block or blocks.
4. Approve, activate, initialize the definition as you do for other definitions.

Blocks can be modified, and locked to prevent modification.

If you move one block that is part of a block chain to a different configuration slot, delete the block, or make it obsolete, all the other blocks in the chain are also moved, deleted or made obsolete. Also, when you active a block chain you activate all blocks that are included in the chain.

Related concepts

Driving tasks and driving deadlines

Updating the mapping between blocks and requirements

Assigning requirements to block definitions

After you create a block definition, you assign requirement definitions to the block. The block definition must have the Build or Revision status for you to add requirements to it.

The same requirement can be assigned to multiple blocks. This is recommended only when the blocks are not applicable to the same aircraft. CAMO ensures that only one active instance of requirement can exist against an inventory record. If you assign the requirement to more than one block that is applicable to the same aircraft, CAMO assigns the initialized requirement to only one of the blocks.

The requirement definitions you can assign to block definitions must meet the following criteria:

- Be based on configuration slots, not part numbers.
- Have one of the following status values: Build, Revision or Active.
- Have the same On-Condition setting as the block definition to which you are trying to assign them.
- For recurring block chains and recurring one-time blocks, the requirements are recurring.
- For non-recurring one-time blocks, the requirements are non-recurring.
- For non-recurring block chains, the requirements can be recurring or non-recurring.

The way to set up blocks is recommended by the manufacturer. However, airlines may adjust the groupings.

In one-time blocks, both recurring and non-recurring, you usually assign requirements that are completed at the same time; for example, the requirements that define all the tasks required for a specific type of check. In recurring one-time blocks, the requirements that you assign also have the same repeat interval.

Grouping requirements in a block chain

In block chains, you can assign requirements to specific blocks within the chain, and you can make them recurring by repeating them at an interval of blocks within the chain.

For example, in a chain containing 10 blocks, you can set that a requirement should be repeated at intervals of two blocks, starting from the first block in the chain; CAMO automatically adds the requirement to blocks 1, 3, 5, 7, and 9 in the chain.

Block chains are recurring or non-recurring. When you add a requirement to a recurring block chain, you must choose the first block in the chain for the first instance of the requirement, and you can only select intervals that correspond to a number by which you can divide the total number of blocks in the chain. For example, for a chain of 10 blocks, you can only select the interval from the following values: 1, 2, 5, and 10.

When you add a requirement to a non-recurring chain, you can place the first instance of the requirement in any block in the chain, and select any interval—the largest being the total number of blocks in the chain.

Grouping requirements that share a deadline

Both blocks and requirements have deadlines. A block is often constructed based on a deadline that is common to several requirements. For example, consider that multiple recurring requirements all have a deadline of 500 flying hours, as R1 and R2 in the following illustration. You can create a block chain, in which each block contains the tasks with a deadline of 500 flying hours.

If there are two more requirements, with deadlines of 1500 flying hours (R3) and 1000 flying hours (R4) respectively, these requirements fit into to this block segmentation as well.

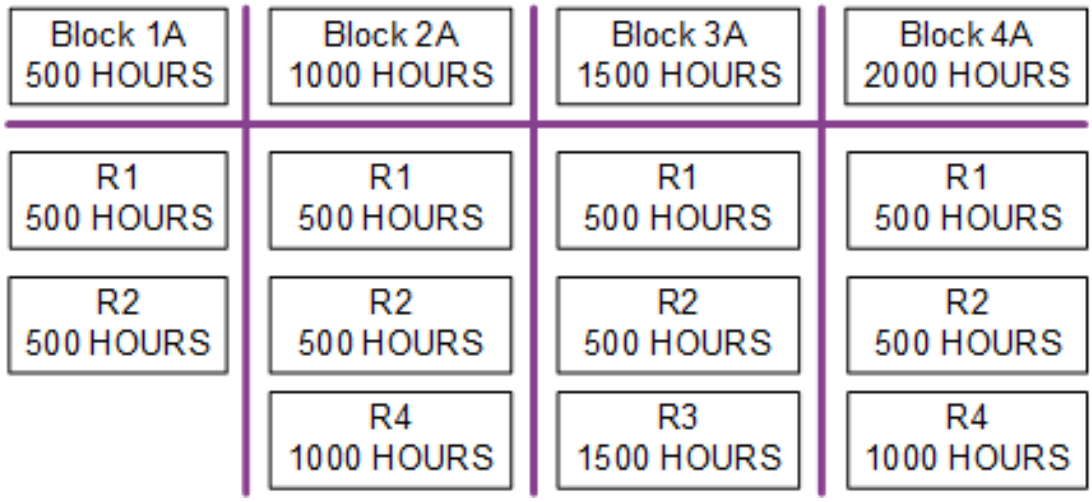

Packaging requirements into blocks in a block chain definition

Equalized packaging

Scheduling work packages of similar size is a common practice. For example, rather than scheduling all requirements with a deadline of 1000 flying hours into the 1000 flying hours and 2000 flying hours blocks, it makes sense to take the 1000 flying hours deadline requirements (R4 and R5) and spread them between the blocks. They still have 1000 flying hours between each task, but are staggered between the work packages.

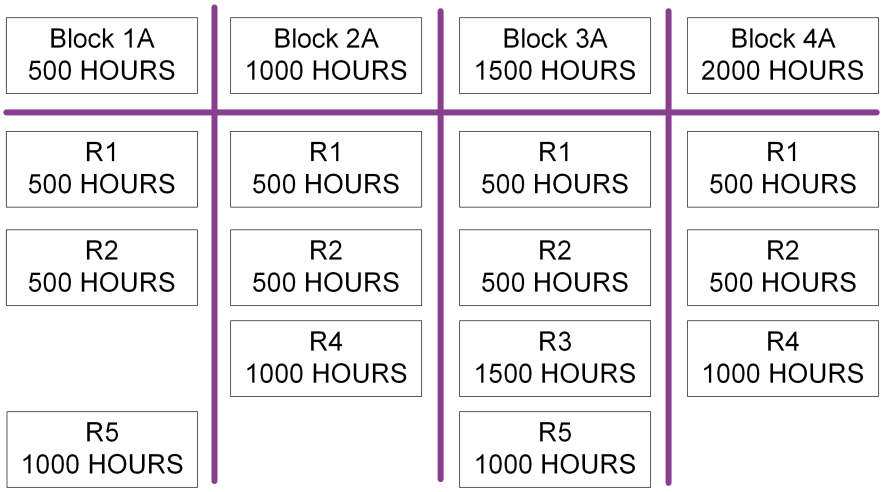

Equalize packaging between blocks

Packaging slightly out-of-phase requirements into block definitions

Sometimes an organization wants to compromise a higher yield for convenient packaging of tasks. For example, organizations can include out-of-phase task definitions in a block, even though they do not match the schedule of the block, as shown in

If the out-of-phase task has a larger deadline interval, you sacrifice the yield on that task; however, if you choose to package a requirement that has a smaller deadline interval than the block into which you are putting the requirement, then you sacrifice the yield on every task in that block. The deadline for a block is determined by the smallest deadline interval in the block—called the driving task. You can also leave outof- phase requirements out of a block if their deadline is not close enough to the block deadlines. These requirements are packaged into a work package at the time they are due.

The baseline synchronization process in CAMO updates the mapping of requirements to blocks. There is a configuration parameter in CAMO that determines whether baseline synchronization removes constituent requirements that are due before the block—making them loose requirements—or leave such requirements in the block thus moving the entire block to an earlier time to match the driving deadline.

A planner can also resolve this for a single requirement by clicking **Unzip Requirement**. Clicking **Unzip Requirement** on a requirement excludes it from the zip job and unassigns it from the block, preventing baseline synchronization from re-zipping it. Clicking **Zip Requirement** clears the exclusion and queues the requirement to be zipped back into the eligible block. For more information, see *Unzip a Requirement from a Block* and *Zip a Requirement into a Block*.

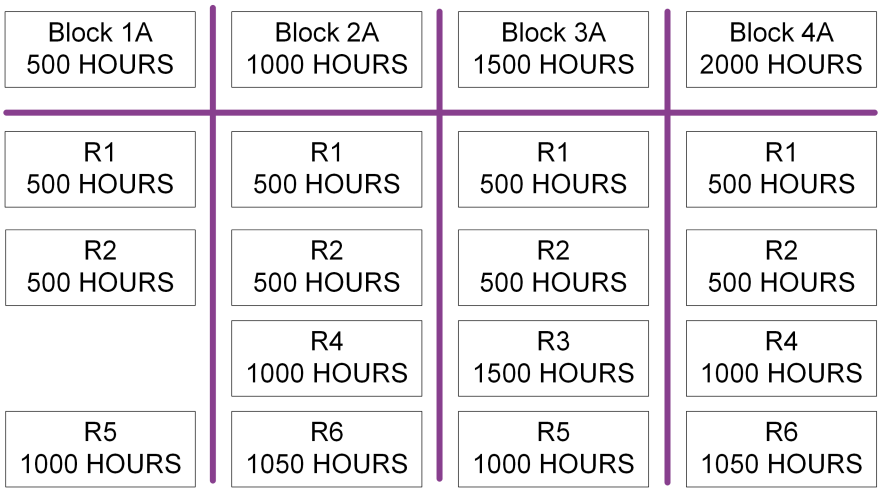

Packaging slightly out-of-phase requirements into block definitions

Recurring requirements in block chains

When a block contains a requirement with a task dependency—such as a recurring requirement—and the block itself has a dependency, CAMO applies logic to prevent duplicate requirements from being created for the next instance of that task.

For example:

- CAMO does not trigger any dependency logic when a requirement—normally part of a block — is completed, even if that requirement was unassigned from the block and executed in a different work package. Therefore, if this is a recurring requirement, CAMO does not create the next instance of the task.
- When a block is completed and the next block is created, all subtasks (requirements) are created as usual. All requirements that contain a task dependency cause CAMO to find the previous instance of the originating requirement, and create the usual link between them. Requirements that are not part of a block see their task dependency logic run at the time of completion.

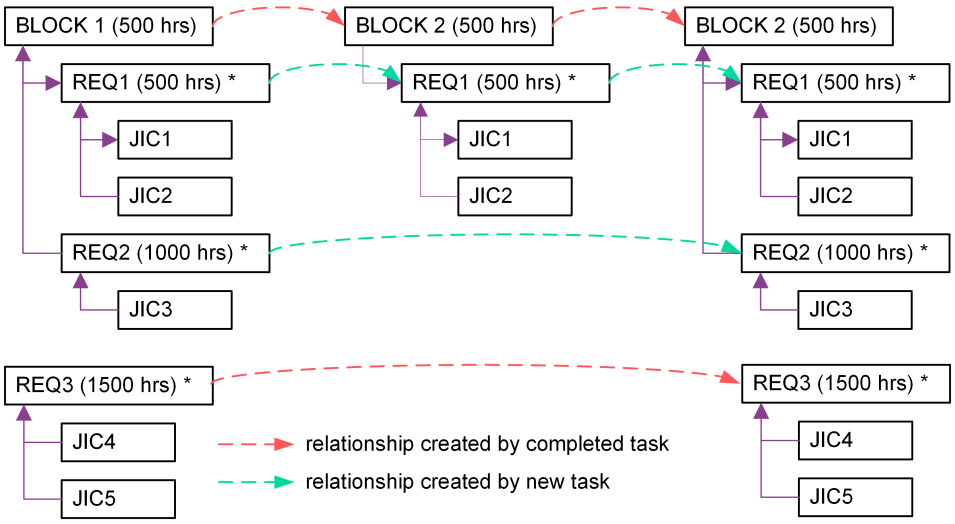

Recurring blockchain definition sub-task logic

Create and edit blocks

To group requirements that must be completed in the same maintenance visit, you can create a one-time block definition and assign all the requirement definitions for that visit to the block.

About this task

The following procedure is for creating a one-time, non-recurring block.

Steps

1. Select the **Task Definition Search** menu item.
2. On the **Task Definition Search** page, click **Create Block**.
3. On the **Create Block** page, in the **Details** area, select **One-Time Block, Not Recurring**.
4. In the **Identification** area, provide the required information. Note the following:
   - **Code**: Enter a unique code for the requirement.
   - **Assembly**: Select the type of aircraft to which the block definition applies.
   - **Name**: Enter a name for the requirement.
   - **Config Slot**: Click and select the aircraft system associated with the work the block definition covers. When creating blocks for maintenance work on many systems, select the aircraft itself.
5. In the **Scheduling Details** area, provide the required information. Note the following:
   - **Scheduled From**: Select a scheduling start value to calculate the task deadline.
   - **Schedule to Latest Deadline**: Select this check box if a task has multiple deadlines, and the requirement is due after the second deadline comes due.
   - **Soft Deadline**: Select this check box if the deadlines for the requirement are considered soft.

- **Allow Manual Scheduling**: Select this check box if you want to allow authorized users to edit the scheduling interval manually on tasks that are initialized from this task definition.
- **Min Forecast Range**: Enter the minimum number of days for which you want CAMO to create forecasted tasks.

6. In the **Planning Details** area, you can do the following:
   - Select one or more work types that apply to the block. Hold the CTRL key as you click to select multiple work types.
   - Enter the estimated number of hours required to complete the work.
7. Provide any of the other information requested, as needed, and click **OK**.
8. On the **Block Details** page, click the **Requirements** tab.
9. Click **Add Requirement to Block**.
10. On the **Add Requirement to Block** page, enter the requirement definition code and click to add the requirement definition to the Requirements tab. Repeat to add another requirement to the tab.

> **Note** FOLLOW class requirement definitions cannot be assigned to blocks.

11. To assign requirement definitions to the block, select each requirement definition, and click **Add Requirement to Block**.
12. On the **Block Details** page, click **Activate Block**.
13. On the **Activate Block** page, enter **Description** and **Notes** if needed
14. Click **OK**.
15. If prompted, enter your password, and click **OK**.

Master panel card definitions

A master panel card (MPC) is a task definition that lists the possible aircraft panels that can be opened and closed during a maintenance event. Using MPCs enables you to accurately plan the maintenance visit by taking into consideration the time and resources required to open and close the panels required to complete the maintenance work, and it helps personnel to ensure that all affected panels are closed before the aircraft is released.

An MPC task definition lists several aircraft panels; to facilitate planning, it is advisable to create one MPC task definition for each zone, or sub-zone, of the aircraft, and include all panels in the zone, or sub-zone, in it. When a work package is committed, or when the workscope is generated, CAMO scans each task in the work package and builds a list of all panels that must be opened and closed for that work package. CAMO then looks up the MPC task definition(s) that apply to the aircraft of work package; for each applicable MPC task definition found, CAMO creates one task for opening the affected panels and one task for closing the affected panels. While an MPC task

definition lists all possible panels in a zone or sub-zone, only the actual panels that are affected by the other tasks in the work package are included in the open panel and close panel tasks CAMO creates for that MPC.

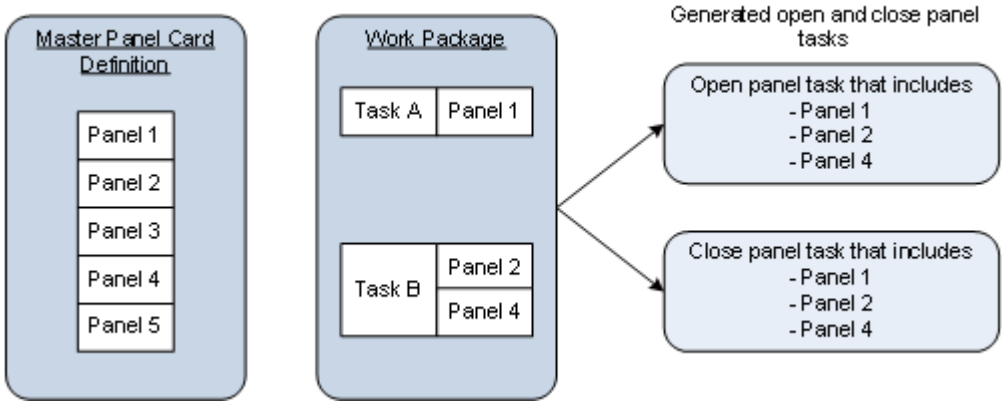

Master panel card definitions

Like other task definitions, you must activate MPC task definitions before they can generate open panel and close panel tasks in your work packages, but MPC task definitions and open/close panel tasks differ from other CAMO tasks in that they:

- Do not have sub-tasks.
- Do not have dependencies.
- Do not have any scheduling rules.
- Cannot be assigned to block or requirement task definitions.
- Are never initialized manually. CAMO automatically creates the necessary open panel and close panel tasks when a work package is committed, or when the workscope is generated, as long as the panels that must be accessed during the execution of the work package are assigned to an active master panel card definition.
- Can be revised, but no baseline synchronization occurs for them upon activation of a revision.
- Are created for assemblies, but not for part numbers.

Each MPC task definition is defined against an assembly. You can also assign a work type to a master panel card definition. CAMO initializes open and close panel tasks for work packages with a matching assembly and work type. The work types in the MPC task definitions must have exactly the same work type(s) as the work package. When no work type is specified in the MPC task definition, the definition applies to all work packages on the selected assembly.

Note

If you work with Production Planning & Control (PP&C) to create and manage production plans, the open and close panel tasks will be added to the phases that have their task class (MPCOPEN and MPCCLOSE), and to work areas that have the aircraft zone to which the panels belong. In production templates, you can configure the phases and work areas that will hold the open and close panel tasks when they are generated as part of a work package, but you do not load their task definitions into the template.

To ensure that the automatic assignment feature of PP&C can put the open and close panel tasks in the correct work areas, each MPC task definition should correspond to only one work area in PP&C; if an MPC task definition covers panels in that are in two different work areas in PP&C, auto-assignment won't be able to assign the associated open and close panel tasks correctly. For satisfactory results, if you put all panels of an aircraft zone into an MPC task definition, create a work area for that entire zone in your production plan; if you set up an MPC to cover the panels in a sub-zone, you can create a work area for the entire zone, or create work areas for each sub-zone.

Open/Close panel job card definitions

After you have created your master panel card task definition, you create open job card definitions and close job card definitions for all aircraft panels. In the open panel or close panel job cards, you can assign specific instructions, part requirements, labor requirements, tool requirements, and measurements that will be included in the initialized open and close panel tasks. When CAMO creates the open panel and close panel tasks in the workscope, it includes the information from the open and close job card definitions to the tasks.

You can create individual open and close job card definitions for each panel, or use the same job card definition for several panels. The open and close job card definitions are not linked directly to the MPC task definition, the association between MPC task definition and job card definitions is derived from the fact that they are all assigned to the same panel on the same aircraft.

When CAMO instantiates the open and close panel tasks in the workscope, the following information from the open and close job card definitions is added to the tasks:

- Task description.
- Task instructions.
- Technical references.
- Attachments.
- Labor requirements.
- Part requirements.
- Tool requirements.

- Measurements.
- List of zones and panels.

When there are multiple open or close panel job card definitions associated with the MPC task, duplicate entries are removed. For example, if your open panel task is linked to two open job card definitions, each with the same part request, the task contains a single request for the part, and not a request for two identical parts.

Note In a zone with multiple panels, you can close a panel that does not have active job card tasks in the same work package, even if other panels have active tasks. However, you cannot close a panel that has active job card tasks in the same work package.

Master panel card examples

The following diagram displays a sample baseline set up for master panel cards.

- Two master panel card definitions are created: MPC Definition 1 and MPC Definition 2.
- Panel 1 and Panel 2 are assigned to MPC Definition 1.
- Panel 3 and Panel 4 are assigned to MPC Definition 2.
- Open and close job card definitions are then created and assigned to each of the four panels; some panels share the same open or close job card definitions, while other panels have their own job card.

The following diagram assumes that all master panel card definitions and job card definitions are against the same assembly, with the same work type.

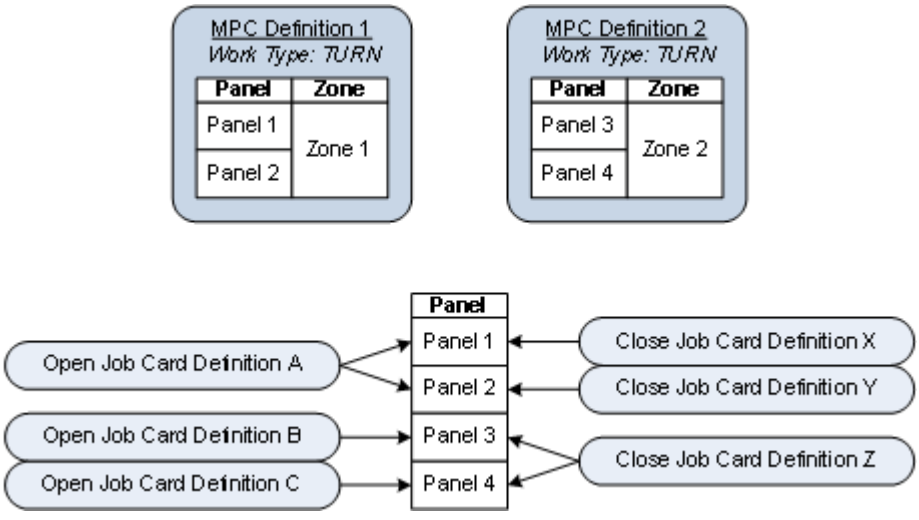

Sample baseline set up for Master Panel Cards

The following examples use the sample baseline set up information from the previous diagram to demonstrate how CAMO instantiates actual MPC tasks within a work package workscope.

Example One:

This example demonstrates a simple case where one panel is involved in a work package.

If you have a task in a work package that involves access to Panel 1, generating the workscope of that work package automatically creates two new tasks from the MPC Definition 1:

1. An open panel task that contains the information from Open Job Card Definition A.
2. A close panel task that contains the information from Close Job Card Definition X.

Example Two:

This example demonstrates how CAMO combines the information from multiple job card definitions into a single instantiated MPC task.

If you have tasks in a work package that involve access to Panel 1 and Panel 2, generating the workscope of that work package automatically creates two new tasks from the MPC Definition 1:

1. An open panel task that contains the information from Open Job Card Definition A.
2. A close panel task that contains the information from both Close Job Card Definition X and Close Job Card Definition Y.

Because Panel 1 and Panel 2 share the same open job card definition, the open panel task contains only the information from Open Job Card Definition A . Because both Panel 1 and Panel 2 have separate close job card definitions, the close panel task contains the information from both Close Job Card Definition X, and Close Job Card Definition Y.

Example Three:

This example demonstrates how CAMO creates separate open and close panel tasks for each MPC task definition whose panels are involved in a work package. Information from multiple job card definitions is still combined within an open or close task when the associated panels use separate open or close job card definitions.

If you have tasks in a work package that involve access to Panel 2, Panel 3 and Panel 4, generating the workscope on that work package automatically creates four new MPC tasks. Because Panel 2 is assigned to MPC Definition 1, the following tasks are created from MPC Definition 1:

1. An open panel task that contains the information from Open Job Card Definition A.
2. A close panel task that contains the information from Close Job Card Definition Y.

Because Panel 3 and Panel 4 are assigned to MPC Definition 2, the following tasks are created from MPC Definition 2:

1. An open panel task that contains the information from both Open Job Card Definition B and Open Job Card Definition C.
2. A close panel task that contains the information from Close Job Card Definition Z.

Create master panel card definitions

Steps

1. On your to-do list, click **Create Master Panel Card**.
2. On the **Create Master Panel Card** page, provide the required information. Note the following:
   - **Assembly**: Select the aircraft type.
   - **Organization**: Select the organization whose users are allowed to modify the master panel card.
   - **Class**: Select **MPC** (Master Panel Card).
   - **Work Types**: To use the MPC definition for all work packages created for the type of aircraft selected, do not select a work type. To use this MPC definition only for specific types of work packages, select the work type that will be assigned to the work packages from the list.
3. Click **OK**.

Revise master panel cards

About this task

If the master panel card definition already exists, these steps are executed to put it into a revision (editable) status. You can then perform any of the instructions provided below; they apply to both creating a new master panel card, and revising an existing one.

Steps

1. On your to-do list, click **MPC Search**.
2. On the **MPC Search** page, provide the following information:
   - Select **Search By Assembly**.
   - **Assembly**: Enter the assembly of the master panel card to be revised.
3. Click **Search**.
4. In the search results list, click the master panel card link.
5. On the **Master Panel Details** page, click **Create Revision**.
6. On the **Create Revision** page, type the name of the contact person for the revision, the reason for the revision, and any note you see fit.
7. Click **OK**.

Add zones to master panel card definitions

About this task

There are three procedures for adding/removing zones and panels from MPCs (this one and the next two) and there is a fourth in the "Common Task Definition Procedures" section of this file; the ones here are for MPCs only; the software behaves a bit differently when adding zones to MPCs than when adding them to other types of task definitions; when you add a zone to an MPC, CAMO automatically adds all panels defined in that zone to the MPC, it does not do that for other types of task definitions.

Steps

1. On the **Master Panel Card Details** page, click the **Zones/Panels** tab.
2. Click **Add Zone** ⊞.
3. On the **Add Zone** page, select the applicable zone(s) and click **OK**. Any panel that belongs to one of the zone(s) you added appears under **Panels**. You can add more panels if you want, or remove individual panels from the MPC definition.

Add panels to master panel card definitions

Steps

1. On the **Master Panel Card Details** page, click the **Zones/Panels** tab.
2. Click Add Panel ⊞.
3. On the **Select Panel** page, enter the applicable search criteria and click **Search**.
4. In the search results list, select the applicable panels.
5. Click **OK**.

Add technical references to master panel card definitions

About this task

You can add one or more technical references to link the master panel card to information that resides in an external document management system. When you have several technical references, you can change their order on the master panel card.

Steps

1. On the **Master Panel Card Details** page, **Details** tab, click **Add Technical Reference** ⊞. The IETM Search page opens with the buttons related to Technical References.
2. On the **IETM Search** page, enter your search criteria and click **Search**.
3. On the **Search Results** tab, select the required references.
4. Click **Assign Technical Reference**.

Add an attachment to a master panel card definition

About this task

Context for the current task

Steps

1. On the **Master Panel Card Details** page, **Details** tab, click **Add Attachment** ⊞. The IETM Search page opens with the buttons related to Attachments.

   Note The size of the attachment must be smaller than the configured file size. The default size of the file that can be attached is 10MB. Contact your administrator if you do not know what your configured file size is.

2. On the **IETM Search** page, enter your search criteria and click **Search**.
3. On the **Search Results** tab, select the required attachments.
4. Click **Assign Attachment**.

Activate master panel card definitions

You must activate master panel card task definitions before they can be used to generate open and close panel tasks in work packages.

About this task

Use the following steps to activate one requirement at a time.

Note To activate multiple requirement definitions at the same time, do a Task Definition Search, select one or more definitions and click Activate Task Definition.

Steps

1. On the **Master Panel Card Details** page, click **Activate Master Panel Card**.
2. On the **Activate Task Definition** page, provide the information requested, and click **OK**.
3. Click the down arrow next to the CAMO logo, and then click **Administrator Search** > **Part Group Search**.

Note

After you activate master panel card definitions, it can take up to an hour before actual tasks are created.

View differences between master panel card revisions

About this task

All differences between the two revisions are highlighted in yellow. Hover over the highlighted sections to reveal more details about the change. To turn the show differences feature off, click Hide Differences.

Steps

1. On the **Master Panel Card Details** page, click **Show Differences**.
2. On the **Show Differences** page, from the **Compare To Revision** drop-down list, select the revision that you want to compare to the current revision.
3. Click **OK**.

Task definition revisions

When changes are required on requirement, job card, block, or master panel card task definitions that are in use to create actual tasks for aircraft undergoing maintenance, you create a revision of the affected task definitions. When you create a revision of a task definition, its status changes to Revision. Any actual tasks created are based on the active revision of the task definition, not on the one that is in revision. When you revise a task definition, you can change a lot of information, such as part requirements, labor requirements, task applicability, scheduling information, work type, instructions, and more. However, you cannot the change the following information:

- The assembly, configuration slot and, when applicable, the Replace configuration slot.
- The task class assigned to the definition.
- Previous task links: To change this, you must revise the definition of the previous task.
- Linked from tasks: To change this, you must revise the definition of the linked task.
- The warranty summary: This is associated with the warranty contract, and cannot be changed in a task definition.
- Whether a requirement definition is an executable requirement or not.
- The blocks to which requirement definitions are assigned.

When revising non-executable requirement definitions, the following restrictions apply:

- You cannot remove the associated job card definitions while these job card definitions are active (they must also be in revision).
- The information shown on the Execution tab is for reference and information purposes only, and it is not included in actual tasks created from the requirement definition; you must revise the job card definitions to change the execution information.

Revise and activate task definitions

About this task

Follow these steps to change an existing task definition that is in use.

Steps

1. Select the menu item to search for the task definition. Depending on your role, you might have one or more of the following menu items: **Task Definition Search**, **Requirement Search**, or **Job Card Search**.
2. On the **Search** page, select the search criteria, and click **Search**.
3. Click the task definition you want to revise.
4. On the details page of the task definition, click **Create Revision**.
5. On the **Create Revision** page, provide the **Revision Contact**, **Revision Reason** and **Revision Notes**, and click **OK**.

   Entering a revision reason and note may be optional at your organization. When you create or activate job card revisions, the revision reason and notes that you enter appear on the **Job Card Details** page > **Revision** tab, and on the **Work Package Details** > **Job Cards with Newer Revision** page. This information can help users review the revision history and make decisions about updating job cards to the latest revision.
6. Make the necessary changes to the task definition.
7. On the details page of the task definition, click the button called **Activate <task definition type>**, where <task definition type> is one of the following: Block, Requirement, Job Card, or Master Panel Card.
8. On the Activate page, provide the **Activate Description** and **Activate Reference**.
9. (Optional) If you are activating a revised definition, you can edit the **Revision Reason** and **Revision Notes** fields at this point to ensure information is accurate. Click **OK**.
10. If prompted, enter your password and click **OK**.

Compare two revisions of a task definition

About this task

CAMO can highlight the differences between two revisions of the same task definition. You start by displaying the revision of the task you want to compare, and then you select the revision to which you want to compare it.

Steps

1. Select the **Task Definition Search** menu item.
2. On the Task Definition Search page, enter the search criteria to find the task definition, for example, select the assembly or task definition class, or enter the task definition code.

3. Click **Search**.
4. In the Task Definitions Found list, click the link to the task definition.

   The details page of the task definition opens. By default, when you search for task definitions, CAMO displays the most recent revision. In the **Identification** area, you see the revision number and status of the task definition.

   Note If you want to display a different revision of the task definition, click the **Revision** tab and click the revision to display in the Revision History area.

5. On the details page of the task definition, click **Show Differences**.
6. On the Show Differences page, select the revision to which you want to compare the current revision, and click **OK**.

   The differences between the two revisions are highlighted in yellow.
7. When you have finished reviewing the differences, click **Hide Differences**.

Initialization

Initialization turns active task definitions into actual tasks for inventory to which the task definitions apply.

Only the active revision of a task definition can be initialized, unless the task definition is assigned to a maintenance program. Users can only initialize tasks definitions for organizations to which they belong.

Some task definitions are initialized manually by users, and some are initialized automatically by CAMO when certain conditions are met—for example, when a dependency exists between two tasks and the prerequisite task is complete. When the baseline synchronization process runs in CAMO, it automatically initializes task definitions that meet a certain criteria—for example, if a change made to a task definition caused the task definition to become applicable to an inventory item it did not apply to earlier.

Task dependencies create chains of task definitions which baseline synchronization initializes according to the dependency relationships. For example, following task definitions aren't initialized until prerequisite tasks are complete. If you have a task definition chain in which two different prerequisite task definitions have CRT dependencies to the same following task (all are on the same configuration slot), both of the prerequisites can be initialized at the same time.

When block definitions are initialized, CAMO assigns the requirements to the most appropriate block. When requirement definitions that are included in blocks are initialized, CAMO assigns the requirements to the most appropriate block, and initializes the job cards included in the requirement automatically. Users cannot initialize job cards manually. Initialization of requirements marked as Prevent Manual Initialization is skipped when they are contained in a block that is initialized.

If your CAMO system includes inventory for several operator organizations, and you initialize a requirement that is included in a maintenance program in CAMO, you can only create actual tasks for inventory that belongs to operators that have this specific revision of the requirement in their active maintenance programs.

For reference documents, if you want to initialize them in addition to activating them, you initialize them either as historical tasks—which indicate that your organization has already complied with the maintenance needs stated in the reference document by using requirements that were linked to the reference document—or you state that the reference document is not applicable to your fleet. Initializing reference documents is not necessary in the solution IFS proposes for managing Service Bulletins (SB) Airworthiness Directives (AD), and Engineering Orders (EO).

Related concepts

Task dependencies

Create New (CRT) dependency

Initializing task definitions manually

Most task definitions are initialized during baseline synchronization, but you can initialize a task definition by using the Initialize button on the task definition's details page.

Buttons available on this view are as follows:

- **Create Tasks**: Manually create active (ACTV) actual task for the selected inventory/inventories (multiple inventory selection allowed) to which the task definition applies. Clicking this button redirects back to the **Initialize Requirement** page.
- **Create Tasks and Set Deadlines**: Manually create active (ACTV) actual task for the selected inventory to which the task definition applies. Clicking this button redirects to the **Scheduling** tab of the newly created actual task.
- **Create Historical Task**: Manually create historical (COMPLETE) actual task for the selected inventory to which the task definition applies. Clicking this button redirects to the **Scheduling** tab of the newly created actual task.
- **Initialize as Not Applicable**: Manually create actual task in non-applicable (N/A) status for the selected inventory/inventories (multiple inventory selection allowed) to which the task definition applies. Clicking this button redirects back to the **Initialize Requirement** page.

Maintenix does not allow users to manually initialize **Master Panel Card** tasks. Further, **Reference Documents** can only be initialized via the **Initialize as Not Applicable** as this process differs from how other task types are initialized. This can be done on the **Initialize Reference Documents** page.

The task definition's initialization page lists all applicable inventory items for which you can create actual tasks. Besides including details like root inventory, assembly, and position, the page displays the following details on the tasks in the task definition:

- **Next Due/Last Completed Revision**: Displays the revision of the task definition containing the active task that is due to be completed next or the last completed task (if there are no more active tasks).
- **Next Due/Last Completed Status**: Displays the status of the task that is due to be completed next or the last completed task (if there are no more active tasks).
- **Active Instances**: Displays the number of active instances of a task. This number will be greater than one only if the tasks are based on follow-on requirements.

Note The columns described above will remain blank for inventory items against which no tasks have been initialized.

Preventing manual initialization of requirements

CAMO lets you prevent or allow manual initialization of a requirement's active tasks.

Sometimes you may want to prevent an on-condition requirement from being initialized anymore. This is commonly done after a new revision of the requirement has been written. It is similar to making a requirement obsolete, however by preventing initialization, CAMO will not cancel any currently running instances of the requirement.

You can prevent manual initialization of a requirement's active tasks by using the Prevent Manual Initialization button on the Requirement Details page. This functionality only applies to requirements that are on-condition.

Requirements marked as Prevent Manual Initialization cannot be manually created. They cannot be:

- created from a definition,
- created as a sub-task,
- initialized as part of a block,
- or initialized from a requirement.

Once a requirement has been marked as Prevent Manual Initialization, a different button called Allow Manual Initialization replaces the Prevent Manual Initialization button and the following message is displayed at the top of the Requirement Details page:

`MANUAL INITIALIZATION OF ACTIVE TASKS FOR THIS REQUIREMENT IS PREVENTED`

If you mark the requirement as Allow Manual Initialization, the message disappears. The requirement appears in the various task creation workflows and the Prevent Manual Initialization button is displayed.

In addition, every time you prevent or allow manual initialization of active tasks of the requirement, a History note is added to the Revision tab of the Requirement Details page.

Note When requirements marked as Prevent Manual Initialization are a part of a block, they are not initialized when the block is initialized.

On-condition task definitions

To handle tasks that are necessary only under certain conditions, you can create a task definition and select the on-condition attribute. On-condition definitions are initialized manually, or if they have a task dependency and the dependency is fulfilled, they are initialized automatically.

Here's an example of an on-condition definition that's automatically initialized because of a task dependency with another definition: after a repair is completed, an on-condition, FOLLOW class requirement definition for an inspection is automatically initialized. The pre-requisite requirement definition for the repair has a Create New dependency to the following on-condition requirement definition.

The on-condition option can be selected for these types of task definitions: non-recurring blocks, requirements, and reference documents.

The on-condition option is useful for the following type of tasks:

- Work that is optional or opportunistic; if there is time to perform additional work during a maintenance visit, the task definition can be initialized for the inventory undergoing maintenance.
- Work that becomes necessary only when specific events occur; for example, an inspection task that is necessary following a hard landing.
- Work that can or must be performed when a new inventory item is added to your CAMO system. In an on-condition task definition, you select the Review on Receipt check box to indicate that the task definition should be reviewed whenever new inventory—to which the task definition relates —is added to your CAMO system. Users can see the list of all review on receipt on-condition task definitions, assess whether any of them should be initialized for the new inventory item, and initialize those that are deemed necessary, on the Edit Inventory page, Step 4 - Edit task list for inventory.

Note A task definition that has the on-condition enabled is never initialized by baseline synchronization.The on-condition option should never be selected on task definitions that describe maintenance that must be performed on a mandatory schedule and for which you track your organization's compliance.

If you cancel an active, one-time, non-recurring block task that was created from an on-condition block definition, the block's sub-tasks are also canceled.

Related concepts

Task dependencies

Initialize an on-condition task

To address opportunistic, conditional, or new inventory-specific work, you can select an option to create a task based on a task definition, allowing you to initialize an on-condition task.

Steps

1. Go to the **Fleet List** tab.
2. On the **Fleet List** tab, select an aircraft, and then click **Create Task**.
3. On the **Select Component** page, select the radio button for the component for which the new task should be created.
4. On the **Task Selection** page, select the **Create Task Based On Task Definition** radio button.
5. In the **Blocks and Requirements** area, select the radio button beside the on-condition block or requirement to create.

   Tip To display only on-condition task definitions select the **Show Only On Condition Tasks** check box.

6. Click **OK**.
7. On the **Create Task** page, type the Effective From date or click to select the date; if applicable, set the usage parameters in cycles and hours.
8. Click **OK**.
9. If prompted, enter your password and click **OK**.

Task applicability

By default, each task definition applies to all of the possible inventory items that can fill the configuration slot specified in the task definition, or that match the part number of a task definition that is based on a part number. In reality however, not all task definitions apply to all possible inventory and not all steps in a job card apply to the same inventory. CAMO lets you specify the inventory to which task definitions and steps within task definitions apply.

There are two ways to assign task applicability in CAMO: the applicability range and the applicability rule.

Applicability range

The applicability range is specified in the task definition, and it consists of one or more applicability codes separated by commas; you use a hyphen to include several sequential codes in the applicability range. You can assign an applicability code to any piece of inventory with an inventory class of aircraft or assembly. The task definition only applies to inventory that has an applicability code that is within the applicability range of the task definition.

For task definitions defined on a system or tracked configuration slot that have an applicability range, CAMO looks at the applicability code of the root inventory—the aircraft or the sub-assembly inventory.

Using an applicability range lets you set the applicability regardless of the various individual identifiers that may be used in a mixed fleet; for example, one aircraft manufacturer may define applicability using the part number, whereas another manufacturer uses the fin number. For engines, an internal tracking number may be used. By using applicability codes, all of the applicability ranges can be specified without having to determine which field to use.

If a task definition (executable requirement or job card) includes job steps, you can also set the applicability range for each step. Different steps in one task definition can have different applicability ranges.

The following table provides some examples of applicability ranges.

Applicability range examples

Applicability Range	Result
332, A12	Includes only 332 and A12.
332, 348-350	Includes 332, 348, 349, 350. Also includes any **3-character** string that is within the range, such as 34A, 34Z. Does not include 35A.
A100-A199	Includes: A100, A101, ..., A199. Also includes any **4-character** string that is with the range, such as A10A, A18Z. Does not include A, A1, A10, A19A.
	If the applicability range is blank (not specified), it includes all inventory.
N/A	Does not include any inventory.

Note

If an inventory item does not have an applicability code—the field is left blank in the inventory record—all task definitions defined on the corresponding assembly apply to the inventory, regardless of the applicability range set in the task definitions.

Applicability rule

Another way to assign task applicability is to define an applicability rule. (You can use applicability rules with task definitions, but to specify applicability for job steps, you can only use applicability ranges.)

To define the applicability rule when you create the assembly or component in CAMO, you can use any of the following identifiers:

Identifiers used in applicability rules

Common Name	Identifier to be Used
Aircraft Part Number	[Aircraft Part No]
Aircraft Serial Number	[Aircraft Serial No]
Aircraft Fin Number	[Aircraft Fin No]
Aircraft Var Number	[Aircraft Var No]
Aircraft Line Number	[Aircraft Line No]
Aircraft Operator	[Aircraft Operator]
Assembly Part Number	[Assembly Part No]
Assembly Serial Number	[Assembly Serial No]
Assembly Operator	[Assembly Operator]
Assembly Owner Name	[Assembly Owner Name]
Assembly Owner Code	[Assembly Owner Code]
Component Part Number	[Component Part No]
Component Serial Number	[Component Serial No]
Component Lot Number	[Component Lot No]

Common Name	Identifier to be Used
Component Manufacturer	[Component Manufacturer]
Component Owner Name	[Component Owner Name]
Component Owner Code	[Component Owner Code]

A basic applicability rule can be created using the following format:

[Aircraft Part No] = 'B767-232'

This applicability rule states that this task definition applies to all inventory that has an aircraft part number of B767-232.

Note

The part number must be in quotes for CAMO to treat it as a character string.

More complex applicability rules can be created using the operators in the following table.

Applicability Rule Operators

Operator	Description
=	The value before the operator is equal to the value after the operator. The two operands must have the same number of characters.
and	Both the expression before and the expression after the 'and' must be met.
or	Either the expression before or the expression after the 'or' must be met.
and not	The expression after the 'and not' is excluded.
( )	The open and close bracket are used to group information together. Any operations within the brackets are performed first.
<	The value before the operator is less than the value after the operator.
<=	The value before the operator is less than or equal to the value after the operator.

Operator	Description
>	The value before the operator is greater than the value after the operator.
>=	The value before the operator is greater than or equal to the value after the operator.
BETWEEN	This operator is used to select a range of data between two values. This operator can be used for strings, integers, and dates: BETWEEN 'string1' AND 'string2' BETWEEN integer1 AND integer2 BETWEEN date1 AND date2 The result includes the boundary values such as 'string1', 'string2', integer1, and integer2.
IN	The value before the operator matches one of the values specified after the operator (in brackets, and separated by commas).
LIKE	The character string before the operator matches the character string after the operator (which contains wildcard characters "%" and/or "_"). "%" can be any number of characters. "_" can be any single character. **Note** Wildcard characters cannot be used on the Unconstrained Task Definition and Unconstrained Task search pages.
NOT	Negates the logical value of the expression that it precedes. For example: NOT('123'='123') is FALSE
TO_CHAR	The TO_CHAR operator converts a column's content to a string. The syntax is as follows: TO_CHAR(number)

Operator	Description
TO_NUMBER	The TO_NUMBER operator converts a string to a number. The syntax is as follows: TO_NUMBER('string')
SUBSTR	The SUBSTR functions allows you to extract a substring from a string. The syntax is as follows: SUBSTR(string, start_position, [length]) This operator can be used with the TO_NUMBER operator to use a section of a string, and then convert it to a number. For example: TO_NUMBER(SUBSTR([Component Serial No],-6,6)) >= 055555 If the start_position is negative, count the number of characters starting from the end of the string. For example, SUBSTR('Maintenix',-3,3) is 'nix', the last 3 characters of 'Maintenix'.

The applicability rule validation logic in CAMO verifies column names and functions, but not the syntax, nor does it guarantee correct results.

CAMO stores the identifiers used in applicability rules as character strings. While defining your applicability rules, you must consider character string comparison conventions and rules, such as the following:

- Any constant used in the rules must be in quotes because CAMO treats them as character strings, not numeric values.

  [Aircraft Part No] = '100' is a valid rule

  [Aircraft Part No] = 100 is not a valid rule
- The operands on both sides of the **equality** operator, =, must have the same length. Otherwise, the comparison result is FALSE, implying that the two operands are not equal.
- The operands for the **less than** ,< , and the **greater than** ,> , operators do not have to have the same length. Characters in strings are compared one by one, starting from the left, until an inequality is found.

  '9' < '10' is FALSE, because the ASCII code for 9 (57) is greater than the ASCII code for 1 (49)

  '09' < '10' is TRUE

Examples:

1. [Aircraft Part No] = '123' **and** [Component Serial No] > '456 ' **and not** [Component Manufacturer] = 'ABC Inc.'

   This expression is TRUE when all of the following statements are true:

   - The aircraft part number is 123.
   - The lot number is greater than 456.
   - The manufacturer is not ABC Inc.

2. **(** [Component Part No] **<** '200' **and** [Component Manufacturer] **=** 'ABC Inc.' **) or (** [Component Part No] **>** '400' **and** [Component Manufacturer] **=** 'XYZ Inc.' **)**

   Applies to the following inventory:

   - Part numbers smaller than 200, manufactured by ABC Inc.

     If the component part number is '100', [Component Part No] **<** '200' is TRUE.

     If the component part number is '0100', [Component Part No] **<** '200' is FALSE, because the two operands of the character comparison are not of the same length.

     If the component part number is '300', [Component Part No] **<** '200' is FALSE.

3. Part numbers bigger than 400, manufactured by XYZ Inc.

   If the component part number is '500', [Component Part No] **>** '400' is TRUE.

   If the component part number is '0500', [Component Part No] **>** '400' is FALSE, because the two operands of the character comparison are not of the same length.

   If the component part number is '300', [Component Part No] **>** '400' is FALSE.

4. [Aircraft Fin No] **IN** ('200','210','220')

   The fin number must be one of 200, 210, or 220.

   This rule is equivalent to **(** [Aircraft Fin No] **=** '200' **) or (** [Aircraft Fin No] **=** '210' **) or (** [Aircraft Fin No] **=** '220' **)**

5. [Aircraft Fin No] **NOT IN** ('200','210','220')

   The fin number can be anything other than 200,210, or 220.

6. **SUBSTR** ([Assembly Owner Name], 1, 2) **BETWEEN** 'AA' **AND** 'AC'

   The assembly owner name must start with 'AA' , 'AB' , or 'AC' .

7. **TO_NUMBER** ([Component Part No]) **BETWEEN** 100 **AND** 120

   The component part number is between 100 and 120 (includes 100 and 120).

8. **SUBSTR** (**TO_CHAR** ([Component Part No]), -1, 1) **=** '0'

   The component part number ends with a zero.

9. [Component Manufacturer] **LIKE** 'A%'

   Any manufacturer name that starts with "A".

10. [Component Lot No] **LIKE** 'A_'

Any two-character lot number that starts with "A".

Aircraft Applicability

A task definition that applies to certain aircraft, regardless of what component is on the aircraft, should have the applicability rule set to the aircraft on which the component is installed. Be aware that if this component is removed for another reason, the task is still applicable to the aircraft regardless of what inventory is installed in its place.

For aircraft applicability use Applicability, Aircraft Part Number, Aircraft Serial Number, Aircraft Fin Number, Aircraft Var Number, and Aircraft Line Number.

- *Aircraft Fin Number* is a number given by an airline to each of the aircraft in their fleet.
- *Aircraft Var Number* is a number assigned to an aircraft during manufacturing. It is often referenced in documentation sent to the airlines, such as service bulletins (SBs).
- *Aircraft Line Number* is also a number assigned (by the OEM) to an aircraft during manufacturing. It represents the sequence number of the aircraft coming out of the assembly line for that aircraft type, for example, the 1275th aircraft of a particular aircraft type. It is often referenced in documentation sent to the airlines, such as SBs.

Component Applicability

A task definition that applies to specific component inventory, regardless of what aircraft or assembly it is installed on, should have the applicability rule set for the component itself. You can specify which inventory items apply by Component Part Number, Component Serial Number, Component Lot Number, Component Manufacturer, or Component Owner.

Creating or canceling tasks on installation or removal

CAMO can automatically change which maintenance requirements or blocks are active for a component when that component is installed on an aircraft, installed on another component, or removed from an aircraft or other component.

Some maintenance must be completed on a component only when that component is installed on an aircraft, or installed on another component. For example, while on-wing, a component requires a recurring visual inspection.

Other work is necessary only when a component is loose. For example, while in storage, tires need to be rotated or batteries recharged.

When you create task definitions, you can select options from the Create/Cancel on Install list and from the Create/Cancel on Removal list. You have the flexibility to select one option from each list to suit your scheduling needs or you can select one option from just one list.

These create or cancel on install or removal scheduling options can be set on configuration slot and part number-based requirement definition types.

The Create/Cancel on Install list includes the following options:

Create on aircraft install

Tasks are created when the component is installed on an aircraft. Sub-components that have task definitions with the Create on Aircraft Install check box selected also have their tasks initialized when the parent component is installed.

Create on install

Tasks are created when the component is installed on a direct parent component. The parent can be off-wing or on-wing and can be an aircraft.

By default, Create on Install tasks are only created when components are installed on their direct parents. If the component has sub-components and those sub-components have task definitions with the Create on Install check box selected, tasks are not initialized on the sub-components when their parent component is installed.

But, CAMO can be configured to initialize Create on Install tasks for installed sub-components when their parent component is installed on an aircraft- unless ACTV tasks already exist for those sub-components. When defining Create on Install tasks, it is important to understand the behavior that your system is configured to use because there might be situations where users need to manually update scheduling.

If sub-components are created as installed when a parent component is created in CAMO, this does not trigger initialization of Create on Install tasks for the sub-components, and the recorded date of installation is not the actual date that the sub-components were installed on the parent. For example, cartridge sets that contain cartridges are installed on ejection seats. Each of the cartridges has its own config slot and a Create on Install discard task that needs to be scheduled from when the cartridge set is installed. If the CREATE_CHILD_TASKS_ON_INSTALL configuration parameter is set to true, the missing tasks on installed sub-components are initialized when their parent component is installed on an aircraft.

Cancel on aircraft install

Tasks are terminated when the component is installed on an aircraft. If the component has sub-components that have task definitions with the Cancel on Aircraft Install check box selected, sub-component tasks are also terminated when the parent component is installed.

Cancel on install

Tasks are terminated when the component is installed on any component other than an aircraft. For example, it may be installed on an engine, but not put on-wing.

Note Tasks created on an install, are created when the component is installed as a result of a part requirement on another task, or when it is installed for other reasons and the inventory record of the parent component on which it is installed is updated using the Attach Inventory button.

The Create/Cancel on Removal list includes the following options:

Create on aircraft removal

Tasks are created when the component is removed from an aircraft. Sub-components that have task definitions with the Create on Aircraft Removal check box selected also have their tasks initialized when the parent component is removed.

Create on removal

Tasks are created when the component is removed from a direct parent component. The parent can be off-wing or on-wing and can be an aircraft.

Cancel on aircraft removal

Tasks are terminated when the component is removed from an aircraft. Sub-components that have task definitions with the Cancel on Aircraft Removal check box selected also have their tasks terminated when the parent component is removed.

Cancel on removal

Tasks are terminated when the component is removed from any component other than an aircraft. For example, it may be removed from an engine.

Note The Cancel functionality permanently terminates the task—the task is not re-initialized the next time baseline synchronization runs.

Related concepts

Baseline synchronization
Storage maintenance

Modeling component maintenance

Component maintenance refers to work that requires the removal of a component or a part from a top level asset (aircraft or other assembly) or from its immediate parent component in the equipment hierarchy. This work is completed in a maintenance shop location by technicians who do not work on the aircraft. Replacement requirement definitions (REPLs) are used to remove the component from the aircraft, assembly, or parent component.

Task definitions for components are associated with any of the following:

- Configuration slots with config classes of: sub-assembly (SUBASSY) or tracked (TRK).
- Part numbers with inventory classes of: Kit, Batch, Serial-Controlled, and Tracked.

CAMO provides the following features to address the particular aspects of component maintenance:

- Automatic creation of work packages for components and replacement tasks.

When a component is removed from the top-level asset, and there is a maintenance task initialized for the component that specifies the component must be removed from the asset, CAMO automatically creates a component work package for that task. When maintenance tasks are initialized against a component that is installed on an asset, CAMO creates replacement requirements on the asset, so that the component is removed from the asset.

When a maintenance task is initialized for a component on a configuration that has multiple positions, CAMO creates the component work packages and the required replacement tasks for each of the positions. The name of the component work packages includes the position name.

Users can also create the component work packages and replacement tasks manually.

- Ability to identify component tasks that should be performed at the next convenient opportunity, but that are not critical to the point of preventing the use of a component when the tasks are not completed by their due date. This feature is called Next Shop Visit.
- Enforcement of the order in which the sub-tasks of a component requirement must be performed, and the ability to route components to different specialized shop locations as needed.
- Creation of repair orders for component maintenance work to be performed by external vendors.

For repairing faults and managing ongoing maintenance related to fault repairs, you can use repair reference requirement definitions.

Related concepts

Repair management

Component work packages and replacement tasks

When you create task definitions for component maintenance, the choice you make for the Must Be Removed scheduling attribute works together with the LRU/SRU identity of the inventory's part group to determine how CAMO automatically creates component work packages and the required replacement tasks to remove components from the higher-level inventory.

You can create component tasks and replacement tasks manually, but in this situation work packages are not created automatically and the component work packages must also be created manually.

Must Be Removed is a scheduling attribute of blocks and all requirement task definitions, except for replacement requirements. It does not apply to Job Instruction Cards. Within this sub-set of task definitions, the Must Be Removed drop-down list is only available when you create or edit the following task definitions:

- Part number type task definitions with an ASSY, TRK, or SER inventory class. Do not use the Must Be Removed field for task definitions you create for kit part numbers.

- Config slot type task definitions for TRK, or SUBASSY config slot

When you schedule requirements, you can specify whether a component must be removed for work to be done on it. You can specify the following values for the Must Be Removed attribute:

- Off-wing: The component itself must be removed or detached from its highest assembly – the aircraft, or, if the component itself cannot be removed directly from the aircraft, the closest parent of the component that can be removed from the aircraft must be removed before the task is performed.
- Off-parent: The component must be removed or detached from its immediate parent in the equipment hierarchy of the assembly before the task is performed. The Off Parent option is only available for:
  - Part number type task definitions with an ASSY, TRK, or SER inventory class.
  - Config slot type task definitions with a TRK config slots.
- N/A: The component does not need to be removed. This is the default setting.

For tasks that can be completed when the component is installed, leave the Must Be Removed setting as N/A. If the setting is N/A, component work packages and replacement tasks are not automatically created. This gives you the option to complete a task while the component is still installed. If you decide to complete the work off-wing, you can use the Convert to Component Replacement button in CAMO to create the component work package and replacement task.

If you select off-parent or off-wing, for components that belong to LRU or SRU part groups, then CAMO automatically creates work packages and replacement tasks. The combination of the Must Be Removed attribute and the LRU/SRU part group label determine whether and how work packages and replacement tasks are automatically created.

When a task definition that specifies the component must be removed is initialized, CAMO also assigns replacement requirements to work packages, or creates work packages when none exist. Maintenance planners can assign more tasks to any work package that CAMO creates.

When an off-wing or off-parent task is initialized against a component, that component must be removed before you can start the task. When you install a component on an aircraft or assembly while the component has initialized off-wing or off-parent tasks against it, that component must be scheduled to be removed again, at a later date, before the tasks on the component can begin. CAMO automatically creates the necessary replacement tasks to remove components, and packages tasks into new or existing work packages.

The automatic creation of work packages and replacement tasks does not apply to component tasks that are identified as Next Shop Visit tasks, nor does it apply to component tasks that are:

- Created from a task definition that does not specify that the component must be removed off-wing or off parent.
- Created without the use of a task definition. These are referred to as ad hoc component tasks.

Related concepts

Line and shop replaceable units
Replacement requirements
Manual creation of component work packages and replacement tasks

How component work packages are created automatically

The combination of the Must Be Removed attribute on task definitions, the LRU/SRU part group labels, and the position of the components in the configuration hierarchy, determine what work packages and replacement tasks are created automatically.

The way in which CAMO automatically creates component work packages and replacement tasks depends on whether:

- The task is off-wing or off-parent.
- The component against which the task is assigned is a line replaceable unit (LRU) or a shop replaceable unit (SRU). An LRU is a component or assembly that can be removed from its parent at the line maintenance location, whereas an SRU cannot.
- The component is located below a system or tracked configuration slot of a top-level assembly (such as an aircraft), or below a sub-assembly configuration slot in the configuration hierarchy.
- The sub-assembly configuration slot is currently attached to or detached from its parent system slot.

When an off-wing or off-parent task is initialized against an LRU component, CAMO:

- Finds or creates a work package on that LRU component, and then assigns the off-parent or off-wing task to that work package.
- Creates an open replacement task on that LRU's parent component to remove the LRU component.

When an off-parent task is initialized against an SRU component, CAMO:

- Finds or creates a work package on the next highest LRU component in the inventory hierarchy, and then assigns the off-parent task to that work package.
- Creates a replacement task on the SRU's parent, to remove the SRU component, and then assigns that replacement task to the work package on the next highest LRU component.
- Creates an open replacement task on the parent component of the next highest LRU to remove the next highest LRU component.

When an off-wing task is initialized against an SRU component, CAMO:

- Finds or creates a work package on the next highest LRU component in the inventory hierarchy, and then assigns the off-wing task to that work package.
- Creates an open replacement task on the parent component of the next highest LRU to remove the next highest LRU component.

To create the replacement tasks, CAMO uses a replacement requirement definition, if one exists. If there is no replacement requirement in the baseline, CAMO creates an ad hoc replacement task, and adds a part requirement to remove the inventory item.

Each time it creates a replacement task, CAMO copies the scheduling rules and task priority of the originating off-wing or off-parent requirement to the replacement task. The replacement task has the same deadline as the driving task of the component work package. If the driving deadline of the component work package changes, CAMO updates the deadline on the replacement task to match. Users cannot edit the deadline of the replacement task.

If the component is removed by a task other than the auto-generated replacement task, CAMO cancels the auto-generated replacement task.

Component work package deadlines work the same way as deadlines for other work packages. The driving deadline for a component work package is the deadline of the task that is due the earliest and that has a hard deadline. If the work package has only tasks with soft deadlines, there is no driving deadline for the work package. The earliest due hard deadline in the component work package is copied to the replacement task as its due date.

Note By default, CAMO does not allow off-wing or off-parent tasks to be assigned to aircraft work packages. (Organizations that want this behavior, can enable the ALLOW_OFF_PARENT_TASKS_IN_ACFT_WP configuration parameter).

If the Must Be Removed attribute on a task definition is revised from N/A to Off-wing or Off-parent and the revised definition is initialized, CAMO automatically makes required changes including creating a REPL task for the appropriate parent configuration slot and assigning the actual task to an existing or created-for-purpose component work package. If a task definition is revised in reverse fashion - the Must Be Removed attribute is revised from Off-wing or Off-parent to N/A, you must manually manage required changes to tasks and work packages.

Scenario 1: Initializing a task on an SRU component on a system

The following scenario describes the actions that CAMO performs when off-wing or off-parent tasks are initialized on an SRU component under a parent SRU.

When an off-wing task is initialized against SRU-2, CAMO does the following:

- Assigns the off-wing task to a work package on LRU-1 if one exists, or creates a work package and assigns the off-wing task to that work package.
- Creates an open replacement task on the system slot, to remove LRU-1. The due date of the off-wing task is copied to the replacement task for LRU-1.

  When the replacement task on LRU-1 is due soon, a maintenance planner assigns it to an existing work package for the aircraft or other top-level assembly, or creates a new work package for the task.

When an off-parent task is initialized against SRU-2, CAMO does the following:

- Assigns the off-parent task to a work package on LRU-1 if one exists, or creates a work package and assigns the off-parent task to that work package.
- Creates a replacement task to remove SRU-2 from SRU-1, and assigns it to the work package on LRU-1.
- Creates an open replacement task on the system slot, to remove LRU-1 from the aircraft or other assembly. The due date of the off-parent task is copied to the replacement task for LRU-1.

  When the replacement task on LRU-1 is due soon, a maintenance planner assigns it to an existing work package for the aircraft or other top-level assembly, or creates a new work package for the task.

The following diagram shows a partial inventory hierarchy for an SRU component on a system or tracked configuration slot of a top-level assembly, such as an aircraft.

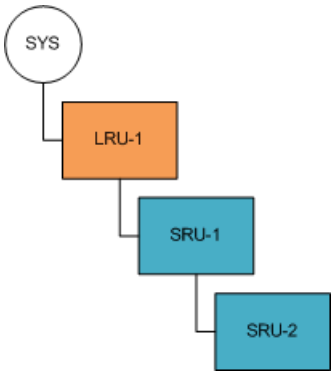

Scenario 2: Initializing a task on an LRU component on a system

The following scenario describes the actions that CAMO performs when off-wing or off-parent tasks are initialized on an LRU component under a system or a tracked configuration slot of a top-level assembly.

When either an off-wing or off-parent task is initialized against LRU-2, CAMO assigns that task to a work package on LRU-2. CAMO also creates an open replacement task on the SRU-1, to remove LRU-2.

The following diagram shows a partial inventory hierarchy for an LRU component on a system or tracked configuration slot of a top-level assembly.

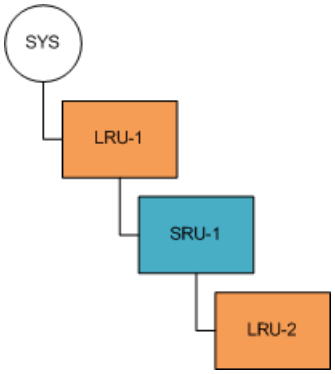

Scenario 3: Initializing a task on an SRU component on a sub-assembly

The following scenario describes the actions that CAMO performs when off-wing or off-parent tasks are initialized on an SRU component under a sub-assembly.

When an off-wing task is initialized against SRU-2, CAMO does the following:

- Assigns the off-wing task to a work package on the sub-assembly if one exists, or creates a work package and assigns the off-wing task to that work package.
- If the sub-assembly is currently attached to an aircraft system configuration slot (not pictured), CAMO creates an open replacement task to remove the sub-assembly from the aircraft. The due date of the off-wing task is copied to the replacement task for the sub-assembly. If the sub-assembly is currently detached, no replacement task is created.

  When the replacement task on the sub-assembly is due soon, a maintenance planner assigns it to an existing work package for the aircraft if one exists, or creates a new work package for the task.

When an off-parent task is initialized against SRU-2, CAMO does the following:

- Assigns the off-parent task to a work package on the sub-assembly if one exists, or creates a work package and assigns the off-parent task to that work package.
- Creates a replacement task to remove SRU-2 from SRU-1, and assigns the task to the sub-assembly work package.
- If the sub-assembly is currently attached to an aircraft system configuration slot (not pictured), CAMO creates an open replacement task to remove the sub-assembly from the aircraft system slot. The due date of the off-parent task is copied to the replacement task for the sub-assembly. If the sub-assembly is currently detached, no replacement task for the sub-assembly is created.

  When the replacement task on the sub-assembly is due soon, a maintenance planner assigns it to an existing work package for the aircraft if one exists, or creates a new work package for the task.

The following diagram shows a partial inventory hierarchy for an SRU component on a sub-assembly configuration slot.

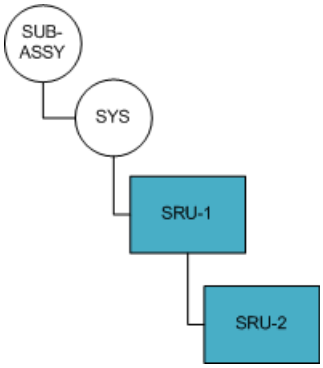

Scenario 4: Initializing a task on an LRU component on a sub-assembly

The following scenario describes the actions that CAMO performs when off-wing or off-parent tasks are initialized on an LRU component under a sub-assembly.

When either an off-wing or off-parent task is initialized against LRU-1, CAMO assigns that task to a work package on LRU-1. CAMO also creates an open replacement task on the SRU-1, to remove LRU-1.

The following diagram shows a partial inventory hierarchy for an LRU component on a sub-assembly configuration slot.

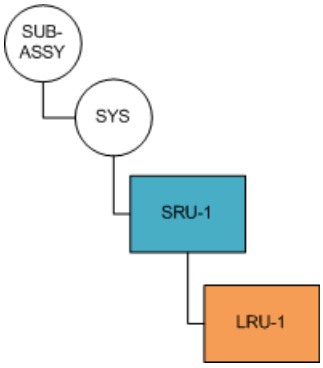

Related concepts

Line and shop replaceable units

Component removal due to faults

A component can be removed from an aircraft prior to its scheduled removal due to a fault.

When a component is removed because of a fault raised on an aircraft in CAMO, a copy of the fault is automatically created on the component, a component work package is created, and the fault is assigned to that work package.

If a scheduled component task was assigned to a scheduled component work package, that task is reassigned to the component work package created because of the fault. The component

replacement task that was created for the scheduled removal is canceled because the component is no longer installed on the aircraft.

Related concepts

Repair management

Manual creation of component work packages and replacement tasks

Users can create replacement requirements manually; for example, a maintenance planner who needs to rob a component from one aircraft to install it on another, or to replace a component identified as a Shop Replaceable Unit (SRU) directly from the aircraft without removing the SRU's parent component.

When replacement tasks are created manually, CAMO does not create component work packages automatically. If a component work package is required to repair the removed component, it must be created manually.

Replacement requirements are created in the same manner as any other on condition tasks. Replacement requirement definitions do not have scheduling rules; therefore, the replacement tasks created manually from the definitions cannot have hard deadlines. However, you can set a Plan By Date. This date is displayed as the due date for the replacement task in the Open Tasks list for the parent aircraft. It is identified as a Plan By Date, and it does not become overdue.

Related concepts

Component work packages and replacement tasks

Next shop visit tasks

Next Shop Visit (NSV) is an option that you can enable on block and requirement definitions created for components.

Tasks that are initialized from such task definitions are referred to as NSV tasks. NSV tasks are useful to model work that needs to be performed the next time the component is in the shop, but the task is not critical enough to pull an aircraft out of service just to get at the component. The Next Shop Visit option is a way of expressing that the component task must be done at the next convenient opportunity, for example, the next time the component is sent to a maintenance shop for some more critical work.

Because they should not affect the serviceability of an aircraft, NSV tasks always have a soft deadline. Unlike most other tasks, the deadline on an NSV task indicates the earliest date by which the task must be performed, not the drop-dead date. If you provide a deadline on an NSV tasks, the task can safely be ignored until that deadline has passed.

To avoid forcing maintenance planners to manage NSV tasks as part of their work packaging activities, CAMO does not create a replacement task (REPL) automatically to drive the removal of

the component from the aircraft or from its parent component, and CAMO does not automatically create a component work package for the task.

However, whenever a work package is created on a component (either manually, or automatically because a non-NSV task exists for the component), CAMO automatically looks for NSV tasks to include in the work package.

Enforcing job card order in the workscope

When creating a requirement definition for component maintenance work for which the sub-tasks must be done in a specific order, you select the Enforce Workscope Order option. This ensures that the order of the job cards in the requirement cannot be changed when the requirement is initialized and included in a committed work package.

When you create or revise the requirement definition, you can adjust the order of the job cards included in the requirement, as long as the job card definitions are in the build or revision status, not active.

The order that is enforced is that of the job cards in the requirement in relation to each other. In the component work package that includes the requirement, maintenance planners can add other executable tasks, and move them in the workscope so that they are between the job cards of the requirement, as long as the relative order of the job cards of the requirement is maintained.

On the Work Package Details page, the order of job cards specified in the requirement definition is listed in the Baseline Order column on the Assigned Tasks tab.

Enforcing the order of the job cards in component work packages is particularly useful when each task must be done at different maintenance shops that have different specialties, because it also allows maintenance planners to assign a different location to each job card.

Workscope Ordering for Repair Routing

You can create a shop visit workscope that includes routine and estimated non-routine work, and you can use workscope ordering to ensure that the tasks in a component work package are completed in a specific order, and that each task is completed at a specific shop location.

The following diagram depicts workscope ordering. Each task in the work package is assigned an order and a location. Task #1 is set to be completed first at location AA. Task #2 is set to be completed second at location BB. Task #3 is set to be completed last at location CC. If workscope ordering is not enforced, each task could be completed in any order, and logical repair routing is not ensured.

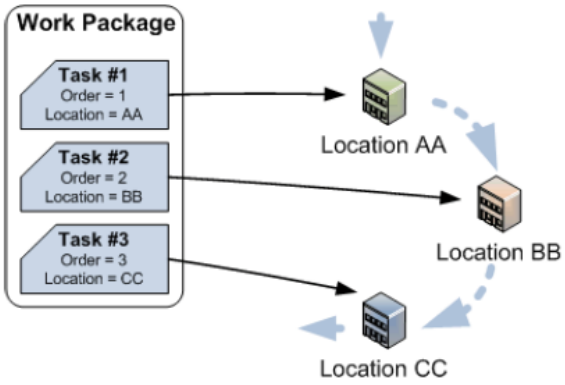

Enforcing Workscope Order

You can enforce workscope ordering when creating a component work package, or you can use the **Toggle Enforce Workscope Order** button to enable workscope ordering after the work package is committed and the workscope is generated. You can turn enforce workscope ordering off, but if the task ordering was violated while the workscope ordering was not enforced, you cannot turn the enforce workscope ordering back on.

When a work package is committed, tasks that are not already assigned to a location are automatically assigned to a location with the capability for the task's work type within the work package supply location. See *Automatic Assignment of Tasks to Shop Locations*.

Each time a task is started, paused, or finished, CAMO verifies that the task order is not violated. When tasks are batch completed or auto-completed, the workscope order is ignored.

Automatic Assignment of Tasks to Shop Locations

When a component work package scheduled to be done internally is committed, CAMO assigns the tasks automatically to shop locations that are within the supply location where the work package is committed, and that have the capability to perform the tasks. You can change the assigned locations manually. Only the tasks that were not already assigned to a location are assigned.

Tasks are matched to a location whose capabilities match the work type and assembly of the task. A location that has a work type associated with the "Any Part" assembly is suitable for any task that has that work type, regardless of the assembly of the task. If the task is for a part that is not associated with a specific assembly—for example a serial-controlled part that can be installed on all assemblies—the suitable shop locations are those that have the same work type as the task, and for which the work type is associated with Any Part.

When the component work package is committed, CAMO assigns locations to each task in the work package as follows:

- If there are several shop locations that have the work type and the assembly of the task, CAMO sorts the locations alphanumerically based on their location codes, and it assigns the first location in the sorted list.
- If there are several locations that have the work type of the task and Any Part, and the task is for a part that is not associated with a specific assembly, CAMO sorts the locations alphanumerically based on their location code, and it assigns the task to the first location in the sorted list.
- If one location matches the work type and assembly of the task, and another matches the work type but has Any Part, CAMO selects the location that matches both the work type and the assembly.

  Tip If you have two locations—Shop A and Shop B—that can perform the same work type on any assembly, but Shop B is particularly efficient at doing that work on a tracked part that is only installed on Assembly X, you can do the following:
  - Assign the capability of "Work Type + Any Part" to both locations.
  - Assign the capability of "Work Type + Assembly X" to Shop B.

  A task of that work type for the Assembly X part will be assigned to Shop B, despite the fact that both shop locations can do the work, because Shop B has the capability explicitly for the assembly of the task, and is therefore considered more suitable than a location with Any Part.

- If a capability is not specified in the task, then no location is assigned. You must assign the task to a location manually.

Tags

You can link blocks, requirements, and other types of task definitions together in CAMO by using tags.

You can create tags from the Tags tab or menu page, and on the specific Tag Details page you can search for and tag task definitions to link them together under a specific tag. Tags are identified by their name, a unique tag code, and a description.

Task definitions can be tagged for the purpose of generating tagged task definition reports. The task definition report will list all the task definitions assigned to that specific tag and it indicates the following information: the status, the revision number, the configuration slot, the task originator, and the work type.

Tags are also used in the IFS Fleet Planner integration for identifying which blocks or task definitions must be exported from Maintenix to IFS Fleet Planner.

Create a new tag

You can create a new tag for linking task definitions together.

Steps

1. Go to the **Tags** tab.
2. Click **Create Tag**.
3. On the **Create Tag** page, provide the following information:
   - **Code**: Enter the unique code for the tag.
   - **Name**: Enter the name for the tag.
   - **Description**: Enter a text description for the tag.

   Tip If you want to edit the tag afterwards, go to the **Tag Details** page and in the **Identification** area click the **Edit Tag** icon.

4. Click **OK**.

Tag a task definition

You can link task definitions together by applying a tag.

About this task

Steps

1. Go to the **Tags** tab.
2. Click the tag code.
3. On the **Tag Details** page, click the **Task Definition Search** button.
4. On the **Task Definition Search** page, select the search criteria, and click **Search**.
5. Select the task definition check box and click **Tag Task Definition**
6. In the **Tag Task Definition** pop-up window, select the check box for the tag and click **Tag**.

On the **Tag Details** page, the newly added task definitions definitions are displayed in the **Task Definitions** area.

Tag a block definition

You can link block definitions together by applying a tag.

About this task

Steps

1. Go to the **Tags** tab.

2. Click the tag code.
3. On the **Tag Details** page, click the **Block Search** button.
4. On the **Block Search** page, select the search criteria, and click **Search**.
5. Select the block check box and click **Tag Task Definition**.
6. In the **Tag Task Definition** pop-up window, select the check box for the tag and click **Tag**.

On the **Tag Details** page, the newly added blocks are displayed in the **Task Definitions** area.

Tag a requirement definition

You can link requirement definitions together by applying a tag.

About this task

Steps

1. Go to the **Tags** tab.
2. Click the tag code.
3. On the **Tag Details** page, click the **Requirement Search** button.
4. On the **Requirement Search** page, select the search criteria, and click **Search**.
5. Select the requirement check box and click **Tag Task Definition**.
6. In the **Tag Task Definition** pop-up window, select the check box for the tag and click **Tag**.

On the **Tag Details** page, the newly added requirement definitions are displayed in the **Task Definitions** area.

Generate a tagged task definition report

After you create tags and tag task definitions, blocks, or requirements, you can generate a tagged task definition report.

Prerequisite

You must create a tag with assigned task definitions, and the **Tag Details** menu item must be assigned to your user role.

About this task

Information on assigning menu items to user roles is described in the *CAMO Administration Guide*

Steps

1. Go to the **Tags** tab.
2. Click the tag code.
3. On the **Tag Details** page, navigate to your user role's drop-down list and click the **Tag Details** menu item.

The **Tag Details** menu item is context sensitive. It will only display if you are on the **Tag Details** page (from the **Tags** tab). If you are on any other CAMO page, this menu item will not display on your user role's drop-down list.

A new browser window appears, displaying a PDF copy of the tagged task definition report. Depending on your browser settings, you may be able to directly print the PDF or download it to your device or desktop.

Task dependencies and links

In addition to the relationships that exist between tasks because of their respective task definition types (requirements grouped into blocks and job cards grouped in requirements), you can create other relationships between tasks by creating dependencies or informational links between task definitions.

Task dependencies

Task dependencies cause a requirement, called the following task in the Maintenix UI, to be created, terminated, or completed when the prerequisite requirement is completed.

For example, a task dependency is used for a repair task that requires a follow-on inspection. When the repair task (the prerequisite) is completed, the inspection task (the following task) is created.

Both the prerequisite task and the following task must belong to the same organization, or share the same non-root parent organization.

In CAMO, you create a task dependency by identifying the following task that is associated with a requirement definition. On the Details tab of the task definition in CAMO, you can see all dependencies a requirement definition has to other requirement definitions, whether the requirement definition is the prerequisite task or the following task:

- When a requirement is the prerequisite task in a dependency, the following requirement definition is listed in the Following Tasks area.
- When the requirement is the following task in the dependency, the prerequisite requirement is listed in the Previous Tasks area.

You can create following task dependencies on requirement task definitions that are in Build or Revision status. You should not create following task dependencies in reference documents definitions because they are never initialized as active tasks; the work described in reference documents is executed and completed using linked requirement definitions.

There are four types of task dependencies in CAMO:

- Create New (CRT)
- Terminate Task (TERMINATE)
- Complete Task (COMPLETE)

- Post-Create (POSTCRT)

Related concepts

Initialization

Create New (CRT) dependency

In a create new dependency, when the prerequisite task is completed, an instance of the following task is created automatically.

To ensure accurate usage-based deadlines on following tasks, CAMO enforces rules for this type of dependency. You can define Create New (CRT) dependencies only between two requirement definitions that are associated with the same tracked configuration slot, any two system configuration slots, or any combination of the root configuration slot and a system configuration slot on the assembly.

In the following diagram, Task A is a modification task that fixes a problem on an aircraft, but the fix must be verified once the aircraft has been able to fly with it for a period of time. Task B is an inspection task to be performed 120 flights after Task A is completed. Therefore, Task A must have a following task dependency to create Task B. After Task A is completed, Task B is created, and has a deadline of 120 flights.

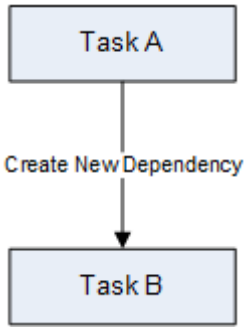

Create New (CRT) dependency

A recurring task definition—one that is repeated at regular intervals—has a create new task dependency to itself. Task A in the figure below has the dependency onto itself. A recurring task definition does not show itself in the Following Tasks or Previous Tasks areas on their Details tab.

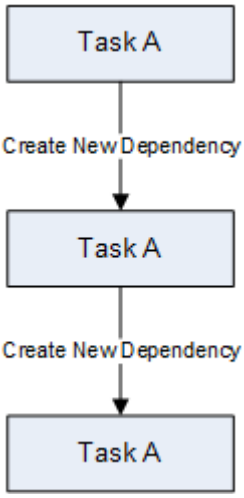

Recurring task definition

Using CRT dependencies, you can create a task definition chain that includes a repair task followed by an inspection task that is scheduled to occur at an initial interval and at a recurring interval. In this scenario, Task Definition A has a CRT dependency to Task Definition B:

1. When repair Task A is complete, inspection Task B is created.
2. According to the scheduled initial interval, Task B is completed and the first recurring instance of Task B is created.
3. According to the scheduled recurring interval, the first recurring instance of Task B is completed and the second recurring instance of Task B is created, and so on.

If you require an inspection (or other) task to be performed at one interval, then at another interval, and then on a recurring basis, you must model the inspection task with different task definitions. For the first required inspection, you have a task definition to create a one-time task. For the second required inspection and the recurring inspections, you have a second task definition to create an initial (in this case it's actually the second) and the recurring tasks. So your task definition chain, including a repair with CRT dependencies to inspections, is as follows:

1. Task Definition A (repair) is initialized creating Task A.
2. When Task A is complete, Task Definition B (inspection) is initialized, creating Task B.
3. When Task B is complete, Task Definition C (inspection) is initialized, creating Task C.
4. When Task C is complete, Task Definition C is initialized again, creating the first recurring instance of Task C and so on.

In these scenarios, because of the prerequisite and following relationships between the task definitions, only one of these task definitions is initialized at a time on the same configuration slot. If, on the other hand, you have a task chain in which two different prerequisite task definitions have CRT dependencies to the same following task (all are on the same configuration slot), both of the prerequisites can be initialized at the same time.

Related concepts

Initialization
Scheduling

Terminate Task (TERMINATE) dependency

In a terminate task dependency, when the prerequisite task is completed, the following task is terminated.

In the following diagram, Task A is a recurring inspection task that is needed because there is a potential failure in a component on an aircraft. Therefore, this inspection is performed every month to monitor the component and ensure that it is not failing.

If the inspector finds a fault, the fault is created with a corrective action consisting of the specified repair procedure. Once the repair procedure—Task B—is performed, future instances of the inspection task are unnecessary. To terminate all future instances of Task A, you create a following task dependency on the repair task (Task B) to terminate Task A.

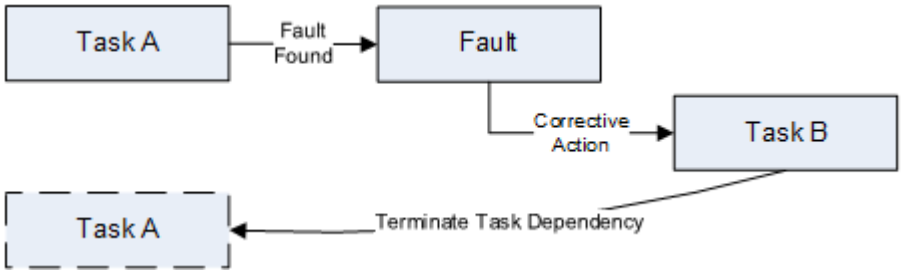

Terminate Task dependency

Task A will never be executed again on that inventory because it is no longer needed, and by terminating the task, CAMO will never initialize it again for that inventory item.

Note Terminating a task prevents it from initializing permanently. This is different from canceling a task, which indicates that the task will be scheduled again for its next due date.

Complete Task (COMPLETE) dependency

In a complete task dependency, when the prerequisite task is completed, the following task is also completed automatically.

Suppose that a service bulletin (SB) is issued, which requires you to complete either Task A or Task B. Because you do not know ahead of time which task you will complete, you must initialize both Task A and Task B in CAMO. Each of these tasks must have a complete task dependency to the other, as shown in the diagram below.

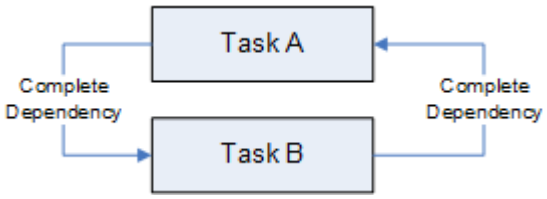

Complete Task dependency

If you complete Task A, CAMO completes Task B. In the process of completing Task B, CAMO:

- Removes unfinished labor requirements from Task B.
- Cancels any part requirements for Task B.
- Auto-completes Task B's parent task, if Task B is packaged and is the last open task.
- Executes all other task dependencies Task B has, if any.

Post-Create (POSTCRT) dependency

Post-create dependencies produce the same result as create new dependencies—upon completion of a task, an instance of another task is created—except that you create the dependency on the following task, rather than creating it on the prerequisite task.

You might use this approach when you need to create a dependency, but you don't want to create a revision of the prerequisite task definition. Since you can only add task dependencies to task definitions that are in build or revision status, post-create dependencies provide flexibility for you to do what's easiest.

In the following diagram, Task B has a post-create task dependency to Task A. When Task A is completed, Task B is initialized—an instance of the task is created.

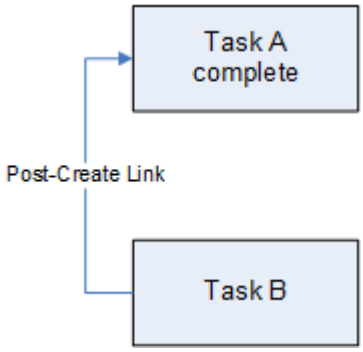

Post-Create dependency

Linked tasks

A task link is an informational relationship between two tasks used for reporting compliance, or for helping maintenance planners find opportunistic tasks to include in maintenance visits when there is extra capacity available.

Unlike with task dependencies, when you create links, there is no automatic logic wherein an action to one task affects the state of the task it's linked to. These links are for information purposes. You link from one task to another or to multiple others, but the task link relationship is visible in both or all linked task definitions.

To link configuration slot type task definitions, the task definitions must be assigned to the same assembly and belong to the same organization, or share the same non-root parent organization. You cannot link between task definitions on different assemblies, because links between definitions on different assemblies break if a sub-component is removed from its parent.

Complies link

This type of link is used to indicate that the work covered by a requirement definition is required to comply with a directive from a manufacturer, for example a service bulletin, or one from a regulatory body, such as an airworthiness directive. Links of this type are also used to generate the compliance report in CAMO.

You can create this type of link between two reference document definitions, or between a requirement definition to a reference document definition.

Opportunistic task link

This type of link indicates that the work described in the task at the end of the link—the one that you link to in CAMO—is non-mandatory work that can be done at the same time as the task from which it is linked. It is a way to let maintenance planners easily identify additional work that fits well with the work that is planned in an upcoming maintenance visit, and make optimal use of the resources—technicians, parts and tools— that are available at the maintenance location. To see and assign tasks that are opportunistically linked to tasks in a work package, planners click the View Opportunistic Tasks button on a work package details page.

This type of link can be created between two blocks, between two requirements, between a block and a requirement, and between a requirement and a block.

Other link types

The link types are configurable, so you might see other types such as Replaces, Actioned, or custom ones that your organization has added in the Ref_task_dep_action table.

For example, some organizations use a Supersedes link type between two different task definitions that represent different revisions of an airworthiness directive (AD). In CAMO, you can't

link to specific revisions of a definition created for an airworthiness directive. Since you must track compliance to specific revisions, you might create a new task definition when the revised AD is issued and link the new definition to the existing one with a Supersedes link.

Link task definitions

You can create informational relationships between task definitions by linking them. You can add complies type links to support compliance reporting, opportunistic type links to alert planners about a task they might add to a work package, or replaces type links between definitions that represent the same Structural Repair Manual (SRM) repair.

About this task

You add links to definitions after the definitions are created. To add a link, the definition must be in BUILD or REVISION status, but the task that you link to can also be in ACTV status.

To link definitions, you create the link on (from) one of them - the link is then seen on both task definitions. You can link a task definition to multiple other task definitions.

Steps

1. Go to the task definition's Details page, **Details** tab.
2. In the **Link to Tasks** area, click the ⊞ button.
3. Select a **Link Type** from the drop-down list.
4. Click the 🔍 button.
5. (Optional) Enter or select search and filter information.
6. Click **Search** and then select one task definition.

> **Note** If this is a config slot type definition, you only see other task definitions that are defined on the same assembly.

7. On the **Add Linked Task** page, click **OK**.

> **Tip** To remove a link, on the task definition Details page, in the Link to Tasks area, click the ⊟ button.

On this task definition, the Linked To Tasks area displays the task you linked to.

On the task you linked to, the Linked From Tasks area displays this task.

Scheduling

Scheduling information is used to determine how often you do a task and when a task is due. You can calculate the due date of a task by adding its start value with the scheduling interval. All blocks and requirements need scheduling (other kinds of task definitions like job cards, reference documents, and master panel cards do not require scheduling information).

Related concepts

Create New (CRT) dependency

Recurring requirements

A recurring requirement is a requirement that must be repeated periodically, such as an inspection or an overhaul. A recurring requirement has a task dependency to itself. CAMO makes a new active requirement from the same task definition once the current task is completed.

Related concepts

Threshold, Initial and Repeat intervals

Forecasting requirements

When a recurring block or requirements definition is initialized, CAMO creates the first occurrence of the actual task, and assigns it the status of ACTV (Active). Subsequent occurrences of the task have the status of FORECAST (Forecast). When the active task is completed, CAMO changes the status of the first forecasted task to ACTV.

The number of forecasted tasks CAMO creates depends on the forecast range specified in the block or requirement definition, and the scheduling interval. The forecast range is the number of days based on which you want CAMO to create forecasted tasks. If a requirement definition specifies that a task is due every 100 days and it has a forecast range of 450 days, CAMO creates six actual tasks, one active task and five forecasted tasks. This means that depending on the scheduling interval, CAMO adds one additional forecasted task beyond the forecast range. If you change the forecast range of the same requirement definition to anywhere between 300 to 399 days, CAMO will create one active task and four forecasted tasks.

An CAMO job that runs regularly creates the required number of forecasted tasks in the system; by default this job runs daily. For information about CAMO jobs, see the *CAMO Administration Guide*.

Determining the Scheduling Start Value

To calculate a requirement's deadline, CAMO must determine the scheduling start value.

For one-time tasks, and for the first occurrence of a recurring task, the scheduling start value is based on the Schedule From field of the task definition. For subsequent occurrences of recurring tasks, the scheduling start value is based on the Reschedule From field of the task definition.

There are four possible Schedule From values:

- Manufactured date: Calendar-based deadlines will be calculated from the inventory's manufactured date. Usage-based deadlines will be calculated from 0.
- Received date: Calendar-based deadlines will be calculated from the inventory's received date. For usage-based deadlines, CAMO will look through the inventory's usage history and determine the usage on that received date; the deadline will then be calculated from that value.
- Effective date: Calendar-based deadlines will be calculated from the inventory's effective date. For usage-based deadlines, CAMO will look through the inventory's usage history and determine the usage on that effective date; the deadline will then be calculated from that value.
- Maintenance program activation date: This option is only available for requirement definitions that are assigned to a maintenance program.Calendar-based deadlines will be calculated from the maintenance program's activation date. For usage-based deadlines, CAMO will look through the inventory's usage history and determine the usage on the maintenance program's activation date; the deadline will then be calculated from that value.

The following tables provide a detailed description of how the scheduling start values are calculated based on the various Schedule From options.

Schedule From: Manufactured date

Scenario	Interval based on	Scheduling start value
The inventory has a manufactured date.	Calendar	Manufactured date
	Usage	0
The inventory does not have a manufactured date.	Calendar	January 1, 1950
	Usage	0

Schedule From: Received date

Scenario	Interval based on	Scheduling start value
The inventory has a received date.	Calendar	Received date
	Usage	For aircraft and assemblies, the value is set to the usage value at the received date. For dates in the past, usage value is calculated from historical flights and usage records. For dates in the future, the forecast model and information about planned flights are used. For tracked components, this value is set to 0. You must update the value manually.
The inventory does not have a received date.	Calendar	January 1, 1950
	Usage	0

Schedule From: Effective date

Scenario	Is "Use Manufactured Date if Later" Option Enabled?	Interval based on	Scheduling start value
The effective date is not specified and the task definition does not have On-Condition enabled.	TRUE/FALSE	Calendar	January 1, 1950
		Usage	0
The effective date is not specified, and the task definition has On-Condition enabled.	TRUE/FALSE	Calendar	Date when the user creates the task, or date the user selects when creating the task.
		Usage	Usage at the date the user creates the task, or the usage at the date the user selects when creating the task.

Scenario	Is "Use Manufactured Date if Later" Option Enabled?	Interval based on	Scheduling start value
The effective date is specified	FALSE	Calendar	Effective date
		Usage	For aircraft and assemblies, the value is set to the usage value at the effective date. For dates in the past, usage value is calculated from historical flights and usage records. For dates in the future, the forecast model is used.
The effective date is specified. It is later than the inventory's manufactured date.	TRUE	Calendar	Effective date
		Usage	For aircraft and assemblies, the value is set to the usage value at the effective date. For dates in the past, usage value is calculated from historical flights and usage records. For dates in the future, the forecast model is used.
The effective date is specified. It is before or the same as the inventory's manufactured date.	TRUE	Calendar	Manufactured date
		Usage	0

Add missing manufactured date or received date

About this task

When actual tasks are created, the records for some of the applicable inventory might be missing the manufactured and/or received date. If this is the case, CAMO will initialize calendar-based deadlines that have Schedule From manufacture date or Schedule From received date from a default scheduling start value; this default value is very old and will cause the requirement's deadline to become immediately overdue. You will need to manually edit the deadline start values in order to correct this.

Steps

1. Navigate to **Inventory Details** page of the required inventory.

2. Click **Edit Inventory**.
3. On the **Edit Inventory** page, edit the following fields:
   - **Manufactured Date**: The date that the inventory was manufactured.
   - **Received Date**: The date that the inventory was received.
4. Click **Finish**.
5. Add notes as required in the Notes field and click **OK**.

Add missing effective date or initial usage value

About this task

If a requirement has Schedule From set to effective date, but no Effective From Date is provided, CAMO will initialize the task from a default scheduling start value; this default value is very old and will cause the requirement's deadline to become immediately overdue. For usage-based scheduling, Maintenix will initialize the task from 0 usage. If you want to set the initial date or usage, you can use the Create Task and Set Deadlines feature. Or, you can manually edit the deadline start values in order to correct this.

Steps

1. Navigate to the **Task Details** page of the required task.
2. Click the **Scheduling** tab.
3. Click **Edit Deadline Start Values** and edit the required information
4. Click **OK**.

Reschedule From values

The first occurrence of a recurring task is scheduled based on the Schedule From values. Subsequent occurrences of the task are scheduled based on the Reschedule From values, which can be the following:

- EXECUTE: Calendar-based deadlines will be calculated from the task's completion date.
- WPSTART: Calendar-based deadlines will be calculated from the work package's start date.
- WPEND: Calendar-based deadlines will be calculated from the work package's completion date. If you extend a usage-based requirement that was scheduled from WPEND and you complete the task within the extended window, the next task is scheduled from the LASTDUE date.

Scheduling interval

The scheduling interval is the amount of time or inventory usage that can elapse before a task is due. The start date plus the scheduling interval determines the task deadline.

You can create scheduling interval rules based on different parameters including:

- Usage - calendar hours, days, weeks, months, years, last day of month.
- Usage - cycles
- Usage - flying hours
- Measurements

You also have options to create special rules for specific parts or tail numbers. See the following topics for more information. See related topics for more information on usage parameters.

Related concepts

Usage parameters and usage definitions

Threshold, Initial and Repeat intervals

Non-recurring tasks have a Threshold interval. Recurring tasks have an initial interval and a repeat interval. The initial interval dictates when the first occurrence of a task is due. The repeat interval dictates when subsequent occurrences are due.

Related concepts

Recurring requirements

Schedule to Plan

A recurring requirement can be scheduled either at one interval from the due date of the previous occurrence of the requirement—which is called scheduled to plan—or at one interval from the real date when the previous occurrence of the requirement is completed— which is called scheduled to actual.

The schedule to plan concept includes a lower bound and an upper bound that are called **Schedule to Plan: Low** and **Schedule to Plan: High** in CAMO. If a task is completed within the window defined by the lower and upper bound, it is within its planned schedule, and the next occurrence of the task is scheduled from the due date for the occurrence that was just completed.

The diagram below shows two scenarios using schedule to plan, both tasks being completed within the schedule to plan window. The deadline of the next occurrence is the same in both scenarios, because it is scheduled from the previous occurrence's due date using the scheduling interval of the task definition; only the real intervals are different.

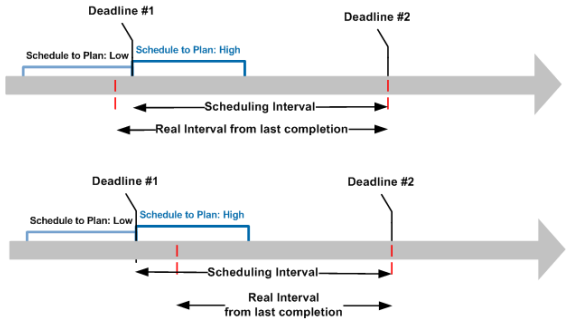

Schedule to plan scenarios

If the task is completed outside of the scheduled to plan window, it is treated automatically as a task that is scheduled to actual. The diagram below shows two scenarios where the task is completed outside of its schedule to plan window. Note that the deadlines of the next occurrence are different in each scenario but the interval is the same. By default in CAMO, the schedule to plan lower and upper bounds are set to zero (0) in task definitions; when both are set to zero, the task is always scheduled from the actual date, not the planned date.

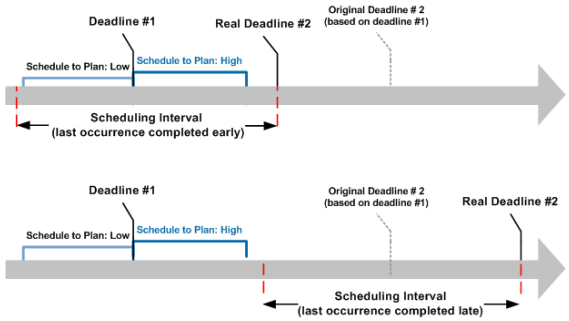

Task completed outside of scheduled plan window

Month and year intervals

Recurring tasks can have a scheduling rule with repeat intervals of months or years.

CAMO calculates the deadline for the next occurrence of a task with repeat interval of months (CMON) as follows:

- If the previous task is completed on the last day of a month, the next due date is the specified interval of months later, on last day of the month. Given the uneven number of days in calendar months, the number of days that pass in the interval of months before the next task is due, varies.
- If the previous task is completed on any other day of the month (except January 29 and 30), the next due date is the specified interval of months later, on the same day of the month.
- If the previous task is completed on January 29 or on January 30 and the interval is one month, the next due date is February 28, or February 29 if it's a leap year. However, if the interval is

more than one month, then the next occurrence is the specified interval of months later, on the same day of the month.

The following examples show previous task completion dates, monthly repeat intervals, and the resulting next due date for tasks.

Completion date of the previous task	Repeat interval	Next due date
September 30	6 months	March 31
March 31	6 months	Sept 30
November 30	3 months	February 28
July 15	4 months	November 15
January 29	1 month	February 28
January 29	2 months	March 29
January 30	1 month	February 28
January 31	1 month	February 29 (leap year)

For tasks that have a deadline repeat interval specified in calendar years (CYR), CAMO considers the months with different number of days, and the leap years. The following table provides examples of how CAMO schedules such tasks.

Completion date of the previous task	Repeat interval	Next due date
February 28, 2015	1 year	February 29, 2016 (leap year)
February 29, 2016	1 year	February 28, 2017
March 15, 2015	1 year	March 15, 2016
January 1, 2016	10 years	January 1, 2026

Measurement-specific scheduling intervals

Measurement-specific scheduling rules let you define multiple different scheduling intervals, and then specify which scheduling interval to use based on a measurement recorded during task execution. In other words, when this requirement is performed the technician will take a measurement and the value of that measurement will determine how long until the next iteration of this requirement is due.

You can setup a measurement-specific scheduling rule where the interval is 0. This means that if the measurement falls within a particular range, the next iteration of the requirement will become immediately overdue. You would do this to indicate that a particular measurement value is unacceptable. Whatever problem caused this extreme measurement value will need to be fixed and a new measurement taken, in order to stop the interval from being 0.

You must also indicate the extreme measurement value at which this requirement is no longer required. For example, if the tire pressure is over 100 PSI, cancel this particular requirement. This is used to indicate a measurement so good that the requirement is no longer needed. If this requirement should never be canceled, then specify a measurement range so extreme that maintenance execution will never record this value.

Measurement-specific scheduling intervals only apply to recurring requirement definitions. They do not apply to one-time requirements, nor do they apply to blocks of any kind.

For example, here is an on-condition requirement (a crack inspection) that would be initiated when a small crack is found. Every time this requirement is performed, the maintenance technician will be asked to measure the crack length.

- If the crack length is greater than 10cm, the next occurrence is due in 0 hours (ie. The next requirement will become immediately overdue).
- If the crack length is greater than 5cm but smaller than 10cm, the next occurrence is due in 100 hours.
- If the crack length is greater than 0cm but smaller than 5cm, the next occurrence is due in 500 hours.
- If the crack length is 0cm (no crack), then cancel this requirement.

  In this example, the scheduling interval becomes smaller as the measurement increases. You can also use decreasing measurement values to change the scheduling interval, for example, you could specify that the scheduling interval becomes shorter as the tire thread depth measurement decreases.

Note

Measurement-specific scheduling rules do not work with the CAMO forecasting capability.

When you create a measurement specific rule, you select the following information:

- The scheduling interval parameter to use on this requirement.
- The measurement parameter which will be collected during execution.
- Whether you want to create increasing scheduling intervals as the measurement value increases, or increasing scheduling intervals as the measurement value decreases. For example, when measuring the length of a crack, you would set different scheduling intervals

as the measurement value increase, whereas when measuring tire tread depth, you would set different scheduling intervals as the measurement value decreases.

- The measurement value at which the requirement will be canceled.

Part-specific scheduling interval

You add part-specific scheduling rules to make exceptions to the general scheduling rule for specific part numbers. For example, if there are three different parts that can be installed on a configuration slot, and one of these parts requires less frequent maintenance than the others, you create a part-specific scheduling rule for that part number.

Part-specific scheduling rules can use only the parameters that are already set for the general scheduling rules. For example, if the general scheduling rules do not include cycles, the part-specific rules cannot either. In part-specific scheduling rules, you can set the values for all fields—intervals, notification, deviation, schedule to plan low and high—for any of the parameters that are used in general scheduling rules.

Tail number-specific scheduling interval

You add tail number-specific scheduling rules to make exceptions to the general scheduling rules for specific aircraft tail numbers.

Tail number-scheduling intervals can only use the parameters that are already set for the general scheduling rules of the task definition. For example, if the general scheduling rules do not include cycles, the tail number-specific rules cannot either. In tail number-specific scheduling rules, you can set the values for all fields—intervals, notification, deviation, schedule to plan low and high—for any of the parameters that are used in general scheduling rules.

Manual scheduling

The manual scheduling feature is available for block, requirement, and reference document definitions. It allows users to manually edit the scheduling interval of actual tasks that are based on the definition. Users must have the correct permissions to be able to edit the scheduling interval on the actual tasks.

The following table explains the way in which CAMO baseline synchronization updates actual tasks when you activate a new revision of the task definition involving manual scheduling.

Making revisions of task definitions with Manual Scheduling

Manual Scheduling option		Effect on actual tasks based on definition
In Previous Revision	In newly activated revision	
Disabled	Enabled	Baseline synchronization applies all changes you made to the task definition on all existing actual tasks. Authorized users are able to edit the scheduling interval on all actual tasks based on the task definition.
Enabled	Enabled	For actual tasks that existed before you activated the new revision, including forecasted tasks, baseline synchronization updates all information except any changes you made to the task definition scheduling rules. All new actual tasks are created based on the new revision of the task definition.
Enabled	Disabled	Baseline synchronization updates all information on the existing actual tasks. Users are no longer able to manually edit the scheduling interval on the actual tasks.

Maintenix uses two manual scheduling strategies: the standard Allow Manual Scheduling and the improved Enable Manual Scheduling.

The Allow Manual Scheduling implementation sometimes has issues related to over-flown deadlines, compliance, and general loss of scheduling.

Enable Manual Scheduling is used on an as-needed-for-task basis. In the Enable Manual Scheduling strategy, there are permissions to add, remove, and edit ad hoc deadlines. Also, there is an additional permission called ACTION_EDIT_MANUAL_INTERVAL that controls whether the ad hoc permissions you have are unlocked for baseline tasks. It's like an overlay permission.

List of permissions:

1. ACTION_ADD_TASK_DEADLINE
2. ACTION_EDIT_MANUAL_INTERVAL
3. ACTION_EDIT_TASK_INTERVAL
4. ACTION_ENABLE_MANUAL_SCHEDULING
5. ACTION_REMOVE_TASK_DEADLINE

Hard and soft deadlines, deviation, and notification

In addition to the scheduling start value and the interval, you can specify the following in task definitions:

- Whether the deadline is a soft or hard deadline.
- How much deviation from a deadline is allowed before a task is considered overdue.
- How long in advance of the deadline should CAMO provide notification by changing the schedule priority on the task from LOW to HIGH.

The following figure illustrates the concepts involved in scheduling tasks and task deadlines.

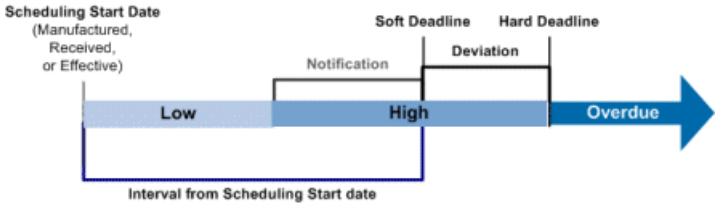

Scheduling tasks and task deadlines

A hard deadline is a deadline that cannot be exceeded; if the task is not completed by its hard deadline, CAMO considers the task as overdue. A soft deadline means that the completion of the task is allowed to exceed its deadline without becoming overdue. All deadlines calculated by CAMO—based on the scheduling start value, or the previous occurrence of the tasks for recurring tasks, and the interval specified in task definitions—are hard deadlines, unless a deviation is specified in the task definition, or the Soft Deadline option is enabled in the task definition.

By selecting the Soft Deadline option in the task definition, you specify that the deadline is always a soft deadline, meaning that the tasks never become overdue in CAMO. Use this to represent tasks for which there is no execution interval or frequency mandated by a regulatory body.

The notification interval determines when CAMO notifies users about the approaching deadline for a task —the deadline as set in the task definition, not the hard deadline at the end of the deviation. At the notification point, the Schedule Priority of a task switches from LOW to HIGH. The notification interval is measured in the same units as the scheduling interval, such as calendar days, hours, cycles or number of landings. There is a notification interval for each deadline specified in the task definitions. Notification is not set for tasks that always have soft deadlines.

Overdue tasks are those whose driving deadline has been exceeded. A task whose deadline is based on a calendar parameter is overdue when the current date is later than the task due date, plus the deadline deviation when one is specified. A task whose deadline is based on a usage parameter is overdue when the inventory's current accrued usage exceeds the usage value at the driving deadline, plus the deadline deviation when one is specified.

Maintenance programs for aircraft and assemblies

A maintenance program is a collection of requirements and reference documents for a particular aircraft or assembly such as an engine or APU. The same maintenance program can be used by one or more operators. They are not intended for use with individual, trackable components (TRK components), which can be moved across different assemblies and are not directly tied to a specific operator when loose.

Note Assigning a Maintenance Program to requirements (REQs) for a TRK configuration slot is not recommended since TRK components do not inherently have an operator assignment. This will introduce complexities that can affect maintenance tracking and task applicability.

When a maintenance program is applied to an operator, it is applied to all of the operator's applicable aircraft and assemblies.

Maintenance programs are version-controlled in the same way as task definitions. If the program is assigned to only one operator, the revision status is straight forward. You have one active revision, one in revision status, and there can be multiple superseded revisions.

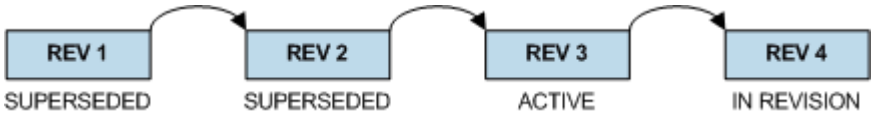

Maintenance Program Revisions

The typical life cycle for a maintenance program is as follows:

- Create the maintenance program for an operator.
- Assign requirements to the maintenance program.
- Lock the maintenance program and request approval.
- Activate the maintenance program.
- Revise the maintenance program for an operator then lock, get approval, and activate.
- For more urgently required changes, issue a temporary revision of a requirement to an active program.

Creating maintenance programs

When you create a maintenance program it's in Build status and you can assign requirement definitions and reference document definitions to the program. REQ and REF are the only classes of task definitions that you can assign to maintenance programs. When you assign a definition to a maintenance program, the active revision of the definition is what's assigned. (You can also add definitions that are still in BUILD status.)

A requirement can be assigned to only one maintenance program.

You can use group codes to bundle several requirements and related reference documents which serve a common purpose such as responding to a regulatory obligation. A maintenance program can have more than one group code. You can label each requirement and reference document with a group code as you add it to a maintenance program and afterwards, filter by group code on the Maintenance Program page, Requirements tab.

You can move individual requirements, and related reference documents, in and out of maintenance programs or groups as you revise a maintenance program.

From the Maintenance Program page, Requirements tab, you can see which revision of a requirement is assigned to the program. You can filter the list of requirements and reference documents by group code and configuration slot, and you can choose to show only definitions that have a revision in REVISION status, or definitions that are applicable to the assembly.

Locking and printing the program

By default, maintenance programs in build or revision status are unlocked. You can edit the program, assign or assign requirements or make other changes, and requirements are automatically updated to their latest revisions.

Locking a maintenance program prevents manual changes and automatic updates.

While building or revising a maintenance program, you can lock and unlock it as required. The lock history is displayed on the Maintenance Program Details page, Details tab.

After you are done building or revising a maintenance program, you lock it to prevent any changes to the program while the maintenance program is being validated and approved by the regulatory authorities. To ensure that the program isn't altered, leave it locked until it's activated. If you unlock an approved program prior to activating it, the assigned task definitions will be updated to their latest revision, which might invalidate the approval.

When you are ready to send the maintenance program for approval, or as you develop the program, you can print the following reports:

- Maintenance Program Report: lists all the requirements in the program and is available for maintenance programs in any status.
- Maintenance Program Impact Report: lists all active tasks whose deadlines will change if the maintenance program was activated. The report shows the current task deadlines and the new deadlines that would be in effect. This report is available for maintenance programs in build or revision status.
- Maintenance Program Differences Report: lists the differences between one revision and another revision of the same maintenance program.

Activating maintenance programs

Activating a maintenance program triggers baseline synchronization and initializes tasks for the maintenance program. The tasks that are created are based on the revisions of the task

definitions that were active when the maintenance program was locked. (If the program wasn't locked prior to requesting approval, then tasks are based on the revisions of task definitions that were active when the maintenance program was activated.) If new revisions of the task definitions are later activated, they are not updated in the active maintenance program until you revise the maintenance program.

When the program is active, you can't make any changes to it, except to issue temporary revisions of requirements.

When the maintenance program requirements are initialized, they are only initialized for the applicable aircraft. In the following diagram, a maintenance program is assigned to an operator who owns Aircraft A and Aircraft B. REQ1 is applicable to both aircraft, but REQ4 is applicable to neither aircraft. CAMO initializes the tasks based on their applicability of each aircraft.

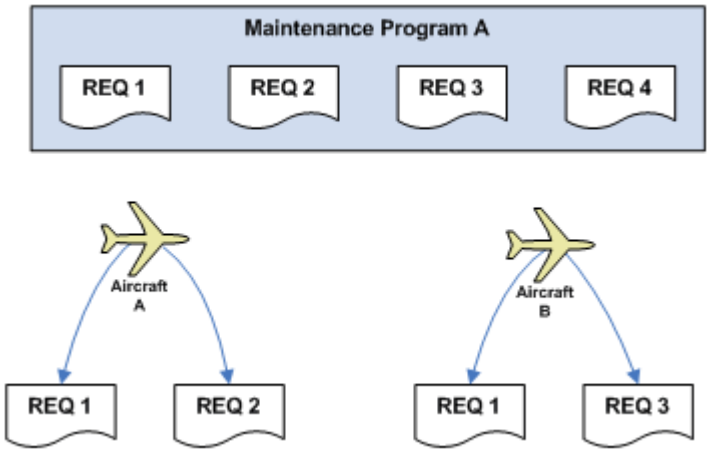

Aircraft requirements in a Maintenance Program

When you activate a revision, CAMO creates another revision with the REVISION status. This is the revision you will use when you need to modify the maintenance program.

Multiple operators sharing the same maintenance program

If your instance of CAMO includes multiple operators, the same maintenance program can be used by multiple operators that have the same type of aircraft, but slightly different maintenance needs or processes. When you create a maintenance program, you can only select one operator, but after the program is activated for one operator and there is now another revision in REVISION status, you can assign the new revision to the different operator.

When the revision that's assigned to a different operator is activated, the status of an earlier revision assigned to another operator shows as superseded - but it isn't necessarily. The latest revision, that isn't in REVISION status, for any one operator is active for that operator. The maintenance program revision history shows both the maintenance program revisions and the revisions for each operator. The following figure shows the history for a maintenance program

with different revisions assigned to two different operators. (The revision record you are currently viewing is listed in bold, red font).

Revision History

Revision	External Revision	Operator	Operator Revision
Rev 4		OT-OTA / OT / OTA (On Time Airlines)	Rev 2
Rev 3		EA-ECA / EA / ECA (EconoAir)	Rev 2
Rev 2		EA-ECA / EA / ECA (EconoAir)	Rev 1
Rev 1		OT-OTA / OT / OTA (On Time Airlines)	Rev 1

Maintenance program revisions for multiple operators

- Rev 4 is in revision
- Rev 3 is activated
- Revs 1 and 2 are superseded

Although the revision status of Rev 1 is superseded, tasks for OTA are initialized based on the definitions in Rev 1. Tasks for ECA are initialized based on the definitions in Rev 3.

The tasks created for the applicable inventory of one operator are based on the revisions of the task definitions that are in the latest (not including the revision that's in REVISION) maintenance program revision for that operator. Changes to one operator's revision don't affect another operator's revision.

Revising maintenance programs

When you retrieve and view the task definitions in the REVISION status revision of a maintenance program, the task definitions listed are the active revisions. With the updated requirements as a starting point, you can then add new requirements, unassign requirements, or create revisions of task definitions in the program and assign the revised definitions to the program.

If there are multiple operators using the same maintenance program, you must assign the maintenance program revision to the operator whose program you want to update.

When you are working with an in REVISION maintenance program, an Unassign Requirement button is available. However, if the requirement you want to unassign is used in another operator's latest revision of the maintenance program, you can't unassign the requirement directly. This restriction is also true if the requirement was temporarily assigned to another operator's revision of the maintenance program. To unassign a requirement that is in use by one or more other operator revisions of the maintenance program, you create a revision of the requirement, add an applicability rule that specifies which operators the requirement applies to, and activate the requirement. The requirement is then visible in the maintenance programs of all operators, but it is applicable or not – and tasks are created in the operator's revision of the maintenance program or not – according to the rule you created.

When you're done revising a maintenance program, you lock the program, get it approved, then activate it. Baseline synchronization initializes tasks for the program based on the task definitions that are in this latest revision.

When working with a revision status maintenance program (that's unlocked), if you want to delete all the changes you've made, you can use the Revert to Previous Revision button.

Temporary revisions to active maintenance programs

Revising a maintenance program is typically a lengthy process. If you need a change to take effect before the revised maintenance program is approved and activated, you can issue a temporary revision of a requirement to one or more operator revisions of an active, approved maintenance program. To issue a temporary revision of a requirement to an active maintenance program, the revised requirement must already be assigned, unassigned or revised in the REVISION version of the maintenance program. In other words, you can't make a temporary change that you're not planning to make in the next revision of the maintenance program. You might issue temporary revisions of requirements for the following reasons:

Reasons for issuing temporary revisions of requirements

Reason for revision	Result of issuing temporary revision
A brand new requirement definition	New tasks based on the requirement are added to the maintenance program.
A newer revision of an existing requirement definition that is already in the maintenance program	Existing tasks are updated to the newer revision of the requirement, except for tasks in a work package that's committed or in work.
A requirement definition was made obsolete	The requirement is marked as obsolete in the maintenance program. Existing tasks based on the now obsolete requirement are terminated, except for tasks in a work package that's committed or in work.

Maintenance program revision numbers

Maintenance programs have a revision number, an operator revision number, and an external revision number. In the context of a maintenance program, you can also see which revision of a task definition is currently assigned and the number of times a definition has been issued to a program for an operator.

The following numbers are all displayed on the Maintenance Program Details page, in the Details area.

Revision number

The Revision number is the auto-incrementing number assigned to the maintenance program each time a new revision is created, regardless of the operator to which the revision is associated. If a maintenance program has been revised ten times, sometimes for operator A and sometimes for Operator B, the latest revision number is 10.

Operator revision number

The Operator revision number is the auto-incrementing number assigned to the maintenance program each time a revision is made for a specific operator. If a maintenance program has been revised ten times, twice for Operator A and eight times for Operator B, the Operator Revision number for Operator A is 2, whereas for Operator B, it is 8.

External revision number

The External revision number is an optional and customizable revision number that your organization can use however it sees fit. For example, if different operators prefer different numbering schemes, you can use their preferred scheme for the external revision number of maintenance revisions that apply to them. Or, you might use this field to indicate that a particular revision has been submitted for external approval.

On the Requirements tab of a maintenance program, each requirement and reference document has a revision number and an issue number.

Revision number (requirement)

The Revision number of a requirement is the auto-incrementing number assigned by CAMO to each revision of the requirement or reference document definition created, regardless of which maintenance program or operator it is assigned to. The Requirements tab on the Maintenance Program Details page displays the revision number currently assigned to each task definition included in the maintenance program.

Issue number

The issue number indicates how many times a different revision of a task definition is (or will be) activated in a maintenance program for an operator's fleet. The definition revision number might change multiple times while a maintenance program is revised, but when the program is activated, only the last revision of a definition is included in the active program. The issue number auto-increments once during the build when you assign a definition to a maintenance program and afterwards once per maintenance program revision if the definition revision number is different than in the prior active revision of the program for the same operator.

When multiple operators share a maintenance program, the issue numbers can be different for the different operators. If one operator is on revision 2 of a maintenance program and then revision 3 of the maintenance program is assigned to a different operator, all the definitions in the new operator's maintenance program have an issue number of 1.

While a maintenance program is in Build or Revision status, you can change the number that is assigned as the issue number for any requirement or reference document that is included in the maintenance program, and that is active.

The figure below shows how task definition revision and issue numbers are incremented in a multiple operator maintenance program. The colored squares show when there's a change to the numbers. You can see in Revision 5 for Operator A that REQ Rev 3 is never initialized on any aircraft because Rev 4 is created and activated before Revision 5 of the maintenance program is activated.

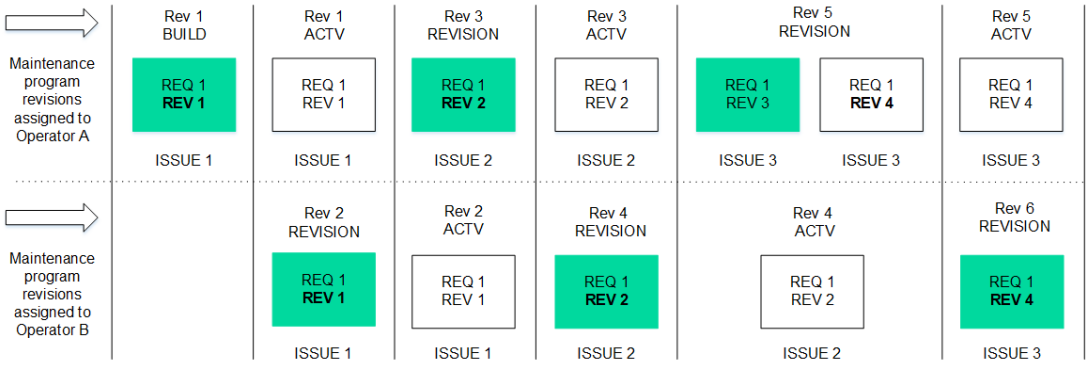

Revision numbers and issue numbers in a multi-operator maintenance program

Create a maintenance program

You create maintenance programs for aircraft or other assemblies.

About this task

When you create the program you select only one operator. If you are trying to assign another operator to the same program, you work with a revision of the maintenance program.

Steps

1. On the **Engineer - To Do List** page, click the **Assembly List** tab.
2. In the **Assembly** column, click an assembly link.
3. On the **Assembly Details** page, click the **Maintenance Programs** tab.
4. Click **Create Maintenance Program**.
5. On the **Create Maintenance Program** page, provide the required information. Note the following:
   - **Code**: Type the code for the maintenance program. This code must be unique per assembly.
   - **Name**: Type the name for the maintenance program.
   - **Operator**: Select the operator.

- **External Revision Number**: Different organizations use this optional field to enter relevant information. For example, you might use this field to indicate that a particular revision has been submitted for external approval.
- **Description**: Optional field.

6. Click **OK**.

The default status for the new maintenance program is Build. You can now modify its details and assign requirement and reference document definitions to the maintenance program.

Related tasks

Assign another operator to a maintenance program

Assign requirements to a maintenance program

When a maintenance program is in BUILD or REVISION status, you can assign requirement (REQ) and reference document (REF) class task definitions to the program. When you assign REQS and REFS to a maintenance program, it is the active revision of each definition that is assigned.

About this task

You are not prevented from assigning requirements and reference documents in BUILD status, but you can't edit the issue numbers or the reason and notes for definitions in this status.

Steps

1. Go to the **Assembly Details** page, **Maintenance Programs** tab.
2. In the list of Maintenance Programs, click a maintenance program link.
3. On the **Maintenance Program Details** page, click the **Requirements** tab.
4. Click **Assign Requirement**.
5. On the **Assign Requirement** page, provide the required information. Note the following:
   - **Group Code**: An optional, free-text label that you can use to identify requirements that serve a common purpose such as responding to a regulatory obligation. Group code is a filter option on the Maintenance Program page, Requirements tab.
   - **Reason**: You have the option to select the reason for assigning the requirements.
   - **Note**: Optional. The information you enter here can later be viewed on the Maintenance Program Details page, Requirements tab, Details column for the requirement.
   - **Requirement Code**: Type the code of the requirement to assign and press Enter, or click to search for the code.
6. Select the check box next to the requirement you want to add to the maintenance program.
7. Click **Assign Requirement**.

Tip If the requirements are not visible on the Requirements tab, in the Filter Options, click **Retrieve**.

View a maintenance program

You can see all the requirements and reference documents in a maintenance program or filter the list by group code, configuration slot, definitions that have a revision in REVISION status, and definitions that are applicable to the assembly.

Steps

1. Go to the **Assembly Details** page, **Maintenance Programs** tab.
2. (Optional) Enter or select **Filter Options**.
3. Click **Retrieve**.

Change group code on a REQ or REF

Steps

1. Go to the **Maintenance Program Details** page, **Requirements** tab.
2. Select the check box for a requirement or reference document.
3. Click **Edit Reason and Notes**.
4. Edit the **Group Code** and click **OK**.

Lock a maintenance program

To prevent maintenance programs in build or revision status from being manually changed or having requirements and reference documents automatically updated to their latest revisions, you lock the program. When you are ready to get the program approved, you lock it to prevent changes while the program is being validated by authorities.

About this task

Note When a locked maintenance program is approved, you should activate the program without unlocking it. If you unlock the program the assigned requirements and reference documents will be updated to their latest revisions which can invalidate the approval.

Steps

1. Go to the **Assembly Details** page, **Maintenance Programs** tab, and click a maintenance program link.

2. On the **Maintenance Program Details** page, click **Lock Maintenance Program**.
3. On the **Confirmation Required** page, click **Yes**.

> **Note** After you lock a maintenance program, you will see an **Unlock Maintenance Program** button on the Maintenance Program Details page. To unlock the program, click this button and confirm by clicking **Yes**.

Activate a maintenance program

After you receive approval for a maintenance program from the regulatory authorities, you activate it in CAMO. This changes the program status to Activated and triggers baseline synchronization to initialize tasks based on the requirements in the program.

About this task

If the maintenance program is locked, leave it locked when you activate it. You can activate an unlocked program, but typically, approved programs are locked.

Steps

1. Go to the **Assembly Details** page, **Maintenance Programs** tab, and click a maintenance program link.
2. On the **Maintenance Program Details** page, click **Activate Maintenance Program**.
3. On the **Activate Maintenance Program** page, provide the following information:
   - **Description**: Type the activation description.
   - **Activate Reference**: Type the activation reference.
   - **External Revision Number**: Type the external revision number.
4. Click **OK**.

The status of the revision is now ACTV. A new maintenance program revision with the status of REVISION is automatically created for the same operator (but you can assign a different operator to the revision).

Revise a maintenance program

After you activate a maintenance program that was in Build or Revision status, a revision of the program is automatically created for the same operator. To revise a maintenance program you work with the REVISION status revision of the program.

Steps

1. Go to the **Assembly Details** page, **Maintenance Programs** tab, and click a maintenance program.
2. Verify that the **Status** for the record you are viewing is REVISION.

> **Tip** If you are not viewing the REVISION status revision, click the **Details** tab. In the Revision History area, click the revision with the highest number.

3. (Optional) To change the operator, in the **Details** area, click the edit button. Select an operator from the drop-down list and click **OK**.
4. Click the **Requirements** tab to work with requirements and reference documents.

Assign another operator to a maintenance program

The same maintenance program can be used by multiple operators. To assign a maintenance program to another operator, you edit the REVISION status revision of the maintenance program.

About this task

When CAMO creates the REVISION status revision of a maintenance program it automatically assigns the same operator as the revision that was last activated. You will change this with following steps:

Steps

1. Go to the **Assembly Details** page, **Maintenance Programs** tab, and click a maintenance program.
2. Verify that the **Status** for the record you are viewing is REVISION.

> **Tip** If you are not viewing the latest revision (with the REVISION status), click the **Details** tab. Then, in the Revision History area, click the revision with the highest number.

3. In the **Details** area, click the edit button.
4. Click the **Operator** down arrow, select the operator from the list, and click **OK**.
   You can now go to the Requirements tab to work with requirements and reference documents.

Unassign requirements from maintenance programs

When a maintenance program is in build or revision status, you can unassign requirements from the program.

About this task

> **Important** Do not follow these steps when you want to unassign a requirement for a maintenance program that has been activated for more than one operator. See related topic.

Steps

1. On the **Maintenance Program Details** page, click the **Requirements** tab.
2. In the **Filter Options** area, enter the criteria for the requirements to be retrieved.
3. Click **Retrieve**.
4. Select the check box for the requirement you want to remove, and click **Unassign Requirement**.
5. On the **Unassign Requirement** page, provide the required information.
6. Click **OK**.

Unassigned requirements are displayed with a strikethrough on the Maintenance Program Details page, Requirements tab.

Related tasks

Activate a maintenance program

Unassign requirements from maintenance programs with multiple operators

Unassign requirements from maintenance programs with multiple operators

To unassign a requirement that is used in other operator revisions of a maintenance program, you create a revision of the requirement, add an operator-specific task applicability rule to the requirement, and activate it. Do not use the Unassign Requirement button because doing this cancels tasks in the other operator's revisions of the maintenance program.

Prerequisite

You can only unassign requirements from the revision of the maintenance program that is in REVISION status.

About this task

> **Important** Do not use the **Unassign Requirement** button in this scenario.

These steps start with getting the code or codes of the other operators in the maintenance program that are still using the requirement.

Steps

1. To get the operator code, on the **Maintenance Program Details** page, **Revision History** area, **Operator** column, click an operator link.
2. On the **Organization** page, in the **Identification** area, copy or note the **Code**. Repeat if there is more than one operator that will continue to use the requirement.
3. On the **Maintenance Program Details** page, **Requirements** tab, enter or select **Filter Options** and click **Retrieve**.
4. Select a requirement to revise and click **Create Revision**.

5. Enter the required information and click **OK**.
6. On the **Requirement Details** page, **Applicability** tab, in the **Identification** area, click the edit button.
7. In the **Applicability** area, **Applicability Rule** box, enter the task applicability rule. Use the following syntax:`[Aircraft Operator]='Operator Code'`
   `For example: [Aircraft Operator]='OT-OTA'`
8. (Optional) Click **Verify Applicability Rule** and click **OK**.
9. Click **OK**.
10. Click **Activate Requirement**, enter requested information, and click **OK**.
11. On the **Requirement Details** page, **Applicability** tab, click **Close**.
    On the **Maintenance Program Details** page, **Requirements** tab, the **Applicable** check box is cleared for the requirement you just revised.

After you activate this revision of the maintenance program, tasks are not created in this revision for the requirement you revised.

Related tasks

Activate a maintenance program

Issue temporary revisions of requirements

Issuing a temporary revision means to apply the newly activated revision of a requirement definition to an approved and active maintenance program, without applying the latest active revision of all other requirement definitions that are in the maintenance program.

About this task

To issue a temporary revision of a requirement to an active maintenance program, the revised requirement must already be assigned, unassigned or revised in the REVISION version of the maintenance program.

A temporary revision can be issued for a brand new requirement definition, for a newer revision of an existing requirement definition that is already in the maintenance program, or for a requirement definition that has been made obsolete.

In the case of a new revision of an existing requirement definition, all existing tasks are updated to the newer revision, except those that are in a committed or in-work work package.

In the case of an obsolete requirement definition, issuing a temporary revision marks that requirement as obsolete in the maintenance program, preventing its execution immediately rather than waiting for the maintenance program that is in revision to be approved and activated. Any existing task based on the now obsolete requirement is terminated, provided the task is not included in a work package that is committed or in work.

Steps

1. On your to-do list, click **Requirement Search**.
2. On the **Requirement Search** page, provide the required information.
3. Click **Search**.
4. Click the requirement link.
5. On the **Requirement Details** page, click **Issue Temporary Revision**.
6. On the **Issue Temporary Revision** page, select the check boxes of the operators to which you want to assign the temporary revision.
7. Click **OK**.

The revision number you just assigned is now displayed on the Maintenance Program Details page, Requirements tab, in the Temp column for the requirement or reference document.

Print maintenance program reports

About this task

You can generate the following reports that give detailed information about a maintenance program:

- The Maintenance Program Report displays all requirements in the maintenance program. Available for maintenance program revisions in any status.
- The Maintenance Program Differences Report displays all requirements that were added, removed, or revised between two maintenance program revisions.
-
- The Maintenance Program Impact Report displays all active tasks that would be affected if the maintenance program was activated. The impact report displays requirements on the selected operator's aircraft. Available only for maintenance program revisions in REVISION status.

Steps

1. On a **Maintenance Program Details** page, click one of the following buttons:
   - **Print Maintenance Program**, then enter or select parameters.
   - **Print Maintenance Program Differences**, then enter or select parameters. For the **Comp Carrier Rev** parameter, enter the revision number you want to compare with revision you are currently viewing.
   - **Print Impact Report**, then enter or select parameters.
2. Click **Generate Report**.

Interactive Electronic Technical Manuals (IETMs)

Technicians use electronic documents with information on how to perform maintenance tasks on their assets. These documents could be in various formats like MS Word, PDF, links to HTML files or application used to display technical manuals, and so on. All these documents are referred to

collectively as Interactive Electronic Technical Manuals (IETM). Examples of such documentation include the appropriate page or chapter of a Maintenance Planning Document (MPD) or Aircraft Maintenance Manual (AMM).

CAMO allows you to create IETMs and associate them with existing links and attachments. They are then assigned to configuration slots, part groups, part numbers, task definitions, fault definitions, warranty contracts, vendors, tasks, and faults. You can associate IETMs with any class of requirement, job card, or block. When a requirement is initialized based on a requirement definition, the technical references and attachments of the requirement definition are copied to the newly created requirement as long as they are applicable to the operator and applicability codes of the target inventory of the requirement.

Technical references and attachments not associated with IETMs are referred to as ad hoc technical references and ad hoc attachments.

Creating IETMs

You can create IETM records in CAMO and then add their technical references and attachments.

The high-level workflow is as follows:

1. The user creates an IETM and assigns the IETM to one or more assemblies.
2. The user adds IETM Topics to the IETM.

   Each Topic is either a technical reference (a link to an external manual) or an attachment.
3. The user associates the IETM technical references and attachments with the task definitions or with actual tasks to provide technicians all the necessary information on how to perform the task.

IETMs can be updated at any time. All baseline task definitions plus actual tasks in ACTIVE or FORECAST status (tasks that are not started), display current notes and information for associated IETM or technical references. Actual tasks in all other states retain a copy of the notes that were current at the time the task status changed from ACTIVE or FORECAST.

To create or delete IETMs, you must have a role that has the associated permission settings and that have access to the IETM to-do list tab in CAMO.

If you need to print the technical reference or attachment at the same time as the job card is printed, it must be a technical reference link to a PDF file or an attachment in the PDF file format.

Adding Technical References to IETMs

Technical references are hyperlinks to the content of an IETM.

Different operators may use different technical references for the same IETM on the same type of aircraft. CAMO lets you specify different technical references per operator for a single IETM. Also, you can set an applicability range for a technical reference so that it only applies to a subset of

inventory whose applicability codes fall within that range. Therefore, an IETM technical reference can apply to:

- A specific operator's inventory.
- Only the inventory whose applicability code(s) fall within a defined the applicability range.
- The subset of a specific operator's inventory that matches the defined applicability range.

You can create dynamic technical reference hyperlinks for task definitions, and the tasks created from them, using different Contexts and Variables.

Use a Context to specify that the generated URL depends on whether the hyperlink is launched from a task or task definition. Technical references link to IETM content in three different contexts: Task Definition Context, Task Context, or Default Context.

Use a Variable to specify that the generated URL depends on the properties of the task or task definition. CAMO populates the variable name with the corresponding CAMO field data.

Task Definition Context

The Task Definition Context is the portion of the technical reference URL used when you launch the technical reference URL from a task definition.

The Technical Reference URL = {Common Prefix} + {Task Definition Context}

You can use the following variables within the Task Definition Context portion of the technical reference URL:

Variable Names	Populated Variable
[Technical Reference Name]	Technical Reference Details page: Name field (mandatory field)
[Technical Reference Type]	Technical Reference Details page: Type field (optional field)
[Username]	The current user logged into CAMO
[Assembly Code]	Any task definition details page: Assembly field (mandatory field)
[Config Slot Code]	Any task definition details page: Config Slot field (mandatory field)
[Task Code]	Any task definition details page: Code field (mandatory field)

Task Context

The Task Context is the portion of the technical reference URL used when you launch the technical reference URL from a task or fault.

The Technical Reference URL = {Common Prefix} + {Task Context}

You can use the following variables within the Task Context portion of the technical reference URL:

Variable Names	Populated Variable
[Technical Reference Name]	Technical Reference Details page: Name field (mandatory field)
[Technical Reference Type]	Technical Reference Details page: Type field (optional field)
[Username]	The current user logged into CAMO
[Assembly Code]	Task Details page, Assembly field (mandatory field)
[Task Barcode]	Task Details page, Barcode field (mandatory field)
[Config Slot Code]	Task Details page, Config Slot field (mandatory field)
[Task Code]	Task Details page, Task Code field (mandatory field)
[Aircraft Registration Code]	Inventory Details page, Registration Code field (mandatory field)
[Inventory Part Number]	Inventory Details page, OEM Part No field (mandatory field)
[Inventory Serial Number]	Inventory Details page, OEM Serial No field (mandatory field)
[Inventory Lot Number]	Inventory Details page, OEM Lot No field (optional field)
[Applicability Code]	Inventory Details page, Applicability Code field (optional field)

Default Context

The Default Context is the portion of the technical reference URL used outside a task or task definition context or when the task definition Context or the task Context is not specified.

The Technical Reference URL = {Common Prefix} + {Default Context}

You can use the following variables within the Default Context portion of the technical reference URL:

Variable Names	Populated Variable
[Technical Reference Name]	Technical Reference Details page: Name field (mandatory field)
[Technical Reference Type]	Technical Reference Details page: Type field (optional field)
[Username]	The current user logged into CAMO

As an example, if you create a technical reference for an IETM with the following information:

- Common Prefix: *http://MyWebsite.com/*
- Task Definition Context: *MyTaskDefinitions/[Assembly Code]*
- Task Context: *MyTasks/[Aircraft Registration Code]*

You can add this technical reference to any task definition. When this technical reference link is launched from a task definition with an assembly code of 737-200, CAMO will generate the following URL for the technical reference target:

http://MyWebsite.com/MyTaskDefinitions/737-200

The technical reference link is added to all tasks that are created from the original task definition. When the technical reference link is launched from a task with an aircraft registration Code of 83, CAMO will generate the following URL for the technical reference target:

http://MyWebsite.com/MyTasks/83

Some variables represent optional fields within CAMO, which means that they may not contain data. CAMO will not populate empty variables. For example, if a URL is comprised of *www.mywebsite.com/[Inventory Lot Number]/[Inventory Part Number]*, and the inventory lot number is not specified for a task, but the inventory part number is PN_123, then CAMO will generate the following URL: *www.mywebsite.com//PN_123*.

You can mark technical references that are in PDF as printable. CAMO appends printable technical references to the associated job cards when the job card is previewed online.

Note The context link must not contain spaces. Having spaces will result in an error if you try to print the task card containing the technical reference.

Adding Attachments To IETMs

Attachments are files that you upload to an IETM, which can be accessed by tasks and their associated task definitions, to which you assign the IETM.

You can also add attachments that are not associated with an IETM to actual tasks and task definitions. These attachments are referred to as ad hoc attachments.

You can also mark PDF attachments as printable.

Operators and applicability codes for IETMs

You can restrict the inventory to which IETM technical references and attachments apply by specifying an applicability range. Also, you can specify the operator for which each IETM reference and attachment applies. Therefore, in a single task job card definition, you can have several IETM technical references that each apply to different operators and/or different subsets of inventory. When the job card definition is initialized into actual tasks, each task includes only the IETM technical references that have the same applicability range and the same operator as the inventory to which the job card task applies.

If you modify an inventory's operator or applicability code, planned tasks on that inventory are updated to the correct IETM technical reference upon saving changes to the inventory. For example, if you add an operator to an aircraft inventory item, all of the planned tasks that apply to the aircraft, its sub-assembly, and sub-inventory are updated with technical references or attachments, specific to the operator and applicability range.

Baseline synchronization

Baseline synchronization is a background job that runs in CAMO to update actual tasks to the most recent changes made in the maintenance baseline.

Any changes made to a task definition should also apply to existing tasks that were created from the previous version of the task definition. When new task definitions are activated, actual tasks must be created for the inventory to which the definition applies. Other changes made to part numbers or inventory items also make it necessary for CAMO to apply changes to tasks. CAMO makes the necessary changes using a process called baseline synchronization.

When CAMO applies baseline synchronization to a task it updates all attributes of the task. Attributes can include priority, work type, labor requirements, and part requirements. The updates use information from the most recent active revision of the associated task definition. However, if the task itself has attributes that have been updated by a user, CAMO leaves those attributes unchanged. In other words, user updates to the task take precedence over revisions originating from changes to the task definition.

The following items are not affected by baseline synchronization:

- Master panel cards and reference documents tasks as they are never initialized as active tasks.
- Tasks that are assigned to a work package that is in one of the following statuses: Commit and In Work.

CAMO periodically runs baseline synchronization in the background on the CAMO server. A CAMO administrator can change the settings for this server job.

Baseline synchronization does the following:

1. Identifies the inventory items that require synchronization and the blocks and requirements that may have to be remapped based on the changes made to the baseline.
2. Updates the information for the inventory items that require synchronization. Baseline synchronization cancels, updates, or initializes tasks associated with inventory according to the changes made to the baseline.
3. Updates the mapping between requirements and blocks.

Use the CAMO configuration parameters to customize the baseline synchronization process.

Identification of inventory to be synchronized

CAMO marks inventory for synchronization when certain conditions apply to that inventory. The following table explains how CAMO identifies the inventory that requires synchronization:

Condition	What is marked for synchronization
A user uncommits a work package.	The main inventory for all tasks assigned to the work package.
A user removes a task from a work package that has a status of either Commit or In Work.	The task's main inventory.
Inventory is created under one of the following classes: BATCH, SER, TRK, ASSY, ACFT.	The entire inventory hierarchy.
Inventory is attached using the Attach Inventory button, or installed by completing the installation portion of a part requirement.	The inventory and its sub-inventory.
Inventory is detached using the Detach Inventory button, or removed by completing the removal portion of a part requirement.	The inventory and its sub-inventory.
An aircraft or engine operator is changed.	The entire inventory hierarchy.

Condition	What is marked for synchronization
An aircraft fin number, line number, or variable number is changed.	The entire inventory hierarchy.
The part number or serial number is changed for an inventory item.	For inventory of class ACFT, the entire inventory hierarchy. For inventory of class ASSY, the inventory and its sub-inventory. For component inventory, only the inventory item.
The inventory class associated with a part number is changed.	All inventory for any of the assigned part numbers.
The owner code or owner name is changed for an inventory item.	For inventory of class ACFT, the entire inventory hierarchy. For inventory of class ASSY, the inventory and its sub-inventory. For component inventory, only the inventory item.
The applicability code for an aircraft or assembly is changed.	The entire aircraft or assembly.
The manufacturer is set for a part number.	All inventory for the part number.
The OEM part number is set for a part.	All inventory for the part number.
The manufacturer or lot number is changed for a component inventory item.	The modified inventory.
An inventory item changes configuration slot.	The modified inventory and its sub-inventory.
A configuration slot task definition is activated.	All inventory associated with the configuration slot.
A configuration slot task definition becomes obsolete.	All inventory associated with the configuration slot, and for which there are actual tasks based on the task definition.
A part number task definition is activated.	All inventory for any of the assigned part numbers.

Condition	What is marked for synchronization
A part number task definition becomes obsolete.	All inventory for the part number, and for which there are actuals tasks based on the task definition.
A maintenance program is activated.	All inventory that has the same operator as the maintenance program and that is associated with any task definition that has changed revision since the last approved revision of the maintenance program.
A temporary revision of a requirement definition is issued.	All inventory associated with the revised requirement definition.
The Synchronize Maintenance button is clicked.	The entire inventory hierarchy.
The Run Zip Job button is clicked on an aircraft or assembly.	Nothing is marked for baseline synchronization. **Run Zip Job** queues a zip-only pass for that inventory tree. It does not run **Synchronize Maintenance**. See *Run a zip job for an aircraft or assembly*.
A mandatory task (one that is not on-condition) has been canceled for an inventory item.	The inventory for which the task was canceled.

Allow or prevent synchronization

About this task

There is a lot of information to enter into CAMO when you create an inventory. It is possible that the new inventory records are not completed in a single operation. The next time baseline synchronization runs, it could initialize tasks for inventory records that are incomplete.
To avoid this, the default CAMO behavior is to prevent synchronization for newly created aircraft, assemblies, and loose inventory whose records have the condition of "inspection required" (INSPREQ).

If synchronization is prevented, the entire inventory hierarchy is ignored by baseline synchronization until you allow synchronization.

However, your organization can choose to configure CAMO to allow synchronization of new inventory, even if it has the inspection required condition. In this situation, when you create an inventory record and know that it is incomplete, you must prevent synchronization on the inventory.

You can allow or prevent baseline synchronization for aircraft, assembly, or loose inventory that are not locked and are not in one of the following statuses: Archive, Scrap, or Condemn.

To allow or prevent synchronization of an inventory, do the following:

Steps

1. Navigate to the required inventory's details page.
2. Click the Allow Synchronization or Prevent Synchronization button (you will only see one of these).

Note Preventing synchronization on an inventory item is not the same as excluding a single requirement from the zip job. To run a zip-only pass for an aircraft or assembly without preventing synchronization, use **Run Zip Job** instead. See *Run a zip job for an aircraft or assembly*.

Applying baseline synchronization

CAMO carries out baseline synchronization in two phases:

1. Cancel, update, or initialize the affected tasks.
2. Update the mapping between requirements and blocks.

Inventory records are retrieved for baseline synchronization if the following conditions apply:

- The inventory is marked for synchronization, based on the conditions described in "Identifying the inventory to be synchronized".
- The inventory is not locked.

- Synchronization is allowed—it has not been prevented for that inventory.

Canceling, terminating, updating and initializing tasks

For each inventory record identified for baseline synchronization, CAMO performs the following actions with the associated tasks:

- Cancels tasks that were initialized but that are no longer relevant.
- Terminates tasks that will never be executed again.
- Updates tasks that are not on the correct revision.
- Initializes tasks that should be initialized.

If baseline synchronization cancels a task, or moves the due date of the task to a later date, it may also change the condition of the associated inventory in certain conditions. For example, if baseline synchronization moves the due date of a recurring task that was scheduled to meet a maintenance deadline on the inventory to a date which is after the maintenance deadline, the inventory condition for a loose item that was ready for issue (RFI) will change to Repair Required (REPREQ).

Canceling tasks

Baseline synchronization automatically cancels tasks that match one of the following criteria as long as the tasks are not assigned to a work package that has the status of Commit or In Work:

- The task is based on a task definition that is now obsolete.
- The latest revision of the task definition is no longer applicable for the inventory. For example, the task applicability rules were changed and no longer apply to specific inventory items, or the inventory item itself was modified and has a different part number that makes the task no longer applicable to the item.
- The task is a based on a job card that is no longer assigned to the requirement.

If canceled tasks are based on a block or requirement definition, the tasks are identified as requiring remapping.

The following table describes how CAMO cancels each type of task.

Canceling tasks

Task type or status	Action
Job card task type	The job card is unassigned from its current workscope and then canceled.
Requirement task type	If the requirement task is assigned to a parent task, it is removed from the parent task and then canceled.

Task type or status	Action
Block task type	All requirements for the block are unassigned and then the block is canceled.
Forecast task status	The task is deleted from the system instead of being canceled.
Active task status	The task is canceled and marked as being canceled by CAMO, as opposed to by a user. CAMO adds a note to indicate the reason for the cancellation.

Terminating tasks

Terminating a task means that you will never execute the task again. When you terminate a task, baseline synchronization will never again initialize that task for the inventory for which you terminated it.

Updating tasks

Baseline synchronization automatically updates tasks to the correct revision of their task definitions. CAMO determines the correct revision using the following criteria:

- Job cards must always be on the active revision of the task definition; this applies to all job cards tasks including those that are associated with requirements that are in maintenance programs.
- Blocks must always be on the active revision of the task definition.
- Requirements not in a maintenance program must always be on the active revision of the task definition.
- Requirements in a maintenance program and initialized on an aircraft must be on the approved version of the task definition for the aircraft's operator.
- Requirements in a maintenance program and initialized on non-aircraft inventory must always be on the active revision of the task definition.

Master panel cards, reference documents and tasks assigned to a work package that have the Commit or In Work status are not updated by baseline synchronization. Users can update job cards in committed or in work work packages manually.

CAMO performs the following activities to update a task:

- Update the basic details of the task to reflect the revised task definition. If the user has manually changed the details of the task, CAMO does not overwrite those changes. Details that are updated include:
  - Task definition revision link
  - Task subclass

    - Task priority
    - Task originator
    - Task reference
    - Task instructions
    - Estimated duration
    - Issue to account
    - Soft deadline indicator. Next shop visit tasks always retain their soft deadlines.
    - Minimum planning yield
    - Work types
    - Document reference
    - Task name
    - Task description
    - Prevent execution indicator
    - Prevent execution review date
- Update the list of attachments by:
    - Removing attachments from the task that were removed from the revised task definition.
    - Adding attachments to the task that were added to the revised task definition.
- Update the list of technical references by:
    - Removing technical references from the task that were removed from the revised task definition.
    - Adding technical references to the task that were added to the revised task definition.
- For job cards and executable requirements, update the list of labor requirements by:
    - Removing all existing labor requirements from the task.
    - Adding the labor requirements according to the revised task definition.
- For job cards and executable requirements, update the list of steps by:
    - Removing all existing steps from the actual task.
    - Adding the steps according to the revised task definition; the steps added to the tasks have the status value of Pending.
- For job cards and executable requirements, update the list of part requirements by:
    - Removing part requirements from the task that were removed from the revised task definition.
    - Adding part requirements to the task that were added to the revised task definition.
- For job cards and executable requirements, update the list of measurements by:
    - Removing measurements from the task that were removed from the revised task definition.
    - Adding measurements to the task that were added to the revised task definition.
- For job cards and executable requirements, update the list of tool requirements by:

  - Removing tool requirements from the task that were removed from the revised task definition.
  - Updating tool requirements where the scheduled hours changed in the revised task definition.
  - Adding tool requirements to the task that were added to the revised task definition.
- For job cards and requirements, update the list of zones by:
  - Removing zones from the task that were removed from the revised task definition.
  - Adding zones to the task that were added to the revised task definition.
- For job cards and requirements, update the list of panels by:
  - Removing panels from the task that were removed in the task definition revision.
  - Adding panels to the task that were added in the task definition revision.
- For requirements and blocks, update the scheduling rules. The scheduling rules on the task are synchronized to match the scheduling rules on the revised task definition.

> **Note**
>
> The scheduling rules of tasks that are based on a requirement or block definition that had the Allow Manual Scheduling option selected, and still have the option selected in the new active revision, are not updated by baseline synchronization.

- For requirements and blocks, update the issue to accounts by:
  - For blocks, setting the issue to account on the block and all of its sub-tasks (requirements and job cards). This in turns sets the issue to account on the part requests for any of those tasks.
  - For requirements, setting the issue to account on the requirement and all of its job cards. This in turns sets the issue to account on the part requests for those job cards.

Initializing tasks

Baseline synchronization automatically initializes missing tasks that meet certain criteria. CAMO determines the tasks to initialize using the following criteria:

- The task definition is a block, requirement or job card.
- The task definition is mandatory (not on-condition).
- If the task is a block in a block chain, it is the first block. CAMO only auto-initializes the first block in a block chain.
- The task definition is applicable according to the part group applicability range.
- The task definition is applicable according to the task definition applicability range.
- The task definition is applicable according to the task definition applicability rule.

- The task definition has a Complies link to another task definition—such as a reference document —that is applicable to some assets. The linked task definition is initialized even if it has a second Complies link to a historical or non-applicable task, as long as it has one COMPLIES link to an applicable task.
- The task definition is a job card and it has a corresponding requirement that is missing the job card. Job cards are never auto-initialized as loose tasks.
- The task definition was initialized, but the resulting task was subsequently canceled by a user or by CAMO, for example, because the task is marked as CANCEL ON INSTALL or CANCEL ON AIRCRAFT INSTALL. In this case, the newly initialized task will not be scheduled from the previously completed task if any, and manual intervention may be required to update its scheduling.
- A non-recurring on-condition task was revised to a recurring on-condition task. In this case, initializing the task (manually, because it's on-condition) will not automatically schedule the task from the previously completed instance if any.

Note

Baseline synchronization may initialize a block or requirement that is scheduled on the manufactured or received date for inventory that does not have these dates recorded. In this case, CAMO schedules the block or requirement as explained in "*Determining the Scheduling Start Value*".

CAMO does not initialize tasks if any of the following conditions apply:

- The task is a reference document or a master panel card task definition.
- The task class is CORR. Corrective tasks are intended to be used as troubleshooting tasks on fault definitions. They can be initialized manually on their own or as subtasks under faults when the system is configured to allow it.
- The task definition is marked as CREATE ON INSTALL or CREATE ON AIRCRAFT INSTALL.
- The task definition is a job card and its requirement's task class is CORR. You must manually initialize these tasks using the Corrective Actions button on the fault.
- The task definition is a job card and its requirement is assigned to a work package with status Commit or In Work.
- The task definition has been terminated. When a task is terminated—by a user or by CAMO, for example because of a Terminate Following Task dependency—baseline synchronization will never initialize that task again for the inventory for which it was terminated.
- The task is already initialized, and it has one of the following status values: Active, In Work, Pause or Inspection Required.
- The task is non-recurring and has already been accomplished.

- The task is a block or requirement that is created upon the completion of another block or requirement.
- The task has a COMPLIES link to a historical or non-applicable task, for example, a requirement that complies with a non-applicable or historical reference document.

Note When a block is initialized, its requirements are not auto-initialized at that time. They are all initialized separately, and then re-mapped.

Updating the mapping between blocks and requirements

As part of the baseline synchronization process, CAMO updates the mapping between the blocks and the requirements in a maintenance program, making sure that requirements are assigned to the proper blocks according to the baseline mapping. This process is sometimes referred to as block zipping. CAMO only updates the active block and the forecast blocks. Mappings involving requirements in committed work packages are left unchanged.

After all task deadlines have been recalculated and updated for the highest inventory in the inventory hierarchy, baseline synchronization will properly align requirements with the appropriate block.

The re-mapping of blocks and requirements can be configured in the following two ways using the configuration parameter BSYNC_IGNORE_ZIPPING_DATE_MISALIGNMENT:

- If this parameter is FALSE, a requirement is not assigned to a block if it is due before the block. The requirement is left out of phase, and the next instance of the requirement will be assigned to a block.
- If the parameter is TRUE, requirements are assigned to blocks regardless of their respective due dates. This affects the due date of the entire block because the due date matches the earliest deadline of all the requirements in the block.

A planner can exclude an individual requirement from this mapping by clicking **Unzip Requirement**. This action excludes the requirement from the zip job and unassigns it from the block, regardless of the BSYNC_IGNORE_ZIPPING_DATE_MISALIGNMENT setting. The exclusion remains in effect until the planner clicks **Zip Requirement**, which clears the exclusion and allows the requirement to be zipped back into an eligible block. This lets planners manage exceptions without affecting how the parameter applies to other requirements. For more information, see *Unzip a Requirement from a Block*.

Updating mapping information examples

The following examples illustrate how requirements are mapped when the parameter BSYNC_IGNORE_ZIPPING_DATE_MISALIGNMENT is set to FALSE.

Example 1:

- The A block chain consists of 4 blocks.
- The requirement must be assigned to every block in the chain.
- The active requirement R1 is due after the active block.
- The active requirement R1 is assigned to the active block A2.
- The forecast requirements are assigned to the forecast blocks.

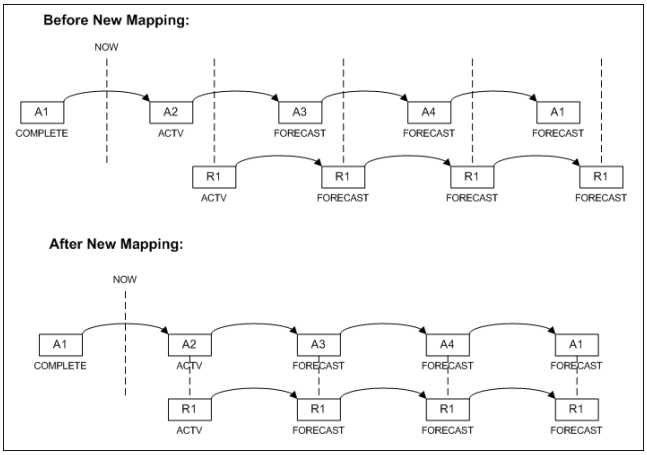

Mapping example 1

Example 2:

- The A block chain consists of 4 blocks.
- The requirement must be assigned to every block in the chain.
- The active requirement R1 is due after the active block.
- The requirement chain has only one forecast requirement.
- The active requirement R1 is assigned to the active block A2.
- The forecast requirement is assigned to the forecast block A3.

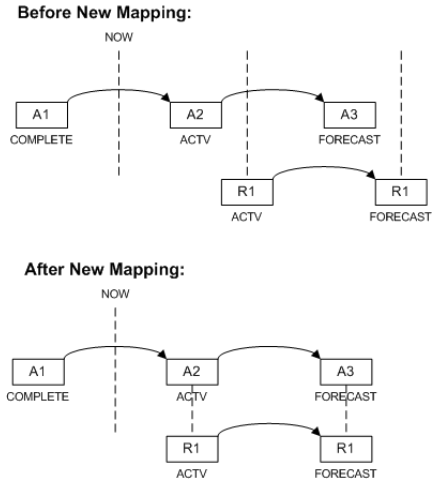

Mapping example 2

Example 3:

- The A block chain consists of 4 blocks.
- The requirement must be assigned to A2 and A4.
- The active requirement R1 is due before its first block A2.
- The requirement is not forecast past the active requirement.
- The active requirement R1 remains loose.

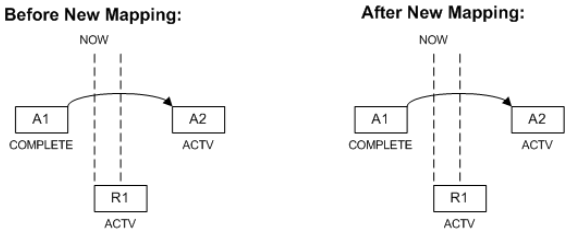

Mapping example 3

Unzip a requirement from a block

Exclude a single requirement from the zip job and detach it from its block without affecting how the BSYNC_IGNORE_ZIPPING_DATE_MISALIGNMENT parameter applies to other requirements.

About this task

When a requirement with an earlier due date is zipped into a block, the entire block can be pulled to an earlier date to match it. Instead of manually unassigning the requirement from the block, only to have the next baseline synchronization zip it back in, you can unzip the requirement. CAMO then excludes the requirement from the zip job until you zip it back into a block.

Unzip Requirement is available on the Task Details page when all of the following conditions are met:

- You have the ACTION_ZIP_UNZIP_REQUIREMENT permission.
- The task is a non-historic requirement.
- The requirement is not already excluded from the zip job.
- The requirement's immediate parent is an active block, not a check or repair order that is not assigned to a work package.
- The block's inventory is unlocked.

Steps

1. Find the requirement and go to its Task Details page.
2. Click **Unzip Requirement**.
3. On the Reason and Notes page, select a reason and enter notes, then click OK.

   The reason and notes are required only when your administrator has configured UNZIP_REASON_AND_NOTES_MANDATORY to be mandatory; otherwise you can leave them blank.

CAMO detaches the requirement from the block and excludes it from the zip job. The Task Details page displays the banner **THIS REQUIREMENT IS EXCLUDED FROM ZIPPING**, and **[UNZIPPED]** is appended to the requirement's name on list pages. The exclusion and the detachment are recorded on the History tab of both the requirement and the block.

> **Note** If labor is already in work on the requirement, Unzip Requirement remains visible but the click fails.

Unzip multiple requirements from a block

Exclude multiple requirements from the zip job and detach them from a block in a single action.

About this task

Instead of unzipping requirements one at a time, you can select and unzip multiple requirements from a block in a single action. This applies the same exclusion as **Unzip Requirement** to each selected requirement. The **Subtasks** list on the block's **Task Execution** tab displays a checkbox column and the **Unzip Requirements** button when all of the following conditions are met:

- You have the **ACTION_ZIP_UNZIP_REQUIREMENT** permission.
- The parent task is a block, not a check or repair order.
- The block is active and non-historic.
- The block is not assigned to a work package.
- The block's inventory is unlocked. Only requirement rows can be selected.

Steps

1. Go to the block's **Task Details** page and open the **Task Execution** tab.
2. Select the checkbox for each requirement that you want to unzip.
   - You can select up to 200 requirements at a time.
3. Click **Unzip Requirements**.
   - If all selected requirements are ineligible, a message indicates this and no requirements are unzipped.
   - If some requirements are ineligible, a confirmation page lists them grouped by reason. Click **Yes** to continue with only the eligible requirements, or click **No** to cancel.
4. On the **Reason and Notes** page, select a reason and enter notes, then click **OK**.
   - This step is required only when **UNZIP_REASON_AND_NOTES_MANDATORY** is enabled. One reason and note pair applies to the entire batch.

CAMO excludes each eligible requirement from the zip job and detaches it from the block. Each requirement receives its own detach entry on the block's **History** tab. The shared reason and notes are recorded as a single additional entry on the block for the batch.

Zip a requirement into a block

Clear a requirement's exclusion from the zip job and queue it to be zipped back into an eligible block.

About this task

Zip Requirement reverses **Unzip Requirement**. It is available on the Task Details page when all of the following conditions are met:

- You have the **ACTION_ZIP_UNZIP_REQUIREMENT** permission.
- The task is a non-historic requirement.
- The requirement is currently excluded from the zip job.
- The requirement has no parent task.
- The requirement's inventory is unlocked.

Steps

1. Find the requirement and go to its Task Details page.
2. Click **Zip Requirement**.

CAMO clears the exclusion and queues a scoped zip pass for the requirement. It does not run **Synchronize Maintenance** and does not zip the rest of the fleet. The requirement's **[UNZIPPED]** suffix and the Task Details banner are removed once the zip job assigns the requirement to a block. The assignment is then recorded on the History tab of both the requirement and the block.

Note **Zip Requirement** remains available even when no eligible block currently exists. However, the action fails if the candidate block is historic, in a work package with statuses of **Commit** or **In Work**, a completed instance of the same requirement definition is already assigned to the block, or if the requirement's deadline is earlier than the block's and **BSYNC_IGNORE_ZIPPING_DATE_MISALIGNMENT** is **FALSE**.

Run a zip job for an aircraft or assembly

Queue a zip-only pass for an aircraft or assembly without running a full baseline synchronization.

About this task

Run Zip Job queues the same zipping pass that baseline synchronization runs, scoped to a single aircraft or assembly and its sub-inventory, without running **Synchronize Maintenance**. Requirements that are currently excluded from the zip job (see *Unzip Requirement*) remain excluded.

Run Zip Job is available on the Inventory Details page when all of the following conditions are met:

- You have the **ACTION_RUN_ZIPPING** permission.
- The inventory is an aircraft or assembly.
- The inventory is unlocked.
- Synchronization is not prevented for the inventory.

Steps

1. Go to the aircraft's or assembly's **Inventory Details** page.
2. Click **Run Zip Job**.

CAMO queues a zip-only pass for the inventory tree. Any requirement the zipper places into a block as a result is recorded as the placing user on the History tab of the requirement and the block—rather than with the usual baseline-synchronization system note.

> **Note** **Run Zip Job** is different from **Zip Requirement**, which queues a scoped zip pass for a single requirement, and from **Synchronize Maintenance**, which runs a full baseline synchronization for the inventory. An incremental zip pass can still run as part of synchronization when tasks are created or updated.

Life-limited parts

Life-limited parts (LLP) are parts that have a predictable aging profile and have significant consequences if they fail, and therefore have a specified service life. A life limit can be defined by accumulated cycles, hours, or any other mandatory replacement limit of an LLP. This means each of these LLPs can only operate a certain number of flight hours, flight cycles, or other pre-determined parameters before it is removed from the aircraft and destroyed. LLPs cannot be restored and must be discarded upon expiration.

Typically, the manufacturers determine the life limit of a part, which is described in the manufacturers' maintenance documents or instructions for continued airworthiness. In some cases, the life limits for a part may be updated as described in an SB or an AD. These guidelines

are used to determine the part number's life limit in CAMO. Most LLPs are governed by either the number of flight hours operated or the number of flight cycles operated, so in those cases, the part's expiry is reached when the set number of hours/cycles are collected.

In CAMO, component life limits are modeled as discard requirements, i.e. requirements with a task class of DISCARD. The life limit itself will be recorded as the discard requirement's scheduling threshold. By using requirements to model life limits, CAMO is able to ensure that hard-time discard tasks are visible to all users, usage is properly tracked and accounted for, and the necessary procedures can be invoked when the component's life limit is reached (such as a component removal and scrapping).

Note The term "life-limited parts" is usually used for engine and landing gear parts, but this section is also applicable to all aircraft parts with life limits, commonly referred to as airworthiness limitation items.

Related concepts

Shelf life and shelf life expiry
Replacement requirements
Requirement definitions
Threshold, Initial and Repeat intervals

Related tasks

Scrap inventory

Create discard requirements for life-limited parts

You create discard requirements for LLPs to make sure they are discarded upon expiration. After the component has been destroyed (rendered permanently unrepairable), a certificate of destruction is issued for the LLP, after which its status is set to SCRAP in CAMO.

About this task

To create a requirement to discard LLPs, do the following:

Steps

1. On the **Requirement Search** page, click **Create Requirement**.
2. On the **Create Requirement** page, provide the required information. Note the following:
   - In the **Requirement Type** area, select **Config Slot**.

     It is recommended using Config Slot requirements rather than Part Number requirements because CAMO cannot include part number requirements in the aircraft's maintenance program.

- In the **Classification** area, select **Class** to be **DISCARD (Discard)**.
- In the **Scheduling Details** area, verify that the **Recurring** check box is not selected.
- In the **Scheduling Details** area, select **Manufactured Date** from the **Schedule From:** list.
- In the **Planning Details** area, make sure the **On Condition** check box is not selected.
- In the **Planning Details** area, make sure the **Must Be Removed** is selected as **Off Parent** or **Off Wing**.

3. Click **OK**

   You must now add a scheduling rule to this requirement.
4. On the details page for the requirement, click the **Scheduling** tab.
5. Click **Add Scheduling Rule**.
6. On the **Add Scheduling Rule** page, provide the required information. Note the following:
   - **Usage Parm**: Select **CYCLES (Cycles)** or **HOURS (Flying Hours)**.
   - **Threshold**: Enter the value for life limit of the part. For example, if the LLP is set to expire after 15000 cycles, enter 15000.
   - **Deviation (Qty)**: Enter 0.
   - **Sched to Plan Low**: Enter 0.
   - **Sched to Plan High**: Enter 0.
7. Click **OK**.

> **Note** A discard requirement is not used to remove the inventory item from an assembly, therefore a replacement requirement must also be defined against the configuration slot. This replacement requirement will then be automatically created by CAMO to uninstall the LLP component, so that the discard requirement can be completed.

Related concepts

Replacement requirements

Related tasks

Set up prorated life limits

Prorated life limits

While life limits on components are normally static, there are some cases where a component's life limit dynamically changes depending upon how that component is used.

An example of this can be found in engines. Some engines can be configured to run at different thrust ratings. For example, the CFM56 engine can be configured to run at 24k lbs thrust (for installation on B737-700) or 27k lbs of thrust (for installation on B737-800). In addition, there are

certain modifications, sometimes known as tech insertions, that can be made to an engine that may alter its thrust and performance profile.

When an engine runs at different thrust ratings, the life limits of certain components within the engine may change. In particular, these components will typically last longer when the engine runs at a lower thrust rating.

To calculate how many cycles are remaining on each component, you need to take into account what percentage of the component's life has already been spent, based on the thrust ratings it has undergone. You then use this history to calculate the current usage (or life) of the component prorated to the current thrust rating. The remaining life of the component is calculated based on the current thrust rating and the accumulated usage under one or more different thrust ratings. The life-limit corresponding to the current thrust rating will be used.

For example, if you are currently operating at 24k thrust rating (a lower thrust rating), then every previous cycle that occurred while the engine was at 27k will count as slightly more than 1 cycle. So if you previously flew 5000 CYCLES at 27k, they would be the equivalent of 7500 CYCLES at the current 24k.

In CAMO, life limits are enforced by tracking usage and creating discard requirements. To manage life limits at all thrust ratings in CAMO, the following high-level steps are involved:

1. Create a different engine part number for each thrust rating.
2. Create accumulated usage parameters for each thrust rating to track the number of cycles performed at each thrust rating.
3. Create calculated usage parameters for each thrust rating to allow CAMO to calculate the prorated usage for components that have spent time at multiple thrust ratings.
4. Create discard requirement definitions against each tracked component that is identified as being a prorated LLP.

Although this section uses examples for engines to describe this functionality, it is applicable to any sub-assembly type like APUs or landing gear.

The following figure displays the workflow of updating task deadlines with usage at thrust rating in comparison with normal usage.

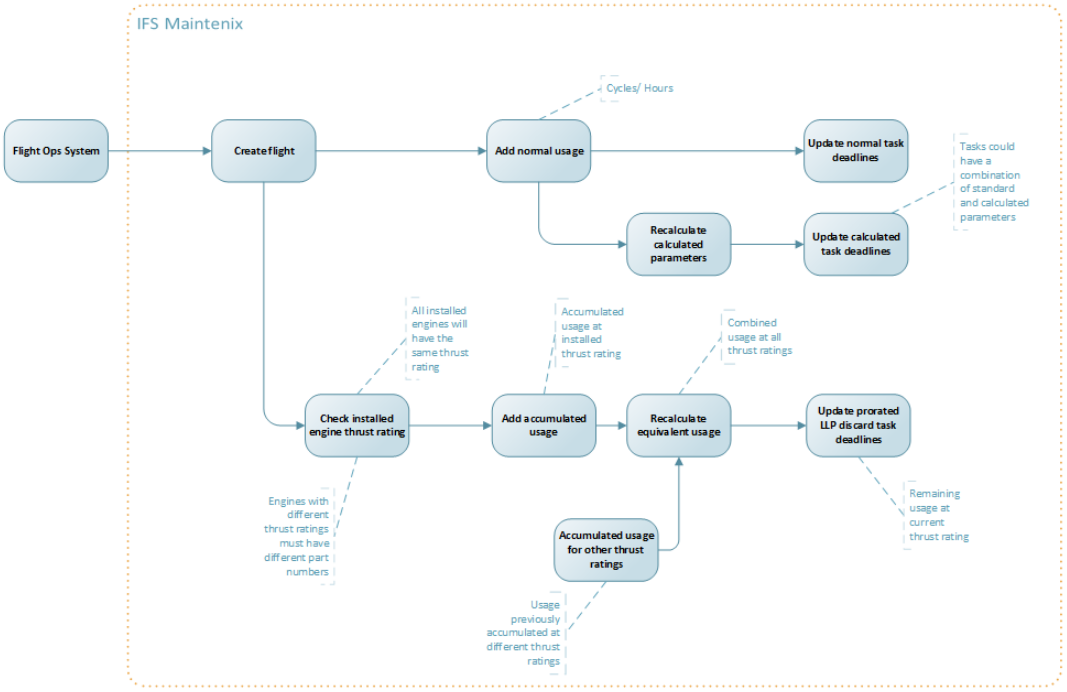

Prorated LLP Workflow

For more information on the prorated LLP solution, see the related task below.

Important

When you are creating or editing flights using the Maintenix Flight API, the prorated life limits solution can only work when you're using flights-2.0 messages. The flights-1.0 messages will not include accumulated parameters in the usage records, thus not providing you with usage at each thrust rating. For more information on flight messages, see the *Maintenix Flight API Guide*.

Related tasks

Set up prorated life limits

Accumulated usage parameters

Accumulated usage parameters are parameters that track the number of cycles or hours performed at each thrust rating of an engine.

Accumulated parameters are used as inputs for calculated parameters that calculate equivalent cycles or hours at each thrust rating of an engine. There must be one accumulated usage parameter for each thrust rating-based part number.

Create accumulated usage parameters

You create accumulated usage parameters to track the number of cycles performed at each thrust rating. There must be one accumulated usage parameter for each thrust rating based part number.

Prerequisite

There must be one part number for each thrust rating of the engine. These part numbers are required to allow the accumulation of cycles against the correct thrust rating usage parameter. This procedure is a part of the process of setting prorated life limits for engine components. For more information, see *Prorated life limits*.

Steps

1. Navigate to the **Assembly Details** page of the required engine and then click the **Usage** tab.
2. Under **Usage Parameters**, select the appropriate usage parameter such as**CYCLES (Cycles)** or **HOURS (Flying Hours)**.
3. Click **Create Accumulated Parameter** .
4. On the **Confirmation Required** page, click **Yes**.

   New accumulated usage parameters will be created for each assembly part number with the format: **<standard usage parameter name>-ACC-<assembly part number>**.

Set up prorated life limits

In CAMO, life limits on inventory items are tracked by discard components. For inventory items that require some form of life proration, these discard requirements are the same as those for non-prorated LLPs. However, before you can set up the discard requirements on prorated LLPs, additional setup steps are required. These involve creating calculated and accumulated usage parameters, so CAMO can correctly calculate the proration of the LLP inventory item.

About this task

To perform the initial setup required to properly manage life limits on prorated LLPs, do the following:

Steps

1. Create a new part number for each thrust rating of the engine within the engine assembly part group. For example, if the CFM56 engine has three thrust ratings (7B24, 7B26, and 7B28), you will create three part numbers to represent these thrust ratings (CFM56-7B24, CFM56-7B26, and CFM56-7B28). These part numbers are required to allow the accumulation of cycles against the current thrust rating usage parameter.
   - Assign each part number as an alternate part, in the part group defined at the root configuration slot of the engine assembly.
   - Assign each part number to the engine SUBASSY configuration slot on the aircraft assembly that the engine is installed on.

> **Note** The part number must be added to both the assembly and aircraft sub-assembly part groups because the assembly part group controls if the part is valid in that assembly, and adding the part number to both the part groups lets CAMO know that this part is allowed to be installed on the aircraft.

2. Create accumulated usage parameters that will track the number of cycles performed at each thrust rating. There must be one accumulated usage parameter for each thrust rating based part number. For example, for the CFM56 engine part numbers defined above, you will create three accumulated usage parameters (CYCLES_ACC_CFM56-7B24, CYCLES_ACC_CFM56-7B26, and CYCLES_ACC_CFM56-7B28).
3. Create calculated usage parameters that will be used to calculate the equivalent cycles at each thrust rating. For example, for the CFM56 engine part numbers defined above, you will create three calculated usage parameters (CYCLES_EQV_CFM56-7B24, CYCLES_EQV_CFM56-7B26, and CYCLES_EQV_CFM56-7B28). Note the following while creating the calculated usage parameters:
   - For the database function, add every accumulated usage parameter as an input. For example, CYCLES_ACC_CFM56-7B24, CYCLES_ACC_CFM56-7B26 and CYCLES_ACC_CFM56-7B28 are all inputs for CYCLES_EQV_CFM56-7B24. See the sample function below for more details.
   - For the database function, add a calculation input constant for each thrust rating; this will be used to record the life limit of the component at that thrust rating. Default this value to 1.
   - Create part-specific constants for each prorated component part number and each thrust rating. Set this constant's value to the life limit of that part number at the given thrust rating.

   The following sample function includes the example inputs mentioned above:

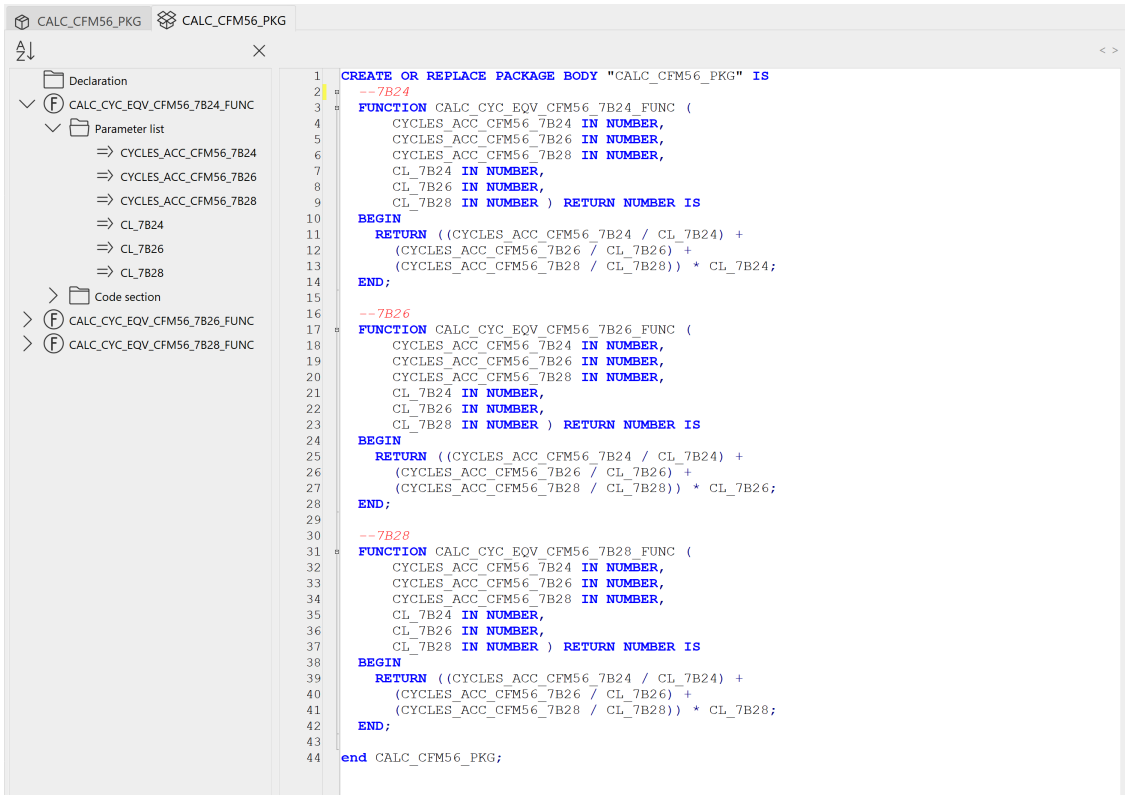

4. Assign each of these calculated usage parameters to the engine assembly and the prorated LLP sub-components (cascade each calculated usage parameter).

   Note You use the Cascade Parameters button to cascade calculated usage parameters down to all sub-configuration slots. This assigns the calculated parameters to each sub-component in the assembly hierarchy in one step.

5. Create discard requirements against each prorated LLP configuration slot, one for each thrust rating. For example, if there are two prorated LLP configuration slots, you will create six discard requirements (three discard requirements for three thrust ratings on each configuration slot).

   Whenever there is a change to the thrust rating of an engine, the system engineer sets up maintenance requirements that are issued to technicians. Once these requirements are completed, the part number of the engine will be changed automatically.

   You create modification requirements to change the part numbers for engines that can change thrust ratings.

Related tasks

Create discard requirements for life-limited parts
Create accumulated usage parameters
Define calculated usage parameters

Create part transformation (MOD) requirement definitions

Create discard requirements for prorated LLPs

Discard requirements are used to model the life limits of a part in CAMO. A discard requirement needs to be defined on each prorated LLP configuration slot, one for each thrust rating.

Prerequisite

Ensure you have set up accumulated usage parameters and calculated usage parameters for each prorated LLP.

About this task

For each of the prorated LLP configuration slot, do the following:

Steps

1. On the **Requirement Search** page, click **Create Requirement**.
2. On the **Create Requirement** page, provide the required information. Note the following:
   - In the **Requirement Type** area, select **Config Slot**.
   - In the **Identification** area, select the appropriate assembly from the **Assembly** menu.
   - In the **Identification** area, select the appropriate configuration slot from the **Config Slot** menu.

     You will create one discard requirement for each of the prorated LLP configuration slots.
   - In the **Classification** area, select **Class** to be **DISCARD (Discard)**.
   - In the **Scheduling Details** area, make sure the **Recurring** check box is not selected.
   - In the **Scheduling Details** area, select **Schedule From:** as **Manufactured Date**.
   - In the **Applicability** area, in the **Applicability Rule** box, enter an applicability rule so that it only applies if the engine has the equivalent thrust rating part number (for example, `[Assembly Part No] = 'CFM56-7B24'`). Adjust the applicability for the default thrust rating so that it will be initialized on new or loose components (for example, `[Assembly Part No] = 'CFM56-7B24' or [Assembly Part No] is null`).
   - In the **Planning Details** area, make sure the **On Condition** check box is not selected.
   - In the **Planning Details** area, make sure the **Must Be Removed** is selected as **Off Parent** or **Off Wing**.
3. Click **OK**.

What's next

You must now add a scheduling rule to this requirement.

Related tasks

Add scheduling rules to discard requirements

Add scheduling rules to discard requirements

You add scheduling rules to discard requirements for prorated LLPs to ensure they are discarded upon expiration.

Steps

1. On the details page for the required discard requirement, click the **Scheduling** tab.
2. Click **Add Scheduling Rule** .
3. On the **Add Scheduling Rule** page, provide the required information. Note the following:
   - **Usage Parm**: Select the calculated usage parameter for the prorated LLP.
   - **Threshold**: Enter the value for life limit of the part. For example, if the prorated LLP is set to expire after 15000 cycles, enter 15000.
   - **Deviation (Qty)**: Enter 0.
   - **Sched to Plan Low**: Enter 0.
   - **Sched to Plan High**: Enter 0.

   Important If there are alternate part numbers with different life limits at the requirement's thrust rating, you need to create the required part-specific scheduling rules based on the life limit of each part at the given thrust rating.

4. Click **OK**.
5. On the **Requirement Details** page, click **Activate Requirement** .

AD/SB management

You can manage airworthiness directives (ADs) and service bulletins (SBs) in CAMO, by completing the following workflow:

1. Add and activate the compliance document as a reference document in CAMO.
2. Create engineering orders (EOs) in CAMO to complete the work required by the compliance document.
3. Create links between the reference documents and the EOs.
4. Review and record the compliance status of the reference documents.
5. Run the compliance reports.

Once an AD or SB is issued, the issuing regulatory body or manufacturer might revise, supersede, or amend the compliance document. When this occurs, you are required to revise, supersede or amend the corresponding AD or SB reference document in CAMO.

Receive and activate airworthiness directives

About this task

When you receive an airworthiness directive (AD), complete the following work flow to add the AD to CAMO and activate it for compliance work.

Steps

1. Create a reference document to represent the original AD. Do one of the following:
   - Create an airframe AD, if you need to track the status at the aircraft level.
   - Create a sub-assembly AD, if you need to track the status at the engine level.
   - Create a component AD, if you need to track the status at the component level, for example, landing gear.
2. Attach or link the original AD issued by the regulatory body to the reference AD created in CAMO. The choice to add the AD as an attachment or IETM reference link is dependent on how your organization operates. Do one of the following:
   - Link a document as a technical reference.
   - Add a document as an attachment.
3. Disposition the AD reference document to specify how to handle the information or instruction included in the document. If the AD is not applicable to your fleet, select the disposition reason as NA (Not Applicable).

Create an airframe airworthiness directive

Steps

1. On the **Reference Document Search** page, click **Create Reference Document**.
2. On the **Create Reference Document** page, provide the requested information, paying attention to the following fields:
   - **Reference Document Type**: Select Config Slot.
   - **Code**: Enter the AD number.
   - **Name**: Enter the AD name or subject.
   - **Assembly**: Select the applicable aircraft assembly.
   - **Config Slot**: Select the aircraft root configuration slot or any system config slot under the aircraft assembly.
   - **Class**: Select AD (Airworthiness Directive).
   - **Subclass**: Select the appropriate subclass.
   - **Originator**: Select AD (Airworthiness Directive).
   - **Received By**: The default is your user name. If the AD was received by someone else, enter that person's user name.
   - **Received Date**: Enter the date the you received the AD.

- **Issued By**: Select REGBODY.
- **Regulatory Body**: Select the regulatory body that issued the AD.
- **Issue Date**: Enter the date that the regulatory body issued the AD.
- **Amendment Number**: Enter the AD amendment number, if applicable.
- **Applicability Description**: Enter the AD applicability/effectivity.
- **Description**: Enter the reason for the AD.
- **Revision Contact**: The default is your user name. If someone else is responsible for dispositioning the AD, enter that person's user name.

> **Note** You do not have to include the effective date and the required actions and compliance times sections included in the original AD in this reference document.

3. Complete the remaining fields as required, and click **OK**.

Create a sub-assembly airworthiness directive

Steps

1. On the **Reference Document Search** page, click **Create Reference Document**.
2. On the **Create Reference Document** page, provide the requested information, paying attention to the following fields:
   - **Reference Document Type**: Select Config Slot.
   - **Code**: Enter the AD number.
   - **Name**: Enter the AD name or subject.
   - **Assembly**: Select the applicable aircraft assembly or sub-assembly.
   - **Config Slot**: Select the sub-assembly root or system configuration slot.
   - **Class**: Select AD (Airworthiness Directive).
   - **Subclass**: Select the appropriate subclass.
   - **Originator**: Select AD (Airworthiness Directive).
   - **Received By**: The default is your user name. If the AD was received by someone else, enter that person's user name.
   - **Received Date**: Enter the date the you received the AD.
   - **Issued By**: Select REGBODY.
   - **Regulatory Body**: Select the regulatory body that issued the AD.
   - **Issue Date**: Enter the date that the regulatory body issued the AD.
   - **Amendment Number**: Enter the AD amendment number, if applicable.
   - **Applicability Description**: Enter the AD applicability/effectivity.
   - **Description**: Enter the reason for the AD.

- **Revision Contact**: The default is your user name. If someone else is responsible for dispositioning the AD, enter that person's user name.

> **Note** You do not need to include the effective date and the required actions and compliance times sections included in the original AD in this reference document.

3. Complete the remaining fields as required, and click **OK**.

Create a component airworthiness directive

Steps

1. On the **Reference Document Search** page, click **Create Reference Document**.
2. On the **Create Reference Document** page, provide the requested information, paying attention to the following fields:
   - **Reference Document Type**: Select Config Slot.
   - **Code**: Enter the AD number.
   - **Name**: Enter the AD name or subject.
   - **Assembly**: Select the applicable aircraft or sub-assembly.
   - **Config Slot**: Select the applicable tracked slot.
   - **Class**: Select AD (Airworthiness Directive).
   - **Subclass**: Select the appropriate subclass.
   - **Originator**: Select AD (Airworthiness Directive).
   - **Received By**: The default is your user name. If the AD was received by someone else, enter that person's user name.
   - **Received Date**: Enter the date that you received the AD.
   - **Issued By**: Select REGBODY.
   - **Regulatory Body**: Select the regulatory body that issued the AD.
   - **Issue Date**: Enter the date that the regulatory body issued the AD.
   - **Amendment Number**: Enter the AD amendment number, if applicable.
   - **Applicability Description**: Enter the AD applicability/effectivity.
   - **Description**: Enter the reason for the AD.
   - **Revision Contact**: The default is your user name. If someone else is responsible for dispositioning the AD, enter that person's user name.

> **Note** The effective date and the required actions and compliance times sections included in the original AD do not need to be included in this reference document.

3. Click **OK**.

Link a document as a technical reference

About this task

Technical references are hyperlinks to IETM content. You can link a physical document to a reference document as a technical reference.

Steps

1. On the **Reference Document Details** page, **Technical References** area, click ⊞. The IETM Search page opens with the buttons related to Technical References.
2. On the **IETM Search** page, click **Create Technical Reference**.
3. On the **Add Technical Reference** page, provide the required information. Note the following:
   - **Printable**: Select if the attachment is printable.

   > **Tip** To print the technical reference, it must be a link to a PDF file.

4. Click **OK**.

Add a document as an attachment

About this task

Attachments are files you can upload to a reference document.

Steps

1. On the **Reference Document Details** page, **Attachments** area, click ⊞. The IETM Search page opens with the buttons related to Attachments.
2. On the **IETM Search** page, click **Create Attachment**.
3. On the **Add Attachment** page, provide the requested information.
4. Click **OK**.

Disposition a reference document

About this task

You disposition a reference document to specify how you handled the information or instruction included in the document. Dispositioning a reference document changes its status to ACTIVE. Once active, the document cannot be edited.

Steps

1. On the **Reference Document Details** page, click **Disposition Reference Document**.
2. On the **Disposition Reference Document** page, provide the requested information and click **OK**.
3. Click **OK**.
4. If prompted, enter your password and click **OK**.

If work needs to be done on the assembly to comply with the SB, create engineering order (EO) requirement definitions and link them to the compliance reference document.

Receive and activate service bulletins

About this task

When you receive a service bulletin (SB), complete the following work flow to add the SB to CAMO and activate it for compliance work:

Steps

1. Create a reference document to represent the original SB. Do one of the following:
   - Create an airframe SB, if you need to track the status at the aircraft level.
   - Create a sub-assembly SB, if you need to track the status at the engine level.
   - Create a component SB, if you need to track the status at the component level, for example, landing gear.
2. Attach or link the original SB issued by the regulatory body to the reference SB created in CAMO. The choice to add the SB as an attachment or IETM reference link is dependent on how your organization operates. Do one of the following:
   - Link a document as a technical reference.
   - Add a document as an attachment.
3. Disposition the SB reference document to specify how to handle the information or instruction included in the document. If the SB is not applicable to your fleet, select the disposition reason as NA (Not Applicable).

Create an airframe service bulletin

About this task

Depending on the SB, you may have to perform this procedure multiple times, once for each airframe to which the SB applies.

Steps

1. On the **Reference Document Search** page, click **Create Reference Document**.
2. On the **Create Reference Document** page, provide the requested information, paying attention to the following fields:

- **Reference Document Type**: Select Config Slot.
- **Code**: Enter the SB number.
- **Name**: Enter the SB name or subject.
- **Assembly**: Select the aircraft assembly.
- **Config Slot**: Select the aircraft root configuration slot.
- **Class**: Select SB (Service Bulletin).
- **Subclass**: Select the appropriate subclass.
- **Originator**: Select SB (Service Bulletin).
- **Received By**: The default is your user name. If the SB was received by someone else, enter that person's user name.
- **Received Date**: Enter the date you received the SB.
- **Issued By**: Select MANUFACT.
- **Manufacturer**: Select the manufacturer that issued the SB.
- **Issue Date**: Enter the date that the manufacturer issued the SB.
- **Amendment Number**: Enter the SB amendment number, if applicable.
- **Applicability Description**: Enter the SB applicability/effectivity.
- **Description**: Enter a description for the SB.
- **Revision Contact**: The default is your user name. If someone else is responsible for dispositioning the SB, enter that person's user name.

3. Complete the remaining fields as required, and click **OK**.

Create a sub-assembly service bulletin

About this task

Depending on the SB, you may have to perform this procedure multiple times, once for each sub-assembly to which the SB applies.

Steps

1. On the **Reference Document** Search page, click Create Reference Document.
2. On the **Create Reference Document** page, provide the requested information, paying attention to the following fields:
   - **Reference Document Type**: Select Config Slot.
   - **Code**: Enter the SB number.
   - **Name**: Enter the SB name or subject.
   - **Assembly**: Select the applicable aircraft sub-assembly.
   - **Config Slot**: Select the lowest level configuration slot so as to cover all components affected by the SB.
   - **Class**: Select SB (Service Bulletin).

- **Subclass**: Select the appropriate subclass.
- **Originator**: Select SB (Service Bulletin).
- **Received By**: The default is your user name. If the SB was received by someone else, enter that person's user name.
- **Received Date**: Enter the date you received the SB.
- **Issued By**: Select MANUFACT.
- **Manufacturer**: Select the manufacturer that issued the SB.
- **Issue Date**: Enter the date that the manufacturer issued the SB.
- **Amendment Number**: Enter the SB amendment number, if applicable.
- **Applicability Description**: Enter the SB applicability/effectivity.
- **Description**: Enter a description for the SB.
- **Revision Contact**: The default is your user name. If someone else is responsible for dispositioning the SB, enter that person's user name.

3. Complete the remaining fields as required, and click **OK**.

Create a component service bulletin

About this task

Depending on the SB, you may have to perform this procedure multiple times, once for each component to which the SB applies.

Steps

1. On the **Reference Document Search** page, click **Create Reference Document**.
2. On the **Create Reference Document** page, provide the requested information, paying attention to the following fields:
   - **Reference Document Type**: Select Config Slot.
   - **Code**: Enter the SB number.
   - **Name**: Enter the SB name or subject.
   - **Assembly**: Select the applicable aircraft assembly or sub-assembly.
   - **Config Slot**: Select the lowest level tracked configuration slot to cover all of the components affected by the SB.
   - **Class**: Select SB (Service Bulletin).
   - **Subclass**: Select the appropriate subclass.
   - **Originator**: Select SB (Service Bulletin).
   - **Received By**: The default is your user name. If the SB was received by someone else, enter that person's user name.
   - **Received Date**: Enter the date you received the SB.
   - **Issued By**: Select MANUFACT.

- **Manufacturer**: Select the manufacturer that issued the SB.
- **Issue Date**: Enter the date that the manufacturer issued the SB.
- **Amendment Number**: Enter the SB amendment number, if applicable.
- **Applicability Description**: Enter the SB applicability/effectivity.
- **Description**: Enter a description for the SB.
- **Revision Contact**: The default is your user name. If someone else is responsible for dispositioning the SB, enter that person's user name.

3. Complete the remaining fields as required, and click **OK**.

Link a document as a technical reference

About this task

Technical references are hyperlinks to IETM content. You can link a physical document to a reference document as a technical reference.

Steps

1. On the **Reference Document Details** page, **Technical References** area, click ⊞. The IETM Search page opens with the buttons related to Technical References.
2. On the **IETM Search** page, click **Create Technical Reference**.
3. On the **Add Technical Reference** page, provide the required information. Note the following:
   - **Printable**: Select if the attachment is printable.

   > **Tip** To print the technical reference, it must be a link to a PDF file.

4. Click **OK**.

Add a document as an attachment

About this task

Attachments are files you can upload to a reference document.

Steps

1. On the **Reference Document Details** page, **Attachments** area, click ⊞. The IETM Search page opens with the buttons related to Attachments.
2. On the **IETM Search** page, click **Create Attachment**.
3. On the **Add Attachment** page, provide the requested information.
4. Click **OK**.

Disposition a reference document

About this task

You disposition a reference document to specify how you handled the information or instruction included in the document. Dispositioning a reference document changes its status to ACTIVE. Once active, the document cannot be edited.

Steps

1. On the **Reference Document Details** page, click **Disposition Reference Document**.
2. On the **Disposition Reference Document** page, provide the requested information and click **OK**.
3. Click **OK**.
4. If prompted, enter your password and click **OK**.

If work needs to be done on the assembly to comply with the SB, create engineering order (EO) requirement definitions and link them to the compliance reference document.

Create engineering orders for compliance

About this task

To complete the work required by an AD or SB, you create engineering order (EO) requirement definitions that contain the execution information required to comply with the SB or AD, and break down that information into several job card definitions.

Steps

1. On your to-do list, click **Create Requirement**.
2. On the **Create Requirement** page, provide the required information. Note the following:
   - **Requirement Type**: Select **Config Slot**.
   - **Identification**: Select the Assembly and Config Slot to which the troubleshooting task applies.
3. In the **Classification** area, provide the required information. Note the following:
   - **Class**: Select **MOD (Part Transformation)** or **REQ (Requirement)**.
   - **Originator**: Select **EO (Engineering Order)**.
   - **Workscope**: If execution information will be provided in job cards, select *This requirement requires a job card for execution*. If you will include all execution information in the requirement, select *This requirement will contain execution information and will not have job cards*.
4. Provide the information requested in the remaining areas of the **Create Requirement** page, and click **OK**.

   You now need to add job cards to this requirement.

5. On the **Requirement Details** page, click the **Job Cards** tab.
6. Click **Add Job Card to Requirement**.
7. On the **Add Job Card to Requirement** page, enter the complete job card definition code in the **Job Card** field, and click **Select Job Card** .
8. On the **Job Cards** tab, select the job card, and click **Add Job Card to Requirement**.

> **Note** You can associate job card definitions that are in Build or Revision status to a requirement definition. Also, you must select job card definitions that are defined for the same configuration slot aircraft system or part number as the requirement.

9. On the **Requirement Details** page, click the **Details** tab, and then click **Add Part Transformation** .
10. On the **Add Part Transformation** page, provide the following information and click **OK**.
    - **Transform From Old Part No.**: Select the part number of the inventory before the transformation work.
    - **Transform Into New Part No.**: Select the part number to assign to the inventory after the transformation work.

> **Note** The part transformation information consists of the part number of the target inventory before the transformation work, and the new part number to assign to the inventory after the transformation work. This procedure is applicable to MOD requirement task definitions only.

What's next

To create tasks based on this requirement, you must activate the task definition and job card definitions it includes. However, if you need to add more information to the requirement or to the job cards—labor requirements, instructions, part and tool requirements, and so on—do so before activating them. Once the EOs are ready, you create compliance links from the EOs to the to the appropriate compliance reference document.

Linking compliance documents

Links are used to show the relationships between engineering order (EO) requirements and airworthiness directive (AD) and service bulletin (SB) reference documents. You can link EOs to the appropriate compliance reference document using a COMPLIES link. For example, you can link the following:

- An EO to an AD.
- An EO to an SB.

Important

Do not create redundant compliance links for the same EO to more than one compliance reference document. For example, if SB_1 is linked to AD_1, and SB_1 is also linked to EO_1, do not link EO_1 to AD_1.

Do not create circular links for a compliance reference document. For example, SB_1 is linked to SB_2, SB_2 is linked to SB_3, SB_3 is linked to SB_1.

The compliance links are used to generate the compliance report in CAMO.

You can also link a reference document to another reference document, for example:

- A component SB to a related manufacturer SB.
- An SB to a related AD.
- A regulatory body's AD to another regulatory body's equivalent AD.

Link a reference document to a requirement definition

About this task

You can link a reference document to a requirement definition using a compliance link. This type of link is used to indicate that the work covered by a requirement definition is required to comply with a directive from a manufacturer, for example a service bulletin, or one from a regulatory body, such as an airworthiness directive.

Steps

1. On the **Requirement Search** page, enter the search criteria and click **Search**.
2. On the **Requirements Found** tab, click the requirement.
3. On the **Requirement Details** page, click the **Details** tab.
4. Click **Link to Tasks** .
5. On the **Add Linked Task** page, provide the following information:
   - **Link Type**: Select **COMPLIES**.
   - **Linked Task Definition**: Select the reference document.
6. Click **OK**.

Once all of the requirements are linked to the AD and SB reference documents, you can set and manage the statuses of the ADs and SBs.

Link a reference document to another reference document

About this task

You can link a reference document to another reference document. This type of link is used to identify a relationship between the two documents, for example, a service bulletin (SB) and an airworthiness directive (AD). You can also link a revision to the original compliance document.

Steps

1. On the **Reference Document Search** page, enter the search criteria and click **Search**.
2. On the **Reference Documents Found** tab, click the required reference document.
3. On the **Reference Document Details** page, click the **Details** tab.
4. Click **Link to Tasks** .
5. To link a reference document to another reference document, on the **Add Linked Task** page, provide the following information:
   - **Link Type**: Select the appropriate link type.
   - **Linked Task Definition**: Select the reference document.
6. To link a revision to the original AD or SB, on the **Add Linked Task** page, provide the following information:
   - **Link Type**: Select **COMPLIES** (Complies).
   - **Linked Task Definition**: Select the original AD or SB reference document.
7. Click **OK**.

Update compliance documents with new revisions

About this task

You must complete the following work flow when a regulatory body or manufacturer issues a revision of an airworthiness directive (AD) or service bulletin (SB).

Steps

1. Duplicate the AD or SB reference document that has a revision.
2. Edit the information in the new duplicate reference document to align with the revision issued by the regulatory body or manufacturer.
3. Remove existing technical reference links or attachments on the new duplicate reference document.
4. Add the new technical reference link or attachment for the revised AD or SB to the new duplicate reference document. Do one of the following:
   - Link a document as a technical reference.
   - Add a document as an attachment.
5. Link the duplicate reference document with the version of the document that is replaced.

6. Create links to existing EOs and SBs, or create new EOs and SBs and link them to the duplicate reference document. See **Linking compliance documents** and **Creating engineering orders for compliance**.
7. Disposition the duplicate AD or SB reference document.
8. Update the status of the duplicate AD or SB. Do one of the following:
   - Update an airworthiness directive status.
   - Update a service bulletin status.
9. Change the status of the original AD or SB to Superseded. Do one of the following:
   - Update a revised or superseded airworthiness directive status.
   - Update a revised or superseded service bulletin status.

Duplicate an airworthiness directive or service bulletin

Steps

1. On the **Reference Document Search** page, enter the search criteria and click **Search**.
2. On the **Reference Documents Found** tab, select a reference document, and click **Duplicate Reference Document**.
3. On the **Duplicate Reference Document** page update the **Task Code** to reflect the change in revision.
4. Click **OK**.

Edit an airworthiness directive or service bulletin

About this task

Update the information in the reference document as needed to reflect the changes issued in the revision by the regulatory body or manufacturer.

Steps

1. On the **Reference Document Details** page, **Identification** area, click .
2. Update the fields as required to reflect the changes in the revised AD or SB.
3. Click **OK**.

Remove a technical reference link or attachment

About this task

On the **Reference Document Details** page do the following, as applicable:

Steps

1. To remove a technical reference link:
   - In the **Technical References** area, select a reference.
   - Click ⊟ .
2. To remove an attachment:
   - In the **Attachments** area, select a document.
   - Click ⊟ .

Link a document as a technical reference

About this task

Technical references are hyperlinks to IETM content. You can link a physical document to a reference document as a technical reference.

Steps

1. On the **Reference Document Details** page, **Technical References** area, click ⊞. The IETM Search page opens with the buttons related to Technical References.
2. On the **IETM Search** page, click **Create Technical Reference**.
3. On the **Add Technical Reference** page, provide the required information. Note the following:
   - **Printable**: Select if the attachment is printable.

   > **Tip** To print the technical reference, it must be a link to a PDF file.

4. Click **OK**.

Add a document as an attachment

About this task

Attachments are files you can upload to a reference document.

Steps

1. On the **Reference Document Details** page, **Attachments** area, click ⊞. The IETM Search page opens with the buttons related to Attachments.
2. On the **IETM Search** page, click **Create Attachment**.
3. On the **Add Attachment** page, provide the requested information.
4. Click **OK**.

Link a revision to original airworthiness directive or service bulletin

About this task

Complete the following procedure from the newly created or duplicated AD or SB.

Steps

1. On the **Reference Document Details** page, Link to Tasks area, click ⊞ .
2. On the **Add Linked Task** page, provide the following information:
   - **Link Type**: Select **COMPLIES** (Complies).
   - **Linked Task Definition**: Select the original AD or SB reference document.
3. Click **OK**.

Disposition a reference document

About this task

You disposition a reference document to specify how you handled the information or instruction included in the document. Dispositioning a reference document changes its status to ACTIVE. Once active, the document cannot be edited.

Steps

1. On the **Reference Document Details** page, click **Disposition Reference Document**.
2. On the **Disposition Reference Document** page, provide the requested information and click **OK**.
3. Click **OK**.
4. If prompted, enter your password and click **OK**.

If work needs to be done on the assembly to comply with the SB, create engineering order (EO) requirement definitions and link them to the compliance reference document.

Supersede compliance documents

About this task

You must complete the following work flow when a regulatory body or manufacturer issues a supersedure to an airworthiness directive (AD) or service bulletin (SB).

Steps

1. Create a new AD or SB reference document. See *Receiving and activating airworthiness directives* and *Receiving and activating service bulletins.*

Important Do not disposition the new AD or SB until all of the links are created.

2. Link the new reference document with the version of the document that is superseded.
3. Create links to existing EOs and SBs, or create new EOs and SBs and link them to the duplicate reference document. See *Linking compliance documents* and *Creating engineering orders for compliance*.
4. Disposition the new reference document.
5. Update the status of the duplicate AD or SB. Do one of the following:
   - Update an airworthiness directive status.
   - Update a service bulletin status.
6. Change the status of the original AD or SB to Superseded. Do one of the following:
   - Update a revised or superseded airworthiness directive status.
   - Update a revised or superseded service bulletin status.

Link a revision to original airworthiness directive or service bulletin

About this task

Complete the following procedure from the newly created or duplicated AD or SB.

Steps

1. On the **Reference Document Details** page, Link to Tasks area, click ⊞ .
2. On the **Add Linked Task** page, provide the following information:
   - **Link Type**: Select **COMPLIES** (Complies).
   - **Linked Task Definition**: Select the original AD or SB reference document.
3. Click **OK**.

Disposition a reference document

About this task

You disposition a reference document to specify how you handled the information or instruction included in the document. Dispositioning a reference document changes its status to ACTIVE. Once active, the document cannot be edited.

Steps

1. On the **Reference Document Details** page, click **Disposition Reference Document**.
2. On the **Disposition Reference Document** page, provide the requested information and click **OK**.

3. Click **OK**.
4. If prompted, enter your password and click **OK**.

If work needs to be done on the assembly to comply with the SB, create engineering order (EO) requirement definitions and link them to the compliance reference document.

Update airworthiness directives with amendments

About this task

You must complete the following work flow when a regulatory body issues an amendment to an airworthiness directive (AD).

Steps

1. Create a revision of the AD reference document.
2. Edit the information in the new revision reference document to align with the issued amendment.
3. Attach or link the amended AD issued by the regulatory body to the revised reference document. Do one of the following:
   - Link a document as a technical reference.
   - Add a document as an attachment.
4. Disposition the revised AD.

Create revisions for airworthiness directives

About this task

Complete the following steps to create revisions for airworthiness directives.

Steps

1. On the **Reference Document Search** page, enter the search criteria and click **Search**.
2. On the **Reference Documents Found** tab, select a reference document, and click **Create Revision**.
3. On the **Create Revision** page enter the following information:
   - **Revision Reason**: Select **Revised** (Revised Requirements).
   - **Revision Notes**: Enter any notes as required.
4. Click **OK**.

Link a document as a technical reference

About this task

Technical references are hyperlinks to IETM content. You can link a physical document to a reference document as a technical reference.

Steps

1. On the **Reference Document Details** page, **Technical References** area, click ⊞. The IETM Search page opens with the buttons related to Technical References.
2. On the **IETM Search** page, click **Create Technical Reference**.
3. On the **Add Technical Reference** page, provide the required information. Note the following:
   - **Printable**: Select if the attachment is printable.

   > **Tip** To print the technical reference, it must be a link to a PDF file.

4. Click **OK**.

Add a document as an attachment

About this task

Attachments are files you can upload to a reference document.

Steps

1. On the **Reference Document Details** page, **Attachments** area, click ⊞. The IETM Search page opens with the buttons related to Attachments.
2. On the **IETM Search** page, click **Create Attachment**.
3. On the **Add Attachment** page, provide the requested information.
4. Click **OK**.

Disposition a reference document

About this task

You disposition a reference document to specify how you handled the information or instruction included in the document. Dispositioning a reference document changes its status to ACTIVE. Once active, the document cannot be edited.

Steps

1. On the **Reference Document Details** page, click **Disposition Reference Document**.

2. On the **Disposition Reference Document** page, provide the requested information and click **OK**.
3. Click **OK**.
4. If prompted, enter your password and click **OK**.

If work needs to be done on the assembly to comply with the SB, create engineering order (EO) requirement definitions and link them to the compliance reference document.

Monitoring AD and SB compliance status

To assess progress across your fleet, in complying with airworthiness directives (ADs) and service bulletins (SBs), you can view the compliance report.

In CAMO, ADs and SBs are modeled as reference documents (a type of task definition) with a task class of AD or SB. You can view the compliance report for a reference document or you can view all reference documents that apply to an aircraft or to another type of assembly.

In the compliance report table, all related task definitions appear in a tree view hierarchy on a single row that includes:

- The root reference document
- The requirements linked to the reference document with complies type links
- The job cards included in the requirements

For each task definition, the table shows the task class, amendment number, disposition, the compliance status, applicable configuration slot and configuration position number, as well as the barcode and date when the task was last done, and when it is due next.

The compliance status of the reference documents is based on the status of the linked requirements:

Compliance statuses

Requirement compliance status	Reference document compliance status
There is at least one OPEN requirement linked to the reference document. (The task status of the requirement might be ACTV, FORECAST, or IN WORK.)	OPEN

Requirement compliance status	Reference document compliance status
There are no open requirements. Requirements have compliance status: • COMPLETE - The last task exists and there is no next task • OBSOLETE - the task definition was obsoleted • TERMINATE - the last task was terminated • N/A - the requirement is no longer applicable to the inventory. Requirements can show a last done task link and date if the task was completed before applicability changed.	COMPLETE
All requirements have TERMINATE status	TERMINATE
All requirements have OBSOLETE status	OBSOLETE
All requirements have N/A status and are no longer applicable to the inventory. Requirements can show a last done task link and date if the task was completed before applicability changed.	N/A

View compliance report by reference document

About this task

When viewing compliance reports for reference documents, you have the following filter options:

- Operator
- Show all aircraft/assemblies
- Show aircraft or assemblies in OPEN compliance status
- Show aircraft or assemblies in COMPLETE compliance status
- Show aircraft that the reference document isn't applicable to
- Show overdue tasks

Steps

1. From your role menu, select Reference Document Search. Enter your search parameters and search.
2. Click on a reference document hyperlink.
3. On the Reference Document Details page, click **View Compliance Report**.

View compliance report for inventory

About this task

When viewing the compliance report, you have the following filtering options:

- Class of the reference document
- Reference documents that aren't applicable to the inventory
- Reference documents in Open or Complete compliance status
- Overdue tasks

If a task definition is not hyperlinked, this means the definition is for a configuration slot hole that has no installed inventory.

Steps

Go to the Inventory Details page, and click **View Compliance Report**.

Deferral references

Deferral references are used by technicians to justify deferring faults. When you create deferral references, you must consider applicability rules, follow-on requirements, related deferral references, and impacts on operations, performance, and maintenance actions.

The following list describes the deferral reference fields in detail:

Assembly Type

The assembly type to which the deferral reference applies.

Failed System

The failed system to which the deferral reference applies. You can search by system name and ATA chapter.

This field only populates the System slots for the chosen assembly. Root, Tracked, and Sub-assembly configuration slots or positions are not searched.

This field uses auto-complete functionality. For example, if you type "72-" in the Failed System field, the system configuration slot with "72-" anywhere in its name is displayed.

Number Installed

For the particular component, the total number installed or that can be installed on the aircraft. You can enter dashes (-), zeros, and positive numbers in this field.

Required for Dispatch

For the particular component, the number that must be installed and operational on the aircraft when the aircraft is dispatched. You can enter dashes (-), zeros, and positive numbers in this field.

Name

The deferral reference ID. This is typically the MEL or CDL code and name.

Description

You can enter a detailed description of when the deferral reference is used.

Status

When you create a deferral reference, the default value is Inactive. Set this value to Active when the deferral reference is ready for use.

Requires Maintenance Operations Control (MOC) Authorization

Turn this switch on if the deferral reference requires MOC authorization before the fault can be deferred. Typically, MEL faults require MOC approval of deferral references, so you'd turn this switch on for these types of references. If MOC authorization is required, technicians are prevented from job stopping and deferring faults until the deferral reference request is approved.

Turn this switch off to allow technicians to defer faults without the involvement of MOC. For example, you might want to turn this switch off for long-term deferral references that do not require MOC authorization.

Severity

This customizable list displays the different types of severities such as MEL or CDL. To see a severity type in the list, it must have at least one class associated with it in the database.

Class

The class associated with the severity type. For example, a MEL severity type might be class A, B, C, or D. (In the database, each class must have a default deadline defined).

Default Deadline

Displays the default deadline (in days) for the severity and class. For example, MEL C is 10 days.

Use Custom Deadline

Use this switch to indicate that you want to use a custom deadline for the fault deferred under the deferral reference, and then complete the associated custom deadline.

Custom Deadline

After you indicate that you want to use a custom deadline for the fault deferred under this deferral reference, you can enter the custom deadline in Days, Flight Hours, and/or Cycles. You must specify at least one deadline type.

You can use a zero (0) or a positive integer for days or cycles. For flight hours, you can use a zero (0) or a fractional value up to two decimal places.

Conflicting Deferral References

List all the deferral references configured that are in conflict if this deferral reference is selected.

Associated Deferral References

List of all the deferral references configured that are associated with this deferral reference.

Operators

The operators to which the deferral reference applies.

Applicability Range

The applicability range to which the deferral reference applies. The same fault on different aircraft might require different references. When technicians select deferral references, they only see references in the selection list that are applicable to the aircraft that has the fault they want to defer.

Recurring Inspections

List the recurring inspections that must take place after a fault is deferred using the deferral reference. Recurring inspections are requirement definitions that should have the FOLLOW class. This class ensures that CAMO automatically initializes the follow-on requirements when the fault is deferred, even if the requirement must be initialized for more than one fault on the aircraft at the same time. If you choose another class of requirement (such as REQ), only one instance of the requirement can be initialized against an aircraft at a time.

While editing a deferral reference, a dashed red line surrounding a recurring task definition indicates that the task definition is obsolete. While viewing a deferral reference, obsolete task definitions are identified with red text.

Note: The applicability of the Recurring Task definition must match the applicability of the deferral reference.

Subtasks

List the subtasks that need to be tracked for the deferral reference. These could be pieces of work listed in the AMM, or reviews and approvals by different groups.

Note: Subtasks are listed only if they have already been set up in CAMO. For more information, see the *Maintenix Administration Guide*.

Operational Restrictions

List the operational restrictions that result from this deferral reference.

Maintenance Actions

List all the maintenance actions that must take place in order to assign this deferral reference.

Performance Penalties

List the performance penalties on the aircraft when this deferral reference is selected.

Capabilities

Identify downgrades to aircraft capabilities due to invoking the deferral reference. For example, invoking the deferral reference could reduce ETOPS 120 to 90 or it could downgrade the Wi-Fi capabilities of the aircraft.

Related concepts

Task applicability

Follow-on tasks

Fault deferral workflow

Engineers create deferral references that are used in the fault deferral workflow. After you create deferral references and they are loaded into CAMO, the fault deferral process begins with the maintenance technician selecting a reference to defer a fault.

The fault deferral workflow is as follows:

- Technician selects a deferral reference and reviews decision support information.
- If a reference is not in the system, the technician must enter the reference manually. In this case, after the fault is deferred, follow-on tasks must be manually initiated.
- If the selected reference requires MOC authorization, an authorization request is displayed on a MOC's Pending Reference Approvals list.
- MOC reviews the selected reference and checks for potential impacts against the aircraft's schedule or other operating constraints. If an alternative reference is more appropriate, the controller can change the deferral reference before approving the request. To conclude the review, the controller does one of the following:
  - Approves the request, which generates an authorization number.
  - Rejects the request, so that the fault remains open in the work package.
- After maintenance control approves use of a reference to defer a fault, if the DEFER_ON_APPROVAL configuration parameter is true, CAMO defers the fault. Otherwise, when the technician sees that the deferral reference is approved, he or she completes the deferral process.
- Technicians can monitor the status of reference authorization requests on the following pages:
  - Work Package Details page, Workscope tab.
  - Fault Details page, Fault Information tab.
- If the deferral reference is approved for use or if it didn't require authorization, the technician defers the fault by doing a job stop, recording any maintenance actions, and electronically signing the deferral. When deferring a fault, technicians cannot click Finish on the Work Capture page. (If the DEFER_ON_APPROVAL configuration parameter is true then the fault is already deferred and technicians do not job stop to defer the fault.)

After a fault is deferred, CAMO does the following:

- Removes the fault from the work package. It can be assigned to a later work package.
- Initiates applicable recurring inspections if a deferral reference was used and the reference included follow-on recurring inspections. In rare situations, CAMO cannot initiate follow-on tasks, so displays a warning that follow-on tasks must be manually initiated. This can happen if the follow-on task is not a FOLLOW type requirement and the same requirement is already initialized for another fault on the same aircraft.
- On the Fault Details Page > Fault Information tab > Selected Reference area, removes information about the reference used to defer the fault because it is no longer the currently selected reference. The deferral reference and MOC authorization number are displayed on the Fault Information tab > Fault Details area. When deferral references are approved for use by MOC, CAMO adds a note with the reference name and authorization number to the fault history.

Search for a deferral reference

About this task

You can search for deferral references using the name of the deferral reference. An inactive deferral reference appears dimmed in your search results.

Steps

1. Do one of the following:
   - On your to-do list, click the **Deferral Reference Search** button.
   - Navigate to the **Deferral Reference Search** menu-item from your appropriate menu.
2. (Optional) If you want to search for only legacy deferral references (deferral references without a Failed System value), select the **Only show deferral references that are incomplete** check box.
3. On the **Enter a deferral reference** text box of the **Search for Deferral Reference** page, start typing the first few characters of the deferral reference name and then click the deferral reference from the list that appears.

Create a deferral reference

You can create deferral references that are used by technicians to defer faults. The default status of a deferral reference is Inactive. Before technicians can use the reference, you must set the status to Active.

Steps

1. Do one of the following:
   - On your to-do list, click the **Deferral Reference Search** button.
   - Navigate to the **Deferral Reference Search** menu-item from your appropriate menu.

2. Click **Create New**.
3. Provide the required information. Note the following:
   - **Assembly Type:** Select the assembly type to which the deferral reference applies.
   - **Status**: When the deferral reference is ready for use, select the Active status.
   - **Severity**: If a severity type that you expect to see is not listed, verify in the database that the severity type has a least one corresponding Class associated with it.
   - The **Conflicting Deferral References** and **Associated Deferral References** fields populate with all current deferral references associated with the assembly.
   - **Requires MOC Authorization:** For faults that do not require MOC authorization, turn this switch off.
   - **Recurring Inspections:** To link a recurring task, or tasks, to the deferral reference, in the **Recurring Inspections** area, start typing the code, and then click the task you want to add. Note that the linked recurring inspection must be ACTV, recurring, on-condition and on the same assembly as the deferral reference.
   - **Subtasks:** Find suitable subtasks and link to the fault. If the ALLOW_REQ_CORRECTIVE_ACTIONS configuration parameter is FALSE, the subtasks must be task definitions of task class mode JIC that are active and on the same assembly as the deferral reference. If the ALLOW_REQ_CORRECTIVE_ACTIONS configuration parameter is TRUE, the subtasks must be task definitions of task class mode JIC that are active and on the same assembly as the deferral reference, or of task class mode REQ that are active, not in a maintenance program, on-condition, and on the same assembly as the deferral reference.
4. Click **Save** to create the deferral reference, or click **Reset** to clear the form.

Edit a deferral reference

About this task

Airworthiness directives, engineering orders, error correction, and so forth, may require you to edit existing deferral references. In addition, you can also edit a deferral reference to change the status from Active to Inactive. Active deferral references can be used by CAMO users.

Steps

1. Search for the deferral reference.
2. Click **Edit**.
3. Edit the page as required and click **Save**.

> **Note** A dashed red line around a recurring task indicates that the task is obsolete.

Related tasks

Search for a deferral reference

Mark a deferral reference as inactive

You cannot delete a deferral reference, but you can mark it as inactive. If an error was made when the deferral reference was created, for example, a typo in the title, you can mark the deferral reference as inactive.

Steps

1. Search for the deferral reference.
2. Click **Edit**.
3. From the **Status** list, click **Inactive**.
4. Click **Save**.

Related tasks

Search for a deferral reference

Repair management

Engineers create requirements that are used to repair faults and to manage ongoing maintenance related to repaired faults.

Maintenance organizations use the terms *non-routine*, *finding*, and *discrepancy* to describe the discovery of a problem. These problems might be found at different times:

- During inspections.
- By the flight crew.
- While other repairs are being performed.

CAMO uses the term *fault* as a synonym of these terms. While faults are not necessarily expected, many of them are known problems that are encountered frequently within a fleet. As maintenance technicians or inspectors find problems, or receive logbook entries from the flight crew, they must raise them in CAMO as faults, so that the problem can be monitored and resolved.

To resolve a fault, a technician performs a *repair*. CAMO allows engineers to define repair procedures, including the various follow-on inspections and/or permanent repairs that will be required. These repairs can be used for both one-time repairs such as an EA (Engineering Authorization), or for frequently used repairs such as those found in the SRM (Structural Repair Manual).

To ensure that follow-on tasks are kicked off after a repair is complete, use the following workflow:

1. Create a repair reference requirement (REPREF) for a configuration slot.

2. Create a requirement with the FOLLOW class for the same assembly or for a tracked sub-assembly.
3. Return to the repair reference. On its Scheduling tab, add one or more Following Tasks. These follow-on tasks have the CRT (Create New) Action on Completion.

When a technician works on a fault with a REPREF selected, if the REPREF links to follow-on tasks, these are displayed when work is captured. When the repair is completed, the specified follow-on tasks are initialized.

For faults that occur frequently, engineers can create non-routine baselines, known as a *fault definitions*. These fault definitions contain the proper labeling and categorization, as well as links to relevant troubleshooting and corrective actions.

Finally, in integrated systems that use CAMO and the Diagnostics API, possible faults can be detected by systems on the aircraft and raised automatically in CAMO so that they are reviewed and addressed by maintenance personnel.

Repair references

Repair references are defined by engineering and are used to represent any form of repair that can be carried out by a technician.

Repair references are used to model one-time repairs such as EAs (Engineering Authorizations) as well as re-usable repairs such as those found in the SRM (Structural Repair Manual) or re-usable EAs. Repair references are setup as follows:

- Repair references are a type of requirement.
- They must have a requirement Class of REPREF.
- They usually have a requirement Subclass, which is used to define the type of repair such as EA or SRM. The sub-class is not required to create the requirement, but it is required to allow technicians to filter by type when they select references.
- They can only be defined against a configuration slot, not against a part number.
- When you select the REPREF class on the Create Requirement page, the Config Slot radio button is selected automatically and the Part Number radio button is disabled.
- They must be set up as executable requirements, and cannot have job cards. When you select the REPREF class on the Create Requirement page, the radio button is selected automatically. The radio button is disabled.
- They are always on-condition. When you select the REPREF class on the Create Requirement page, the On Condition check box is selected and cannot be unselected.
- They are always marked as Prevent Manual Initialization, meaning that they cannot be initialized as tasks. Instead, they are always selected in context of a fault using the Select Reference button. The Allow Manual Initialization button is not available for these requirements.
- They cannot be created or canceled upon installation or removal. When you select the REPREF class on the Create Requirement page, the Create/Cancel on Install and Create/

Cancel on Removal list boxes are set to Do Nothing on Install/Removal and hidden from the page.

- They cannot be assigned to blocks or maintenance programs.
- They can have Following Task links to follow-on inspections or replacement repairs. Unlike follow-on tasks for other classes of requirements, follow-on tasks for REPREF requirements can be created against sub-assemblies of the assembly that was repaired. For example, the REPREF might be on an aircraft (SYS config slot), but the follow-on task can be on a TRK component of the sub-assembly such as a door, panel, fairing, control surface, etc. When adding following tasks to REPREF requirements, you can select only FOLLOW class tasks with a CRT (Create New) Action on Completion. After a repair associated with a REPREF reference is completed, only FOLLOW class tasks are initialized.

Steps and labor on repair references

Steps and labor that engineers add to repair references, are copied to faults when technicians select repair references or, if the selected reference requires MOC authorization, the information is copied to the fault when the reference is approved. Technicians and inspectors then sign off on their skills in labor rows and steps when they record work done to repair the fault.

When CAMO copies information from the repair reference to the fault, the steps are appended to the fault. A fault can show a combination of ad hoc steps and steps from one or more repair references. A step in a reference that doesn't apply to the inventory item is copied to the fault, but marked as not applicable when the work package that contains the fault is committed. For example, if there are two steps, one for an engine with a 27k thrust rating and another for a 24k thrust rating, one of the steps is not applicable and is marked N/A.

Labor rows from the repair reference are either added to the fault as additional rows or they replace existing rows with the same skill, depending on the status of the labor rows.

Related concepts

Repairing faults

Repair reference attributes

In addition to the standard requirement attributes like Originator and Task Priority, a repair reference has additional attributes. You can view or edit them from the **Requirement Details** page, **Details** tab, **Repair Reference Details** area.

- **MOC Authorization Required**: Select this check box if technicians must request and receive MOC Authorization before a fault can be closed with the repair. If selected, CAMO prevents repairs from being completed without MOC approval. By default, the check box is unselected.
- **Damage Record Required**: Select this check box if technicians must provide a damage record, such as for a structural repair. If selected, CAMO prevents repairs from being completed when damage records are not provided.

- **Damaged Component Required**: Select this check box if a damaged component must be specified for the repair. This is used for repairs that have follow-on tasks that are applicable to removable components or surfaces (doors, panels, radome, etc.). If selected, CAMO prevents repairs from being completed if a technician has not recorded a damaged component on the damage record, ensuring that the follow-on tasks get created properly. This check box is only visible if **Damage Record Required** is selected.
- **Operational Restrictions**: Enter any operational restrictions that must be applied to the aircraft based on the type of repair being applied to a fault.
- **Performance Penalties**: Enter any performance penalties that must be applied to the aircraft because of the unresolved faults.

Create repair reference requirement definitions

You create repair reference requirement definitions so that technicians can perform their work and sign off their faults using that repair reference.

Steps

1. On your to-do list, click **Create Requirement**.

   You can also find this button if you do a search for existing requirement definitions.
2. In the **Classification** area, provide the required information. Note the following:
   - **Class**: Select **REPREF (Repair Reference)**.
3. Provide the information requested in the remaining areas of the **Create Requirement** page, and click **OK**.

What's next

Once the repair reference requirement definition is created, you can modify its attributes from the Requirement Details page. You can add follow-on tasks that are initialized when the repair is completed. You do this on the **Scheduling** tab in the **Following Tasks** area. You must activate the requirement before it can be used.

Follow-on tasks

Follow-on tasks handle the scheduling and planning of tasks, such as recurring inspections or replacement repairs, which are initiated from fault deferrals and repairs.

Follow-on tasks are set up as follows:

- Follow-on tasks are a type of requirement.
- They must have a requirement class of FOLLOW.
- They can only be defined against a configuration slot, not against a part number. When you select the FOLLOW class on the Create Requirement page, the Config Slot radio button is selected automatically and the Part Number radio button is disabled.

- They are always on-condition. When you select the FOLLOW class on the Create Requirement page, the On Condition check box is selected and cannot be cleared.
- They cannot be created or canceled upon installation or removal. When you select the FOLLOW class on the Create Requirement page, the Create/Cancel on Install and Create/Cancel on Removal list boxes are set to Do Nothing on Install/Removal and hidden from the page.
- They cannot be assigned to blocks or maintenance programs.

Follow-on tasks should be linked from the Repair References using Following Task links, or from Deferral References using Recurring Inspection links.

Duplicate follow-on tasks for multiple faults

CAMO allows creation of multiple copies of active tasks, provided the task class is FOLLOW. This means that multiple faults will trigger the same follow-on tasks, or multiple faults on the same inventory will have links to copies of tasks that are based on the same task definition.

This is illustrated in the diagram below with two follow-on tasks 1 and 2 created and active in relation to different faults.

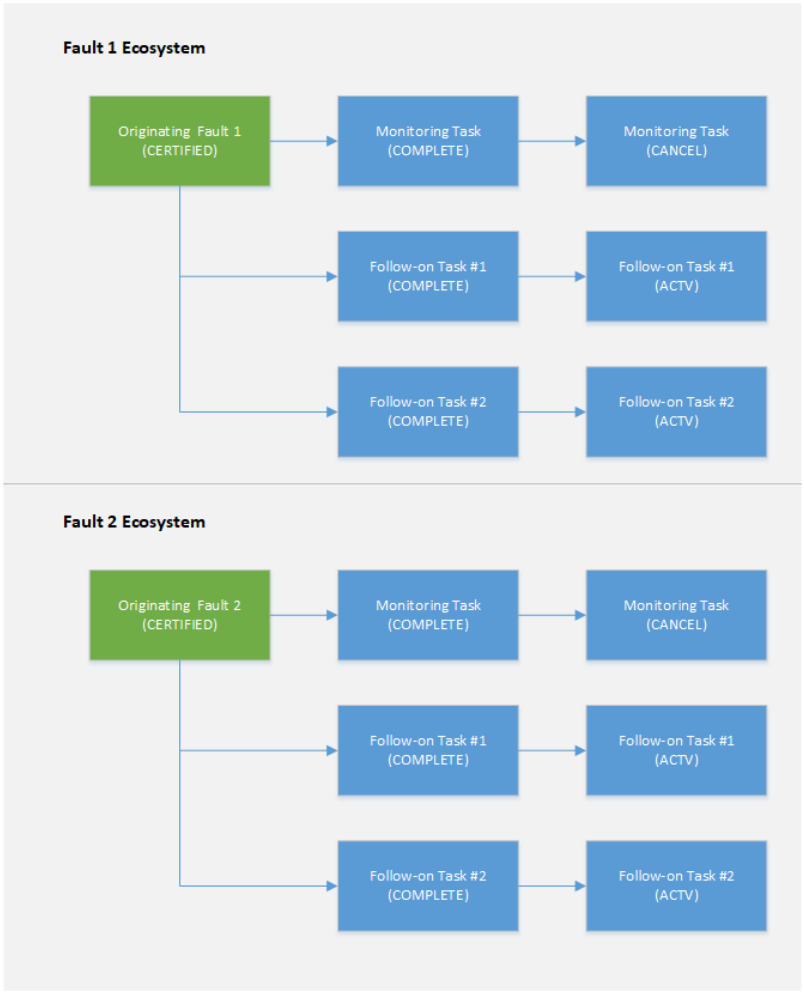

To support this, if there are TERMINATE or COMPLETE links between tasks in the same fault ecosystem, the link will only TERMINATE or COMPLETE the tasks in the same ecosystem. It will not affect tasks that are in a different ecosystem.

However, if multiple actual tasks have been created against a single inventory item, and they have TERMINATE or COMPLETE links, and they are not related to a fault, the TERMINATE and COMPLETE links will terminate or complete all of the tasks that are not related to a fault.

Handling duplicate follow-on tasks

A duplicate task is one that is based on the same revision of the same definition as another task in the same work package.

Normally, duplicates are found on the job card level, but multiple follow-on requirements can be created, allowing a work package to contain multiple copies of the same follow-on requirement. If the follow-on requirement is defined as a non-executable requirement, the task suppression doesn't apply, as suppression only applies to executable tasks. But even when the follow-on

requirement is defined as an executable requirement, the requirement will not be suppressed when two or more are put into the same work package.

Create follow-on requirement definitions

You create follow-on requirements using the class FOLLOW.

Steps

1. On your to-do list, click **Create Requirement**.
2. On the **Create Requirement** page, provide the required information. Note the following:
   - In the **Requirement Type** area, select **Config Slot**.
3. In the **Classification** area, provide the required information. Note the following:
   - **Class**: Select **FOLLOW (Follow-on Task)**.
4. In the **Scheduling Details** area, provide the required information. Note the following:
   - **Recurring**: Select this check box to allow tasks based on this requirement to be repeated at regular intervals.
   - **Schedule From**: Select whether CAMO is to schedule the requirement starting from the manufactured date of the inventory, the received date of the inventory, or from an effective date. If you select effective date, specify the **Effective From Date**.
   - **Reschedule From**: Select date from which to schedule occurrences of tasks based on this requirement.
     - The date when the previous occurrence of the task is completed on the same inventory item (EXECUTE).
     - The start date of the work package in which the previous occurrence of the task is packaged (WPSTART).
     - The completion date of the work package in which the previous occurrence of the task is packaged (WPEND).
   - **Use Manufactured Date if Later**: This check box is visible only for task definitions that are scheduled from the effective date. Select it if you want CAMO to schedule the tasks based on the manufactured date for inventory that is manufactured after the specified effective date.
   - **If this task is created from a different task**: Select the appropriate radio button according to the scheduling rule you want to apply to following tasks. The selected value will be ignored for all tasks other than or those based on follow-on requirements or created using CRT or POSTCRT links.
   - **Schedule to Latest Deadline**: If the requirement has multiple deadlines, you can select this check box to have CAMO schedule the requirement to the latest of the deadlines.
   - **Soft Deadline**: Select this check box if the deadline of the tasks based on this requirement can be exceeded without making the tasks overdue in CAMO.

- **Allow Manual Scheduling**: Select this check box to allow authorized users to edit the scheduling interval manually on tasks based on this requirement definition, therefore change the tasks due date.
- **Min Forecast Range**: Enter the number of days into the future. CAMO should forecast tasks based on this requirement. Based on the scheduling interval provided, CAMO initializes tasks that are due within their forecast range.

In the **Planning Details** area, the **On Condition** check box is always checked and disabled for follow-on requirements.

5. Provide the information requested in the remaining areas of the **Create Requirement** page, and click **OK**.

What's next

Once the follow-on requirement is created, you need to set up scheduling rules for the requirement, activate it and then initialize it to create tasks based on the follow-on requirement definition.

Create follow-on tasks manually

Follow-on tasks can be initiated as a result of completing a repair, but other follow-on tasks are not created until some time after a repair is complete. If a repair is already completed, you can create follow-on tasks manually.

About this task

Follow-on tasks are always based on requirement definitions of class FOLLOW created against the same assembly or against a sub-assembly.

Steps

1. Navigate to the details page of the completed fault.
2. Click **Create Follow-on Task**.
3. Start typing the first few characters of the name, code, or, configuration slot code of the follow-on task definition, then click the required task definition from the list that appears.
4. Click **OK**.

The follow-on tasks for the fault are created and listed in the Follow-on Tasks table.

Fault definitions

Fault definitions, much like other types of task definitions, are reusable templates that describe common and frequently encountered faults and provide information for solving the problem. Maintenance personnel who encounter a problem can raise a fault using a fault definition.

Also, fault definitions are used to create possible faults automatically through the Diagnostics API; this is achieved through the use of failure effects, which are symptoms of problems that are reported by systems on-board an aircraft.

Every fault definition can be associated with one troubleshooting requirement definition. The troubleshooting requirement definition must have a class of CORR (Corrective Action) and a status of ACTV or BUILD. When a fault is raised from a fault definition, the associated troubleshooting requirement is automatically initialized in CAMO. To provide all possible corrective actions to attempt to solve the fault, you create job card definition subtasks in the troubleshooting requirement.

You can associate each fault definition to other task definitions during which it is possible to encounter the problem covered by the fault definition, for example, an inspection job card. These are referred to as the *initiating task definitions*. When finding a fault during the execution of a task (the inspection), the technician can search in CAMO for fault definitions associated with the task, which saves time.

The following diagram depicts the relationships between initiating task definitions, failure effects, fault definitions, troubleshooting tasks, and possible corrective actions.

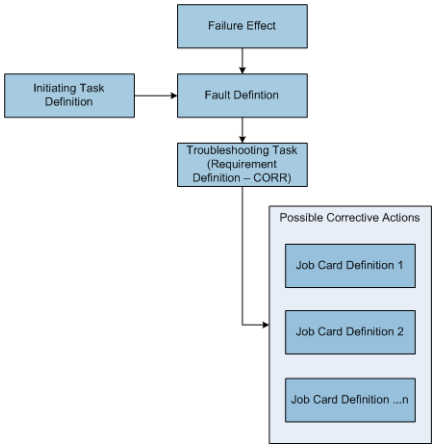

Fault Definition Model

Other attributes you can specify in fault definitions include the severity, failure category, failure type, priority, description and operational restrictions. Depending on the severity of a fault, you might also be able to specify a deferral class, which is the type of deferral, and a deferral reference. Deferral references are deferral authorization numbers, usually obtained from maintenance control. CAMO provides preset values for these attributes; your CAMO administrator can add more values if necessary.

Unlike other types of task definitions, fault definitions do not have a life cycle—they do not go through the Build, Active, In Revision, Superseded, and Obsolete statuses. If a fault definition is no longer applicable, and you do not want the technicians to reference this fault definition when logging new faults, you can delete the fault definition if it has not been used already, or update the

name of the fault definition to indicate that it should not be used, for example, by adding a prefix such as OBSOLETE or DO NOT USE for those that have been referenced.

The following are the benefits of using fault definitions:

- Less data entry for technicians because fault properties are automatically populated in CAMO based on the fault definition.
- More timely and appropriate fault resolution because information is provided in the fault definition, such as the parts, tools, work instructions, labor skills, and Minimum Equipment List (MEL) details, as well as troubleshooting and corrective actions.
- Improved reliability analysis by standardizing the recording of the faults, which results in historical consistent data.

Fault Severity

The *fault severity* indicates how critical a fault is. The severity of a fault determines whether users can defer the fault or of they have to leave it open; some severity values allow users to defer a fault, as long as they supply a deadline for the fault resolution, while other severity values do not require a deadline.

CAMO uses the severity of the most severe open fault to calculate the aircraft operating status. The default severity values range from minor to AOG, and have the following implications:

Fault Severity

Severity code	Description	Aircraft status	Can defer fault?
MINOR	The fault has no operational impact.	No change.	Yes; no deadline.
MEL	The failure is MEL related.	MEL no restriction.	Yes with deadline.
MINR-WD	The fault has no operational impact.	MEL	Yes with deadline
MINR-WND	The fault has no operational impact.	No change	Yes; no deadline
CDL	Configuration deviation list fault.	MEL	Yes with deadline
CDL-WND	Configuration deviation list fault.	No change	Yes; no deadline

Severity code	Description	Aircraft status	Can defer fault?
AOG	The fault is severe enough to ground the aircraft.	AOG	No
UNKNOWN	Unknown severity.	OPEN	No

Fault Priority

Each fault definition has an associated priority which is used to indicate to a technician the importance of a fault diagnosis.

When defining a fault definition, several factors are considered to determine the fault definition's priority. For example, part cost, flight delay, and operational impacts all contribute to the priority of the fault definition.

Every fault definition has a priority reference term associated with it. Since fault diagnosis is used when raising faults, this priority tells a technician how important or likely a particular fault diagnosis is (as defined by the reliability experts). You can edit the priority of a fault definition.

Create fault definitions

Prerequisite

- You know the assembly and configuration slot to which the fault definition relates.
- If you want to associate a troubleshooting requirement definition as you create the fault definition, the troubleshooting requirement already exists in CAMO.

About this task

Create fault definitions for frequently encountered faults to reduce the amount of data entry required, and to provide relevant and consistent troubleshooting and corrective action information each time the problem occurs. Fault definitions can be created only for configuration slots, not for part numbers.

Steps

1. On your to-do list, **Assembly List** tab, click an assembly.
2. On the **Assembly Details** page, click the **Config Slot** tab.
3. Click the link of the configuration slot for which you are creating the fault definition.
4. On the **Config Slot Details** page, click the **Fault Definition** tab.
5. Click **Create Fault Definition**.
6. On the **Create Fault Definition** page, in the **Identification** area, provide the information requested.

7. In the **Classification** area, provide the required information. Note the following:
   - **Severity**: Select how critical the fault is. Some severity levels make it impossible to defer a fault, others make it possible as long as users specify a deadline, and others let user defer faults without specifying deadlines. Depending on the severity level you select, you might have to specify a Deferral References and a Deferral Class. Note that the list of Deferral References is limited to legacy Deferral References only.
   - **Manually Raised**: Select this check box if the fault is one that is raised manually by users. Do not select if the fault definition is to be used by the integration of CAMO with on-board diagnostics systems, which can automatically raise possible faults when specific symptoms are encountered.
   - **Troubleshooting Task**: Select the troubleshooting requirement definition to associate with the fault definition, if one exists. You can assign a troubleshooting task to the fault definition at a later time.

   > **Note** The selected troubleshooting requirement definition must have a class of CORR (Corrective Action) and a status of ACTV or BUILD.

8. In the remaining areas, provide the information requested, and click **OK**.

   Now you can assign a troubleshooting requirement to the fault definition. Each fault definition can have only one troubleshooting requirement definition assigned to it.
9. On the **Fault Definition Details** page, click the **Details** tab.
10. Click **Edit Fault Definition** .
11. On the **Edit Fault Definition** page, in the **Classification** area, click **Select Troubleshooting Task** .
12. On the **Select Task Definition** page, select the applicable troubleshooting task definition.
13. On the **Edit Fault Definition** page, click **OK**.

Troubleshooting tasks and corrective actions

A troubleshooting task provides technicians with information on how to assess a fault and find the most appropriate corrective action to address it. Technicians also use the task to record the work they do to troubleshoot the task. A troubleshooting task is automatically initialized when a fault is raised. When the fault is raised from a fault definition, the troubleshooting task can be based on a requirement definition of class CORR and status of ACTV or BUILD, if one is associated with the fault definition.

A fault definition can only have one troubleshooting task definition associated with it. However, the same troubleshooting task definition can be associated with several fault definitions. For faults that are raised in an ad hoc fashion—not from a fault definition—the troubleshooting task is a generic empty task linked to the fault.

The possible corrective actions to resolve the fault are job card definitions that are associated with the troubleshooting task. The corrective tasks are often extracted from the OEM's troubleshooting manual or standard repair manuals. The job card definitions must be on the same configuration slot as the troubleshooting task definition they relate to.

When a fault is raised from a fault definition, its troubleshooting task is automatically initialized, but not the possible corrective actions, because it is possible that the technician will not have to execute all of them, but rather a single one or a subset. The technician must initialize corrective actions manually, as needed, after the fault has been investigated. Often, the technician initializes only one or a subset of the corrective actions. Also, technicians can create additional corrective action tasks within a troubleshooting task, by selecting an existing task definition, or creating an ad hoc task.

As part of using a fault definition, and its associated troubleshooting task and corrective actions, the technician can, and should identify in CAMO the corrective action that was successful. When a similar fault is raised in the future, the success rates for each corrective action across the fleet and for the assembly is available to the technician.

The job card definitions for corrective actions can be used as a regular maintenance task outside the context of a fault.

Failure effects and possible faults

Failure effects represent the symptoms of a problem observed during flight. Failure effects can be recorded by an aircraft's on-board systems, or other diagnostics systems, and then input to CAMO using the Maintenix Diagnostics API. Failure effects cannot be recorded in CAMO through the user interface. For more information about the Diagnostics API, see the *Maintenix Diagnostics API Guide*.

In CAMO, you record a list of all possible failure effects for an assembly. You can then assign any of the failure effects to any fault definition you create for that assembly. The failure effects assigned to a fault definition represent the symptoms that would indicate that the associated fault has occurred. When an aircraft experiences a set of failures matching those in a fault definition, a possible fault is automatically created in CAMO. The following is an example of failure effects assigned to a fault definition:

- Fault definition: Failed battery
  - Failure effect A: Visible corrosion on battery.
  - Failure effect B: Cracked battery casing

In this example, visible corrosion and a cracked casing are the two symptoms that define a failed battery.

When CAMO receives failure effects from an aircraft during flight, it presents maintenance personnel with a possible fault. These faults are created in the database automatically. Execution

personnel review and evaluate the possible faults, and they can accept or reject the CAMO diagnosis of a problem.

Each failure effect has a code, a name, a severity and a type. The code of a failure effect must match the code used by the external diagnostics system. The failure effect severity is distinct from the severity of a fault definition; this severity value indicates the criticality of each individual failure effect. The type is a categorization of the failure effect. CAMO includes preset severity and type values, but your CAMO administrator can add more values if needed.

Records management

Accurate technical records keeping is essential to providing audit trails for tracking compliance, planning maintenance activities, and analyzing the operation of the maintenance organization.

Technical records include the condition and usage of assets, and the maintenance work performed on assets including the removal and installation of components.

Most record keeping occurs as a normal by-product of using CAMO, as personnel in various organizations perform actions, enter data, and modify data in CAMO. For example, engineering personnel record new maintenance directives and their applicability to specific tail numbers, and maintenance personnel record the work they perform and the parts they remove and install.

In addition to the normal day-to-day record keeping performed by personnel throughout the organization, technical records personnel are called on to record information for some activities. These activities include entering technical records for newly acquired aircraft and components, and responding to record discrepancies or problems encountered by other maintenance personnel.

Recording flights

Flight records help you keep aircraft inventory records accurate by recording the aircraft usage accrued, and the movement of aircraft from airport to airport. Flights are often created automatically in CAMO through integration with external systems using the Flight API. You can also record flights on aircraft inventory manually.

You can record the most recent flight, edit historical flights, or if required, you can create a record for a flight that occurred before the most recent. Based on the flight dates that you enter, CAMO adds the flight to the flight history in the appropriate sequence. If there are following flights already recorded, CAMO updates their accrued usage values.

Flight records include the following general information used for tracking purposes:

- Flight name and master flight number: The flight name is mandatory. The master flight number is optional and is used to indicate that this is one leg in a multi-leg flight.

Note You can assign each flight in CAMO to a master flight. The master flight number (a text value that can have numbers or letters) is recorded on the Flight Details page. If there is a master flight number recorded for a flight, clicking the master flight number takes you to the Master Flight Details page. The Master Flight Details page displays a list of all flights with that master flight number. The flights are listed according to whether or not they are historical. Summary information is provided, and you can click the hyperlink to go to the Flight Details page for each flight listed on the Master Flight Details page.

- Operation type: The operation type categorizes the flight according to its operational purpose. For example, is it revenue-generating, a ferry flight, or a test flight?
- Flight reason: The reason for the flight.
- Log reference: The log reference provides a link to the flight's entry in the flight log-book.
- Departure and arrival details: The actual departure and arrival locations and dates and possibly the scheduled departure and arrival dates.
  - The actual departure date is the date and time that the aircraft leaves the gate. The actual arrival date is the date and time that the aircraft arrives at the gate. These dates determine the where a flight record is added in the flight sequence for the aircraft and are used to calculate usage accrued during the flight.
  - The up and down dates record when weight is off the wheels at take-off and when weight is on the wheels at landing. These dates are used to automatically calculate usage accrued during the flight.

When you create a flight, the up and down dates are optional, but if you leave them blank, CAMO populates these fields with the values entered for the actual arrival and departure dates.

Related concepts

Ways to record usage

Life cycle of a flight

Flight legs in CAMO have a state property that describes the current status of a flight leg within its life cycle. For example, the initial status for a flight leg is PLAN, but once it leaves the gate, its status changes to OUT.

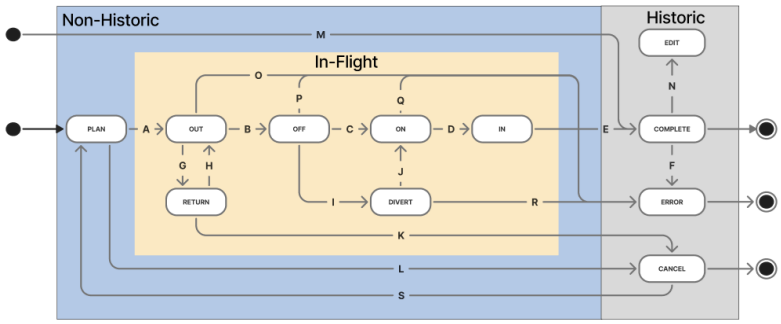

Life cycle of a flight

The following table describes each flight status.

Status	Description
PLAN	The initial state for a planned flight leg. This is where locations, dates and initial tail assignments are recorded for a new flight leg in CAMO. If a flight leg is canceled, it could return to this state.
OUT	A flight leg enters this state once it pushes out from the gate onto the runway. At this point, the tail cannot be reassigned, and departure information is fixed.
OFF	This state is defined by weight off wheels for the aircraft, or when the aircraft has taken off.
ON	This state is defined by weight on wheels for the aircraft, or when the aircraft lands on the runway.
IN	A flight leg enters this state when it pulls up to the arrival gate. **Note** This is a very temporary state. Once the aircraft pulls up to the gate, the state will change to IN and then immediately change to COMPLETE.
RETURN	This state occurs when the aircraft returns from the runway to the gate. This would normally occur for maintenance reasons when the aircraft fails a safety check while on the runway and must return to the gate.
DIVERT	This state occurs when the flight leg is air-born, and the aircraft cannot land at the original destination. Once a new destination is assigned to the flight leg, it enters a DIVERT state to warn the ground crew at the new location that an unexpected flight leg is set to land.

Status	Description
COMPLETE	This state signifies that the flight leg record is now up to date in the system, and the flight leg usage has been applied to the aircraft inventory.
EDIT	This state indicates that the flight leg record that was once marked as COMPLETE needed a change and has now been updated. The flight status will now remain as EDIT.
ERROR	Once a flight leg has been completed, if it is deemed to be incorrect for any reason, the flight leg can be marked as in error, which will update the flight leg record in CAMO accordingly, and remove the usage accrued on the aircraft's current configuration. A flight leg could also be marked as in error when its status is OUT, OFF, ON or DIVERT.
CANCEL	While a flight leg is in a planned state, it can be canceled to remove it from the flight leg plan, to indicate that the flight leg will no longer occur.

Flight API

Although you can use the CAMO pages to create or update flight records in your system, the most common and effective way to manage flight records is through the Maintenix Flight API.

CAMO Application Programming Interfaces (APIs) support logical integration between CAMO and external business applications.

Flight APIs are used to integrate to Flight Following Systems. Flight APIs relay flight planning, flight tracking, and aircraft usage information to CAMO, and notify flight operations of significant maintenance activities. You can use Flight APIs for:

- Loading flight information from external systems
- Notifying external systems of significant maintenance activities

Flight APIs are the only way to load planned flights into CAMO. Planned flight information is used by planners to schedule maintenance and is viewed on the **Inventory Details** > **Open** > **Open Flights** tab for an aircraft. Planned flights are typically completed through flight APIs, but if there is a disruption in relaying a Flight API message, technical records users can complete flights in the CAMO user interface.

Flight APIs simplify the task of integration through messaging scenarios used by the external systems to interact with CAMO and exchange information. For more details, see the *Maintenix Flight API Guide*.

Related tasks

Complete flights

Flight measurement parameters

CAMO can record a configurable list of measurements against a flight. This feature allows you to record values such as number of passengers, takeoff weight, and oil consumption. When a flight is created, all measurements assigned to the assemblies that were flown (like the aircraft and engines) are listed on the flight record. These measurements are always optional. You can record any or all of the measurements for each flight. Measurements are also editable on historical flights.

Measurement parameters are stored in a global list of parameters, and you can create as many as you need. You can assign them to assemblies, so that the values are recorded for every flight completed by matching inventory.

Measurements can be collected for informational and reporting purposes. For example, you may want to record certain characteristics for every flight an aircraft completes.

When you create a measurement parameter, you give it a name and code, and specify the following:

- Domain Type: Specifies how the measurement value is recorded into the flight records in CAMO (a drop-down list box, a check box, a date, some free form text, or a numeric value).
- For measurement parameters where the technician enters a numeric value representing a measurement or a quantity, you also set the following:
  - Engineering unit: the unit of measurement in which the finding is recorded.
  - Precision: the number of decimals that are stored for the measurement. Although the precision only affects numeric measurements, a precision value must be specified for all measurements.

The following table describes the domain types you can choose from:

Domain Type	Description
CH (Characteristic)	The technician records the measurement by selecting the correct value from a drop-down list box. When you create this type of measurement parameter, you also specify all the possible values to list in the drop-down list box by selecting data values. This is useful to record information such as take off signal values of *busy* or *clear*, or to record the corrosion level of a component.
CHK (Check Boxes)	The technician records the value by selecting a check box, or leaving it unselected, depending on the findings applicable to the flight, or those detected during the maintenance task.

Domain Type	Description
CME (Calendar Measurements)	The technician records the value by selecting a date from a pop-up calendar. This is useful to record information such as a curing date.
ME (Measurement)	The technician records the measurement by typing the correct number of the selected units in a field. This is the domain type to choose to create assembly measurements.
TEXT (Free Form Text)	The technician records the measurement by entering free form text in a text field.

Create flight records

Flight records are often created through Flight APIs, but if you have complete paper records, you can enter this information manually into CAMO. You can create flight records for historical flights – for latest flight or for a flight that occurred earlier.

About this task

If you have the correct permission, you can create flight records from the Inventory Details page, Flight History tab.

If you are creating more than one flight record for the same aircraft, create them in any order, but create only one flight per aircraft at a time. If flights for the same aircraft are created simultaneously, the usage accrued values (which are updated based on arrival dates) can be inconsistent.

When you create a flight, the up and down dates are optional, but if you leave them blank, CAMO populates these fields with the values entered for the actual arrival and departure dates.

To save you time when you enter flight dates, your administrator can enable the FLIGHT_ENTRY_COPY_ACTUAL_DT global parameter. When this parameter is enabled, the date that you enter in the Actual Departure Date field is copied to the other date fields in the Departure & Arrival area. You then edit the copied dates and times which updates the usage accrued values.

Steps

1. On your to-do list, **Fleet List** tab, select the radio button for the aircraft whose completed flight record you want to create.
2. Click **Create Flight**.
3. On the **Create Flight** page, **Flight Information** area, provide the following information:
   - Type a **Flight Name** in the following format: < *flight number*> <*destination airport code*> < *date*>.

> **Note** This field is auto-populated in the following format: <*aircraft OEM part number*> <*aircraft serial number*> <*current date*><*flight number*>. The flight number is set to 1 if you create a flight for an aircraft which has no flights logged yet for the current date. The flight number is incremented for every subsequent flight created on the current date. You can keep this name or modify it if needed.

- Type a **Description** for the flight.

4. On the **Create Flight** page, **Departure & Arrival** area, provide the following information and click **OK**:
   - Type a **Departure Airport** code.
   - Type the **Departure Gate** number.
   - Select an **Actual Departure Date** by clicking and selecting the date from the calendar, and then typing in the time.
   - If needed, change the **Scheduled Departure Date** and the **Up Date** if they are different form the actual departure date.
   - Type an **Arrival Airport** code.
   - Type the **Arrival Gate** number.
   - Select an **Actual Arrival Date**, by clicking and selecting the date from the calendar, and then typing in the time.
   - If needed, change the **Scheduled Arrival Date** and the **Down Date** if they are different form the actual arrival date.
   - Select the **Move aircraft to arrival location** check box if you want CAMO to update the location of the aircraft and all its installed items to the arrival location specified.

     With this check box selected, CAMO changes the current location of the aircraft to the specified arrival location. If the check box is cleared, the current location of the aircraft is not changed. The check box is normally cleared if your system is using a flight following system. The check box is normally selected if your system is not using a flight following system.

   After you enter the actual arrival date, the **Usage Accrued** area displays usage values that are based on the actual arrival date. The CYCLES delta defaults to 1, but you can change this value. After you enter either the actual departure date or the up and down dates, the HOURS usage values update. By default the hours delta value is the difference between the up and down dates (or the arrival and departure dates if the up and down dates are not entered), but you can change the delta value. For more information, see *Recording usage* .

Note It is possible for the TSN usage values to change between the time that you enter the actual arrival date and the time that you click OK. This can happen when a preceding or following flight record is created and the usage values are updated in the database (which updates the values that appear for the date that you entered in your record).

Edit flight records

On the Edit Flight page, you can modify important flight information like name, arrival and departure dates, and usage accrued.

About this task

If you update the Actual Arrival Date and your update changes the flight sequence for the aircraft, TSN usage values are updated on the flight record and on following flights and tasks. Usage values are updated if you edit the up and down dates.

Steps

1. On your to-do list, **Fleet List** tab, click the link for the aircraft whose flight record you want to edit.
2. On the **Inventory Details** page, click the **Historical** tab and then click the **Flight** tab.
3. On the **Flight** tab, click the **Name** link of the flight you want to edit.
4. Click beside **Flight Information**, **Departure & Arrival**, or **Usage Accrued**.
5. (Optional) Enter the reason for your change in the **Note** field.
6. Modify the information as needed and click **OK**.

CAUTION While the system updates values and the progress message is displayed, do not use the browser back or forward buttons. If you leave the page before it reloads with updated data, the information you entered will be lost.

7. When the progress message disappears and the values are updated, click **Close**.

The flight is updated and a record of the change is displayed on the History tab. Any notes manually added or any changes made to the usage are displayed under the Note column of the History tab.

Related concepts

Ways to record usage

Complete flights

Planned flights are loaded into CAMO through Flight APIs and are typically completed through Flight APIs. If there is a disruption in relaying a Flight API message, you can complete flights manually in the CAMO user interface.

About this task

If you are completing more than one flight record for the same aircraft, complete them in any order, but complete only one flight per aircraft at a time. If flights for the same aircraft are completed simultaneously, the usage accrued values (which are updated based on arrival dates) can be inconsistent.

Steps

1. On the **Inventory Details** page, **Open** tab, **Open Flights** tab, click a flight name.
2. On the **Flight Details** page, edit usage accrued values if required and then click **Complete Flight**.

> **Note** By default the hours delta value is the difference between the up and down dates (or the arrival and departure dates if the up and down dates are not entered). If the TSN usage values change between the time that you enter the actual arrival date and the time that you click OK, this can happen when a preceding or following flight record is completed and the usage values are updated in the database (which updates the values that appear for the date that you entered in your record).

Based on the flight dates in the record, CAMO adds the flight to the flight history in the appropriate sequence and updates the accrued usage values (including values for following flights if the flight you added was not the latest).

Recording usage

In CAMO, usage is the amount of time that an item has operated, or the number of times that an item has undergone a specific situation.

A typical aircraft will have usage measured in many different ways, including flying hours (HOURS), cycles, landings and engine operating time (EOT). A take-off and landing sequence of an aircraft is one cycle. Tracking usage information is essential to the proper calculation of maintenance deadlines and activities.

Usage parameters and usage values

Each assembly includes a list of usage parameters tracked on each assembly. There are three usage values recorded in CAMO:

- Time Since New (TSN): The measure of usage (in any usage parameter) since the inventory was manufactured.
- Time Since Install (TSI): The measure of usage (in various usage parameters) since the inventory item was installed into its current location.
- Time Since Overhaul (TSO): The measure of usage (in any usage parameter) since the inventory item was last overhauled.

In CAMO, TSN, TSO, and TSI are generic terms that can replace a series of previous terms, such as Cycles Since New (CSN) or Landings Since Overhaul (LSO).

TSN, TSO, and TSI are tracked against the current usage of inventory items.

The following historical values are displayed on a component's Inventory Details page, Historical tab, Installation sub-tab. These values are calculated on page load, as opposed to retrieved from the database, so any out-of-sequence edits to the records don't interfere with accuracy of the displayed values:

- The TSI value upon removal or installation. For installations, the value is always 0. For removals, the value is the difference between the component TSN value at removal and at the most recent installation of the component.
- The TSN value of the highest parent assembly.

Related concepts

Usage parameters and usage definitions

Ways to record usage

You can correct and adjust usage on any inventory including aircraft, assemblies, or components.

The following methods are available in CAMO to adjust usage information:

Recording usage: Creating and editing flights

The most common method to modify usage information is when you create or edit flights. You can create a flight record for the most recent flight or for one that occurred before the most recent flight. After you enter the actual arrival date, the Usage Accrued area displays usage values (based on the actual arrival date) for the aircraft and sub-assemblies. You can change the cycles and hours values when you create or edit flights.

The usage accrued tables show the usage parameters that are currently included in the usage definition assigned to each assembly at the time you create the flight.

Each flight record in CAMO includes the usage accrued during a flight. CAMO adds the same amount of usage to each component installed on the aircraft. In this way, each component accrues the same amount of usage as the assembly, and usage-based maintenance can be scheduled as required. Usage values recorded on a flight cannot be negative.

CAMO automatically calculates the flying hours parameter's delta value based on the difference between the up date and the down date provided in the flight record (or between the arrival and departure dates if the up and down dates are not entered). The flying hours value is calculated when these date fields are edited. If you do not want to use the default values calculated by CAMO, you can manually override the flying hours, cycles, or landings by typing a new value in the delta field.

When you edit the dates on a COMPLETE flight and your edit changes the flight sequence, usage values for the flight are updated depending on which dates you change:

- If you edit the actual arrival date, the TSN values are updated, but the hours delta values are not updated.
- If you edit the down date, the TSN values and the hours delta values are updated.

The change in the flight sequence is highlighted in the UI with a red warning.

If you edit the dates on a COMPLETE flight, but the flight sequence doesn't change, the TSN values and hours delta values are only updated if you edit the down date.

Recording usage: Creating usage records

You can use the creating usage records method to modify the aircraft cycles, hours, and other usage parameters. Usage records can only be created against assemblies. When you create a usage record, you need to ensure that the usage delta is applied to every component that was installed on the assembly on the collection date. You can create usage records for specific scenarios such as updating APU usage.

Recording usage: Editing inventory

You can use the Edit Inventory page to edit the exact usage values of a single inventory item. Any changes made to usage will not be applied to the inventory's sub-components. You normally use this method to make data corrections or to initialize usage on a newly received item.

When you edit usage, enter the corrected value, not the change to the value. You do not apply negative counts directly. When you enter the corrected value, CAMO re-calculates the values based on the difference between the old value and the new value. In this way, CAMO can apply negative counts as required.

Related concepts

Recording flights
Usage parameters and usage definitions
Editing usage for assemblies and parent inventory

Related tasks

Create flight records

Edit usage on historical flights

If you change the flight's dates, the TSN values on the flight and on following flights and tasks are corrected, but you can also edit incorrect usage on a flight through the Flight API or the Edit Flight page.

About this task

When you edit a historical flight, the usage for the following records is updated automatically according to the changes specified. This process is commonly referred to as "out of sequence" usage. The following corrections apply when creating and editing historical flights:

- Usage of aircraft, installed sub-assemblies, SYSTEM class inventory, installed components.
- Usage snapshot of all following flights, usage records, and usage corrections through editing inventory.
- Usage snapshot of complete maintenance, all raised faults, and work packages.
- Deadlines and time remaining.
- Calculated parameters dependent on any modified usage snapshots or deadlines.

Note The TSN, TSO, TSI values are updated accordingly for changes made in every scenario.

To edit usage on historical flights, do the following:

Steps

1. On your to-do list, **Fleet List** tab, click the link for the aircraft whose flight record you want to edit.
2. On the **Inventory Details** page, click the **Historical** tab and then click the **Flight** tab.
3. On the **Flight** tab, click the **Name** link of the flight you want to edit.
4. On the Flight Details page, click ↗ beside **Usage Accrued**.
5. Enter the difference in the **Delta** field to reflect the correct usage.

   You can also modify the values for the **Up Date** and **Down Date** fields to correct the usage.
6. Click **OK**.

The flight and its associated records (as mentioned above) are updated according to the Delta value.

Create a usage record

To update usage on an assembly, you can create a usage record. When you create a usage record, you need to ensure that the usage delta is applied to every component that was installed on the assembly on the collection date.

Steps

1. On your to-do list, **Fleet List** tab, select the radio button for the aircraft whose usage you want to record.
2. Click **Create Usage Record**.
3. On the **Create Usage Record** page, provide the following information:
   - Enter a **Collection Date** to identify the date that the usage accrued.
   - Enter a **Name** for the record. The name defaults to a sequential value, but you can provide a name that describes the reason for the usage record.
   - Enter a **Delta** or **Total** for each usage parameter as required. Entering one value automatically updates the other.
4. Click **OK**.
5. For aircraft, verify that a REAL_TIME_AIRCRAFT_DEADLINE_UPDATE work item is created and then completed. For assemblies other than aircraft, verify that a REAL_TIME_INVENTORY_DEADLINE_UPDATE work item is created and then completed.
6. Return to your task and review the scheduling.
7. Verify that the task deadline, Usage Remaining and Estimated Date (as applicable) have been updated.

Updating APU usage

APU usage is not normally recorded with flight records or with other small incremental usage records. It is recommended that you record APU usage by creating a usage record on the APU itself. Alternatively, you can create a usage record on the aircraft, and use it to add usage to only the APU.

In most cases, CAMO lists the parent assembly and any sub-assemblies installed on the parent assembly. However, if you are creating a usage record on the APU, only the APU assembly is listed. If you are creating a usage record on the aircraft, the aircraft assembly, the APU assembly, the engine assemblies, and any other assemblies installed on that aircraft are listed.

Applying negative counts

There are two ways to apply negative counts to an inventory item. One is to create a usage record with negative delta values, and the other is to use the Edit Inventory page. For more details, see *Ways to record usage*.

Editing usage for assemblies and parent inventory

You can edit the usage of an entire assembly or of inventory with sub-components by setting the usage values on the parent inventory. You can also choose to apply the usage to all sub-components.

If the Apply Deltas to Sub-Components check box is selected on the Edit Inventory page, all of the values for the current usage of the component are incremented by the change to the assembly usage.

You can edit the usage of any sub-component separately from the parent inventory. If you make a subsequent change to the parent inventory usage, the sub-component values are re-calculated, and you must again make individual changes to the sub-components. Changes to the values of the sub-components do not change the values of the parent inventory.

Due dates for tasks on the inventory are automatically updated by CAMO after usage changes are made.

An assembly's current usage is displayed on the Inventory Details page in the Current Usage area. An assembly's usage at the time of completion, for tasks in a work package, is displayed on the Task Details page in the Usage at Completion band.

Edit inventory usage

Steps

1. On the **Edit Inventory** page, in the **Assembly Usage** area, provide the following information:
   - Update the **TSN** (Time Since New), **TSO** (Time Since Overhaul), and **TSI** (Time Since Installed) values for the aircraft or sub-assembly.
   - **Apply Deltas to Subcomponents**: If checked, all of the values for the current usage on the component are incremented by the change in the assembly usage.
2. On the **Edit Inventory** page, **Subcomponent Usage** section:
   - Type **TSO** and **TSN** values for **Component Usage At Install** and **Assembly Usage At Install**.
   - Type **TSN**, **TSO**, and **TSI** values for **Current Usage On Component**.

> **Note**
>
> Multiple sub-components can be updated simultaneously. CAMO automatically calculates the other values.

Editing usage for single components

You can edit one component at a time by modifying the details of an inventory item directly. If the component is not installed on another inventory item, the highest inventory section of the CAMO page contains the usage for that component. The sub-component section is blank unless the component you are editing also has sub-inventory installed. If the component that you are editing is installed on a parent inventory item, the highest inventory section contains the usage details for the parent inventory, but the values are not editable. The sub-component section contains the inventory's usage values in an editable state.

CAMO lists the Component Usage at Install and Assembly/Highest Usage at Install values, in addition to the Current Usage on Component values. If you do not have the current usage values for the component, you can enter the component usage and assembly usage at install, and CAMO calculates the other values. When one field is changed, CAMO automatically updates the TSN, TSO, and Time Since Install (TSI) fields using variations on the following calculations:

- Component TSN = Component TSN at install + Component TSI
- Component TSO = Component TSO at install + Component TSI
- Assembly TSN = Assembly TSN at component install + Component TSI
- Assembly TSO = Assembly TSO at component install + Component TSO

Recording historical maintenance

You can capture historical maintenance by recording or editing technical incidents and faults after they have occurred, or by recording tasks and work packages after completion.

Recording historical tasks

You can record maintenance tasks after they have been completed using one of the following methods:

- Create a work package and assign the tasks to the work package. Then, carry out all required steps for its completion:
  - Schedule the work package
  - Start the work package
  - Complete the tasks
  - Complete the work package
- Use the Package and Complete functionality which automatically creates a work package, adds the selected tasks to the work package, and completes both the tasks and the work package, unless there are conditions that prevent the completion. This functionality provides a fast way to complete open tasks. Also, you do not have to assign labor to each labor line on a job card, and then complete each labor line for each task.

- Use the Create Historical Task functionality to create a historical task and assign the task to a work package. When you are creating historical tasks, applicability rules and transformation rules are enforced for tasks based on part numbers and are ignored for tasks based on configuration slots.

With each of these methods, you must specify the date and usage of the performed work package. There are two ways to record this information:

- Using the Start Work Package button or the Package and Complete button, you can open the relevant tabs and enter a start date without specifying usage at completion. In this case, CAMO automatically calculates the usage on the work package, and every task within the work package. In addition, CAMO automatically calculates the correct usages on the components that were installed and removed during the work package. Removed components' usage is rolled back, and installed components' usage is rolled forward, if the aircraft took flight between the time the work was completed and the time each task was recorded. This includes test flight and bench test usage accruals that occur within the life of the work package.
- Using the Start Work Package and Enter Usage button or the Package and Complete and Enter Usage button, you can enter the start date and manually enter the usage at the time of repair of the inventory item (the usage is defined as hours and cycles for the root assembly and any sub-assemblies). Components removed and installed will have usage adjustments according to these values. For future out-of-sequence usage accruals, CAMO will not adjust the usage for the work package or the tasks in it. To indicate that these usage values will not be automatically adjusted in the future, CAMO adds a comment to the completed task and work package usage snapshots stating that the usage values were manually entered.

Editing the details of technical incidents

Any action taken in the case of a reported or observed failure or malfunction of an airframe, engine, propeller, or appliance that is critical to the safety of a flight must be recorded in the aircraft's maintenance log. You can record these actions in CAMO as a flight safety impact either at the time when you create the fault for the technical incident (on the Raise Fault page) or at a later date, when the fault has been in the system for some time.

You can also edit some of the details of an existing fault. For example, you can specify an ATA chapter different from the chapter that was originally recorded as a resolved system.

Record technical incidents and occurrences

About this task

Record any action taken in the case of a reported or observed failure or malfunction of an airframe, engine, propeller, or appliance that is critical to the safety of flight in the aircraft's maintenance log as a flight safety impact. You can do this at the time you create a fault for the technical incident, on the Raise Fault page, or add the information later, when the fault already exists in the system.

Steps

1. On the **Fault Details** page, **Fault Information** tab, click Edit Fault .
2. On the **Edit Fault** page, select the **Flight Safety Impact** check box.
3. In the **Flight Safety Impact - Nature of Condition** area, click Create .
4. On the **Add Nature of Condition** page, select the check boxes for the appropriate conditions.
5. Click **OK**.
6. In the **Flight Safety Impact - Precautionary Procedures** area, click Create .
7. On the **Add Precautionary Procedure** page, select the check boxes for the appropriate procedures.
8. Click **OK**.

Edit fault details

You can edit the details of a fault after it has been created. For example, you can change the Resolution Config Slot field if a mechanic resolved the issue by fixing something on a different ATA chapter.

Steps

1. Find the fault.
2. Click the **Fault Information** tab.
3. Click Edit Fault .
4. In the **Fault Registration** area, provide the required information. Note the following:
   - **Resolution Config Slot**: If the fault was resolved on a different ATA chapter (resolved system) than the initially reported ATA chapter (failed system), start typing the name or ATA code of the config slot on which the issue was resolved, and then click the result from the list.
5. In the **Fault Details** area, provide the required information. Note the following:
   - **Recurrence Of**: If this fault is possibly a recurrence of a fault that occurred in the past on this aircraft, the name of the previous fault is shown.
6. In the **Resulting Events** area, click the plus sign to add resulting events (if required).
7. Click **OK**.

CAMO records this change in the Fault History area.

Related tasks

Find a task or fault

Record a work package that occurred in the past

You can record a work package after the maintenance visits are completed by either letting CAMO auto-calculate the accrued usage at start time or by manually entering the usage.

Prerequisite

- Ensure there are no other work packages currently in progress on the aircraft for the inventory item whose maintenance work you are about to record.

Steps

1. Create a work package.
2. Find the tasks that were completed in the past and assign them to the work package.
3. Schedule the work package.
4. On the **Work Package Details** page, click one of the following:
   - **Start Work Package** - opens a dialog box where you can specify only the Actual Start date of the work package, and CAMO automatically retrieves the usage accrued for the affected inventory at the specified date. Note that the default value for the **Actual Start Date** is the scheduled start date of the work package.
   - **Start Work Package and Enter Usage** - opens a page where you can specify both the Actual Start date of the work package and the accrued usage for each component.

   If you click **Start Work Package** , go to step 7.
5. (Optional) If you opened the **Start Work Package and Enter Usage** page, in the **Usage at Completion** area, enter the correct values for each component as they appear in the records from that start date. Note that if you are entering aircraft usage, the usage for sub-assemblies will automatically calculate based on the assembly calculation.
6. (Optional) To override the auto-calculated values, click the **Auto Calculate** field on either the **CYCLES** or **HOURS**.
7. Click **OK**.
8. If necessary, edit the details of the individual tasks included in the work package.

> **Tip** When using Start Work Package, usage adjustments applied to components take place based on the completion date of the task containing the part requirement. Therefore, take due care when entering these dates.

9. Complete the work package.
    - If you chose the option of CAMO auto-calculating the usage, but need to correct it in the future, you can do so by editing the Usage at Completion snapshot on the **Task History Details** page or Usage snapshot on the **Work Package Details** pages.

Related concepts

Calculated usage parameters

Related tasks

Package and complete tasks done in the past
Create work packages for an aircraft or component
Find a task or fault
Schedule work packages to internal maintenance locations
Schedule work packages to external vendors
Complete a work package
Finish or stop work on a task or fault
Batch complete tasks

Package and complete tasks done in the past

You can package one or more tasks that were completed in the past on an inventory item, and record their completion date in a single operation. Since packaging and completing in one step does not let you record details in individual tasks, it is best to use this feature to record the completion of simple tasks.

About this task

Doing these steps automatically creates a work package, adds the selected tasks to the work package, and completes both the tasks and the work package, unless there are conditions that prevent the completion. For example:

- The aircraft has missing components or overdue tasks; in these cases, the packaged tasks are completed but the work package remains in work.
- One or more of the selected tasks contains a part request with an invalid inventory serial number in these cases, the affected tasks remain active and the work package remains in work.

Note that, if at the time the work was completed, a tracked component was installed on the aircraft but it has since been removed, the work package that is created automatically shows the component that is currently installed, not the one that was installed at the completion date.

The package and complete options are also available on the corrective task pages of faults.

Steps

1. Go to the **Fleet List** tab, and click the aircraft name.

2. On the **Inventory Details** page, click the **Open** tab > **Open Tasks** tab.

   The list includes all open tasks that are not assigned to a work package. You can select only tasks that are active (ACTV).
3. Select the check box beside the open tasks that were completed, and click one of the following:
   - **Package and Complete Task**
   - **Package and Complete and Enter Usage**

   Tip You can also click **Package and Complete Task** and the **Package and Complete and Enter Usage** from the Task Details or Task Search pages.
4. On the **Complete Task** page, provide the following information and click **OK**:
   - **Repair Location**: Enter the location where the work was done.
   - **Completion Date**: Select the completion date, which occurred in the past. All selected tasks will have this date as their completion date.
   - **Current Usage**: Enter the correct usage as it appears in the records from the start date. If you clicked **Package and Complete and Enter Usage**, enter the correct usage as it appears in the records from the start date.

   Tip When entering aircraft usage after selecting **Package and Complete and Enter Usage**, the usage for sub-assemblies is automatically calculated based on the assembly calculation. To override the auto-calculated values, click the **Auto Calculate** field on either the **CYCLES** or **HOURS** row and enter the adjusted value.
5. If prompted, enter your user name and password, and press ENTER.

- The selected tasks are completed and are no longer shown in the **Open Tasks** tab.
- The work package that was automatically created is also completed, unless there are conditions that prevent the completion as outlined above.
- If you chose the **Package and Complete and Enter Usage** option, the following comment appears in the usage snapshot area of the completed work package: "These values were manually entered", indicating that CAMO will not be auto-adjusting these values in the future.
- On the **Inventory Details** page, **Historical** tab, **Usage** sub-tab, a usage record is created for any removed or installed components.

Related concepts

Calculated usage parameters

Related tasks

Record a work package that occurred in the past

Performing record corrections

You might need to correct or adjust inventory records in the course of maintenance activities.

Base or line maintenance technical records clerks are responsible for performing records corrections for inventory details, tasks, faults, sub-components, and work packages. For task deadlines, this involves correcting usage and manufactured or received dates. You can also edit labor history

Adjust and correct task deadlines

About this task

The following procedures outline situations that may occur during the operation of CAMO where a task deadline is incorrect. CAMO task deadlines are based on the equation: starting point + interval (baseline) = deadline. Therefore, the proper course of action is to adjust either the starting point or the interval, not the deadline itself.

This procedure applies to a calendar-based recurring task, that is not at its first iteration. In this scenario, the ACTV task deadline is incorrect, the task is calendar-based, and is a recurring task. It has been determined that the task definition is correct. This is not the first time the task has been completed, so there is a dependency on the previous task. Since the baseline information is correct, but the current active deadline is incorrect, it means that the last accomplished task was not properly recorded. This procedure corrects the information on the historical last accomplished task. When this occurs, the deadline of the ACTV task is automatically updated.

Steps

1. On the **Task Details** page for the ACTV instance of the task, click the **Task Information** tab.
2. Click the link for the **Previous Task**.
3. On the **Task Details** page for the previous task, click the **History** tab.
4. On the **History** tab, in the **Usage at Completion** area, click **Edit Usage Snapshot**.
5. On the **Edit Usage Snapshot** page, update the **Completion Date** to the correct value.
6. Click **OK**.
7. On the **Task Details** page, in the **Task Information** area, verify that **Actual Start Date** and **Actual End Date** have been updated.
8. On the **Task Details** page, click the link for the **Next Task**.
9. On the **Task Details** for the next task, click the **Scheduling** tab.
10. Verify that all the values have been updated.

Note Based on the Last Task Completion Date, the Custom Date is updated. Due Date is updated based on the new Last Task Completion Date/Custom Date and the original Baseline Interval. Forecast values are updated.

Correct usage at the last task completion date

About this task

This procedure applies to a usage-based recurring task that is not at its first iteration. In this scenario, the ACTV task deadline is incorrect, the task is usage-based, and it has been determined that the task definition is correct and the task is a recurring task. This is not the first time the task has been completed so there is a dependency on the previous task. Since the baseline information is correct, but the current active deadline is incorrect, it means that the last accomplished was not properly recorded. Therefore the information on the historical last accomplished task should be corrected. When this occurs, the deadline of the ACTV task is automatically updated.

Steps

1. On the **Task Details** page for the ACTV instance of the task, click the **Task Information** tab.
2. Click the link for the previous task.
3. On the **Task Details** page for the previous task, click the **History** tab.
4. On the **History** tab, in the **Usage at Completion** area, click Edit Usage Snapshot
5. On the **Edit Usage Snapshot** page, update the **Component TSN** to the correct value.
6. Click **OK**.
7. On the **Task Details** page, verify that the **Usage At Completion** has been updated.
8. On the **Task Details** page, click the link for the next task.
9. On the **Task Details** for the next task, click the **Scheduling** tab.
10. Verify that all the values have been updated.

Note Based on Last Task Completion Date, the Custom Date is updated. Due Date is updated based on the new Last Task Completion Date/Custom Date and the original Baseline Interval. Forecast values are updated.

Correct usage at the effective date

This procedure applies to a task at its first iteration or a non-recurring task, with a usage-based deadline, scheduled from the effective date.

About this task

In this scenario, the usage-based deadline of an ACTV task is incorrect, it has been determined that the task definition is correct, and this is the first instance of this task and it is scheduled from an effective date. In this case, the starting point usage information on the active task should be updated. When this information is corrected, then the deadline on the ACTV task is automatically updated.

Steps

1. On the **Task Details** page for the ACTV instance of the task, click the **Scheduling** tab.
2. In the **Deadline Start Values** area, click Edit Deadline Start Values
3. On the **Edit Start Values** page, update the **Component TSN** to the correct value.
4. Click **OK**.
5. On the **Task Details** page, click the **Scheduling** tab.
6. Verify that the Effective Date (Custom Date) has been updated.
7. Verify the **Forecast** values have been updated.

Correct manufactured or received dates

About this task

This procedure applies to a calendar-based task at its first iteration or a non-recurring task, scheduled from the manufactured or received date. For example, that the baseline task definition is correct and the task is scheduled from the manufactured or received date; however, the actual Manufactured/Received Date for the inventory item is incorrect. When this information is corrected on the inventory, the deadline on the ACTV task is automatically updated. The Manufactured Date is mandatory for ACTV tasks that are scheduled from the manufactured date. The Received Date is mandatory for ACTV tasks that are scheduled from received date.

Steps

1. On the **Task Details** page for the ACTV instance of the task, click the **Inventory** link.
2. On the **Inventory Details** page, click **Edit Inventory**.
3. On the **Edit Inventory** page, update the **Manufactured Date** or the **Received Date**.
4. Click **Finish**.
5. Type a note as required, and click **OK**.
6. If prompted, type your password, and click **OK**.
7. On the **Inventory Details** page, click the **Details** tab.

8. Verify that the **Manufactured Date** and/or **Received Date** are updated.
9. Click **OK**.
10. On the **Task Details** page, verify that the **Due Date** is updated.

Related concepts

Manufactured date and received date

Add deadlines to ad hoc tasks or faults

Steps

1. On the **Task Details** page for the ACTV instance of the task, or on the Fault Details page, click the **Scheduling** tab.
2. Click **Add Deadline** in the **Due** area.
3. On the **Add Deadline** page, select one of the following **Deadline Types** in the **Deadline Details** section:
   - **Known deadline date**: Select this option to specify the deadline date.
     - **Start Date**: Type the start date for the task or fault. For ad hoc tasks, the start date defaults to the current date; for ad hoc faults, it defaults to the date the fault was found.
     - **Due Date**: Type the deadline date for the task or fault. The due date cannot be earlier than the start date.
     - **Notes**: Optional. Type a note if needed.
   - **Known Deadline Usage**: Select this option to specify the usage values to use as the deadline.
     - Select a **Usage Parameter** to set the deadline.
     - The **Deadline Usage** table shows the current value of the usage parameter for the inventory assembly and component:
       - **Start Usage**: Type the start value for the usage. For ad hoc tasks, the start usage values default to match the current usage values; for ad hoc faults, they default to the values entered when the fault was found. Note that the component TSN cannot be set to a value lower than zero.
       - **Deadline Usage**: Type the usage values to use as the deadline for the task or fault. Note that the deadline usage component TSN cannot be set to a value lower than the start usage component TSN.
   - **Known start date & interval**: Select this option to specify a time interval between a start date and the deadline:
     - **Calendar Parameter**: Select a calendar parameter.
     - **Start Date**: Type a start date to use to calculate the deadline.
     - **Interval**: Type a number to use as the interval between the start date and the deadline.

    - **Notes**: Type a note if needed.
- **Known start usage & interval**: Select this option to specify a usage interval between a start usage value and the deadline:
    - **Usage Parameter**: Select a usage parameter from the drop-down list to set the deadline.
    - The **Deadline Usage** table shows the current value of the usage parameter for the inventory assembly and component:
        - **Start Usage**: Type start value for the usage. For ad hoc tasks, the start usage values default to match the current usage values; for ad hoc faults, they default to the values entered when the fault was found. Note that the component TSN cannot be set to a value lower than zero.

4. Click **OK**.

Inventory items and inventory records

Inventory items are the physical assets and parts owned or used by your organization.

Aircraft, engines, parts, and consumable supplies are all inventory items. Inventory items are associated with a part number, and each inventory item has a tail number, a serial number, or a batch number by which it is identified.

You can create and manage maintenance history by performing various actions on inventory records. Each inventory item must have an inventory record in CAMO.

Inventory classes

All part numbers, part groups, inventory, and stock numbers in CAMO have an *inventory class*. The inventory class identifies the functional class of the item, and dictates the manner in which CAMO handles inventory, for example, the extent to which CAMO tracks the inventory details, or whether it verifies and enforces that parts are installed on the correct configuration slot.

The inventory class that is assigned to a part number must match the inventory class of the part group to which the part belongs. All inventory of the part must also have the same inventory class as the part number and the part group. For example, you cannot assign a part that has the serial-controlled inventory class to a part group that has the tracked inventory class.

The inventory class is separate from, but related to, the configuration class associated with configuration slots. There are rules in CAMO that determine which inventory class can be defined, used, and installed on each type of configuration class.

The following table describes the inventory classes, and lists the type of configuration slot(s)—identified by the configuration class—with which each inventory class can be associated. In other words, the configuration slots that can have part groups, part numbers, and inventory of each inventory class.

Inventory classes

Inventory Class	Code	Description	Configuration Class
Aircraft	ACFT	Used exclusively for aircraft. Aircraft inventory have special logic in CAMO, which allows them to have flights, and to be released from maintenance. You can track usage for each serial number, and create maintenance programs in CAMO. CAMO keeps full history of aircraft inventory.	ROOT
Assembly	ASSY	Used for items, other than aircraft, that have their own logbook, and that can accrue usage even when they are not installed on a parent assembly. Engines and APUs are examples of part numbers and inventory that should have the assembly inventory class. You can track usage for each serial number, and create maintenance programs in CAMO. An assembly consists of several parts and components that have lower inventory classes such as tracked, serial-controlled, and batch. The user roles and authorities determine which assemblies users can access and update in CAMO.	ROOT or SUBASSY

Inventory Class	Code	Description	Configuration Class
Tracked	TRK	Used for items that have serial numbers, that are repairable, and that are: • High-value items. • Items that are significant in terms of safety. • Items for which you want to record the complete cradle to grave history—receipt, installation, removal, and repair. You can track usage for each serial number while it is installed on an assembly. Tracked parts can be mandatory in determining the completeness of a parent assembly. Configuration control applies to tracked parts; CAMO tracks and enforces the configuration slot position where the tracked part are installed, ensures that only the quantity of parts specified in the assembly baseline are recorded as installed on the inventory, and strictly validates the serial numbers installed and removed. All major components—often referred to as rotables or key repairables—should be classified as tracked inventory.	TRK
Serial Controlled	SER	Used for items that have a serial number but that do not require the detailed record keeping of tracked items. CAMO collects usage against serial-controlled components while they are installed on an assembly. However, configuration control is not applied in CAMO. You cannot tell exactly which serial numbers are installed on a given aircraft.	Any (ROOT, SUBASSY, TRK, SYS)

Inventory Class	Code	Description	Configuration Class
Batch Controlled	BATCH	Used for items that are not tracked individually—they do not have serial numbers—but that are tracked as a batch with a quantity. Every time a new batch is received, CAMO generates a batch control number. Batch control numbers are used much like serial numbers, but they refer to a collection of items rather than a single item. Because batch parts are controlled by quantity, CAMO splits the batch into sub-portions under several circumstances, for example when some of a batch is transferred to a different location, or when some of the items in a batch are sent for repair and have a different inventory condition than the items that are still serviceable. When batches are split, attachments and technical references are copied to the splits. At any time after a batch is split, if an attachment or technical reference is added, edited, or deleted on one batch inventory record, all other records in the split batch are updated. In some situations, a document might only apply to one portion of a split batch. In this case, you will need to add a note to the inventory record. Unless they are marked as repairable, batch items are treated as consumables that are not tracked after they are issued. When a repairable batch inventory is issued, CAMO expects a turn-in. Note that although batch inventory can be marked as repairable, this does not change its financial type.	Any (ROOT, SUBASSY, TRK, SYS)

Inventory Class	Code	Description	Configuration Class
Kit	KIT	Used for groups of parts, consumable items, and tools that are assembled to complete a particular task, or address an event. The items in a kit are stored together and move through the system as a single entity. Kits can be purchased, shipped, reserved, issued and turned in just like regular inventory. However, kits differ from regular inventory, in that they are assembled and disassembled; they are never installed on wing. It is the individual items within the kit that are installed, consumed and expensed. The kit itself has no financial value, its value is the sum of the individual items it contains.	Any (ROOT, SUBASSY, TRK, SYS)

Related concepts

Configuration hierarchies for assemblies

Creating and editing inventory records

You can create inventory records after your equipment baseline (assemblies and their hierarchy of configuration slots, part groups, and part numbers) is created.

Inventory records provide detailed information about your assets, including sub-inventory, open maintenance tasks, faults to be resolved, and historical data. Historical data includes completed maintenance tasks, closed faults, flight information, usage, and more.

Inventory records are created at different times, by people in various roles, and through several different methods:

- When CAMO is first implemented, inventory records are usually created in bulk as part of the migration of data from legacy systems in your organization.
- Materials management personnel create inventory records when they receive new inventory, for example, as the result of a purchase order, a borrow order, or a consignment order.
- As parts or components are removed from assemblies during maintenance activities, it is possible that some do not already have an inventory record, for example, due to an omission by material receipt personnel. Authorized users can create inventory records for such items as they are removed from an assembly.

To create an inventory record, enter high-level information about the item such as the part number, unique identifier, and location. After you enter this information, CAMO opens a sequence of pages on which you can edit the details of the inventory item, including purchasing information and usage details.

CAMO matches the serial number, manufacturer, and part number with existing inventory records to check for any duplicate records for inventory items. The serial number may be a direct match, or a near match, depending on CAMO configuration. The Part Number may be a direct match, or an alternate part number. For more information, see related topics.

When complex inventory items such as aircraft or engines are involved, you can also edit the subcomponents of the inventory. If you omit mandatory information, CAMO displays a message indicating the information that is missing.

Inventory records can be edited at any time by authorized users. You might edit inventory records to correct information that affects the future maintenance schedule of inventory items, or that affects compliance with industry regulations.

There are different permissions required for editing aircraft inventory verses other inventory classes (ASSY, TRK, SER or BATCH). Access to aircraft records is more highly controlled with four separate permissions, one for each of the edit inventory pages.

Related concepts

Unarchiving and reinducting inventory

Create an inventory record manually

Most inventory records are created automatically, but when necessary, you can manually create inventory records.

About this task

You can create inventory using similar steps from various pages such as Part Search, Part Details, and Inventory Search. The following steps start on the Part Details page.

Steps

1. On the **Part Details** page, click **Create Inventory**.
2. Provide the requested information. Note the following:
   - Manufactured Date: If you enter a manufactured date for an item that has a shelf life, CAMO automatically calculates the shelf-life expiry date.
   - Shelf-Life Expiry: Mandatory for parts with shelf-life configured.
3. Click **OK**.

Find and edit inventory

Steps

1. Select the **Inventory Search** menu item:
2. On the **Inventory Search** page, type the appropriate search criteria.
3. Click **Search**.
4. In the **Parent Assembly** or **Serial Number** column, click the link of the desired inventory from the results.
5. On the **Inventory Details** page, click **Edit Inventory**.
6. On the **Edit Inventory** page, you have the following options:
   - Click the link for the step that you want to proceed to; all change(s) are saved.
   - Click **Next** to save the change(s) and continue editing the next step.
   - Click **Apply** to save the change(s) and remain on the current page.
   - Click **Finish** to save the change(s) and finish the editing process.
   - Click **Cancel** to cancel the editing process.

Edit inventory details

Steps

1. On the **Edit Inventory** page, in the **Identification** area, provide values for the following mandatory fields. Values for the remaining fields are optional and can be provided as needed.
   - Select an OEM Part No.
   - Enter an OEM Serial No.
   - Enter a Barcode.
2. On the **Edit Inventory** page, in the **Aircraft** area, provide values for the following mandatory fields. Values for the remaining fields are optional and can be provided as needed.

   Note

   This section only appears if the inventory item edited is an aircraft.

   - **Registration Code**: The registration code is unique to every aircraft.
   - **Issue to Account**: If issue account is not specified on the work package or the task that the part request belongs to, this is the default account used. The Issue to Account is mandatory for AIRCRAFT, but not for ASSY types.
3. On the **Edit Inventory** page, in the **Purchasing/Receipt** area, provide values as needed for the optional fields.

4. On the **Edit Inventory** page, in the **Authority** area, specify an **Authority** if one is required. To search for an authority, click
5. Click **Next** to proceed to the following section.
6. On the **Edit Inventory** page, in the **Details** section, type any pertaining **Notes**.
7. Click **OK**.

Edit sub-component details

Steps

On the **Edit Inventory** page, in the **Subcomponents** area, provide the following information for each sub-component that requires modification:

> **Note**
>
> This section is available for inventory of class ACFT.

- **Check box**: Specifies if the component will be created when the changes are saved. Clear the check box to remove items.
- **Mandatory**: Indicates airworthiness requirement.
- Select the appropriate **OEM Part No**.
- Type the **Serial No/Batch No**.

> **Note**
>
> This is the serial or batch number given by the original equipment manufacturer.

- Type **OEM Lot No**.
- Type **OEM Batch No**.
- Type the **Manufactured Date**.
- Type the **Received Date**.
- Type the **ICN (Inventory Control Number)**.

Edit task lists for inventory items

Steps

1. On the **Edit Inventory** page, provide the following information:
   - To display all task definitions on subcomponents of this inventory, select the **Show Tasks on Subcomponents** check box.

- To display all the non-recommended task definitions, select the **Show Non-Applicable** check box.
- To display only on-condition task definitions select the **Show Only On Condition Tasks** check box.

2. To create a task from a task definition, select one task definition and click **Create Task From Definition**.
3. To create a task from a task definition and set a deadline, do the following:
   - Select one task definition, and click **Create Task From Definition and Set Deadlines**.
   - On the **Create Task** page, enter the **Effective From** date.
   - Click **OK**.
   - If prompted, type your password, and click **OK**.

     An active task with a deadline is created from the definition.
4. To create a historical task from a task definition, do the following
   - Select one task definition, and click **Create Historical Task From Definition and Set Deadlines**.
   - On the **Create Historical Task** page, provide the following information:
     - Enter the **Date** that this task was completed on.
     - Type the usage parameters for that task.
     - Optional. Type a Reason.
     - Optional. Type a Note.
   - Click **OK**.
   - If prompted, type your password, and click **OK**.

Manufactured date and received date

The manufactured date and received date are provided on an inventory record. These dates can be used when scheduling tasks

The manufactured date and received date of inventory are optional, except in the following instances:

- When you create or edit inventory of a part number for which your maintenance baseline includes at least one ACTV maintenance requirement scheduled from the manufactured date, the manufactured date is mandatory.
- If there is at least one ACTV maintenance requirement scheduled from the received date, the received date is mandatory.
- If there are maintenance requirements scheduled from the manufactured date, and others from the received date, both dates are mandatory.

If you are creating an inventory record for a sub-component of a configuration slot that has requirements with mandatory manufactured and/or received dates, and the sub-component does not have these dates, CAMO creates the sub-component, and notifies you with an alert.

When you specify the Manufactured Date or Received Date in an inventory record, you can select the *Apply this date to all sub-components* check box to have CAMO apply this date to all sub-components of the inventory. If the check box is not selected (default), then the manufactured or received date is applied to only sub-inventory with the system inventory class.

Note

The *Apply this date to all sub-components* check box displays only when you are creating the inventory record and specifying the manufactured and received dates. If you edit an existing inventory record, you can change the manufactured date or the received date, but you do not have the option to automatically apply the change to all sub-components.

Related tasks

Correct manufactured or received dates

Locking inventory

You can lock an inventory item to prevent users from editing or deleting the inventory item's records. The lock applies to all users, including those with read and write permissions for the inventory item.

Locking an inventory item locks records for that item, and for its sub-inventory and sub-assemblies. The lock affects only those records directly related to the inventory item, such as flight records for an aircraft inventory item, not those that only refer to the item, such as records for an engine that was on an aircraft but has since been removed.

You might want to lock inventory items during an investigation, for example, an aircraft safety investigation, and keep the items locked until the investigation is complete. This ensures that no changes are made to the inventory's records.

Permission to lock and unlock inventory is normally granted to only one CAMO user. When appropriate, that user can unlock the inventory items, allowing users with permission to again edit the inventory records.

When an inventory item is locked, a message displays on the Inventory Details page.

Note You cannot lock kit inventory. You can prevent users from removing inventory items assigned to a kit by sealing the kit. Only users who have a specific permission can remove the seal from a kit. You cannot lock inventory items included in a kit. You can remove an item from the kit and then lock the item, or seal the entire kit.

Lock and unlock inventory records

You can lock an inventory item to prevent users from editing or deleting the inventory item's records.

Steps

1. On the **Inventory Search** page, enter your search criteria and click **Search**.
2. In the **Parent Assembly** or **Serial Number** column, click the link.
3. On the **Inventory Details** page, click **Lock Inventory**.
4. On the **Lock Inventory** page, provide the following information:
   - Optional. Select the **Reason** for locking the inventory.
   - Optional. Type any additional information in the **Notes** field.
5. Click **OK**.
6. If prompted, type your password, and click **OK**.

   When an inventory item is locked, a message displays indicating the same on the Inventory Details page.
7. On the **Inventory Details** page, click **Unlock Inventory**.
8. On the **Unlock Inventory** page, provide the following information:
   - Optional. Select the **Reason** for unlocking the inventory.
   - Optional. Type any additional information in the **Notes** field.
9. Click **OK**.
10. If prompted, type your password, and click **OK**.

Archiving inventory

When an inventory item is sold or when you no longer have financial ownership of an item, you can archive its inventory record. CAMO automatically archives an inventory record when specific events occur. Maintenance and event history are preserved for archived inventory records.

When inventory is archived:

- Inventory reservations are canceled.
- Archived items are not included in current financial or inventory records and are not used in inventory counts or calculations.

- CAMO does not update or edit the inventory.
- CAMO cancels transfers associated with the item.
- Shipments that only contain archived inventory are canceled.
- Shipment lines that contain archived inventory are removed in shipments that also contain non-archived inventory items.
- Usage is not accrued so usage-based maintenance requirements remain static and do not approach their deadlines.
- Calendar-based maintenance requirements do approach their deadlines, but these overdue tasks are removed if the inventory record is unarchived.

CAMO automatically archives inventory when:

- You receive a replacement item on an exchange order for the item that was shipped out.
- You inspect repaired batch inventory that is received for a repair order line. The received batch is created in the system with a new batch number and the record for the corresponding batch inventory sent for repair is archived.
- You ship borrowed inventory back to its owner. You don't own borrowed inventory but there is a record for it in CAMO.
- You return received inventory to a vendor.
- You create an ad-hoc shipment and ship inventory to a vendor.

CAMO automatically unarchives inventory when:

- Inventory that is received directly matches the serial number and part number of an archived record.
- Inventory that is received indirectly matches the serial number and an alternate part number with the same manufacturer, and part group matches an archived record.

If you attempt to create inventory that directly matches the serial number and part number of an archived record, the record match is detected and you can decide whether to proceed and unarchive the existing record.

Related concepts

Unarchiving and reinducting inventory

Unarchiving and reinducting inventory

When an inventory item is sold or when you no longer have financial ownership of it, its inventory record is archived in CAMO. If that same item is later received back and you attempt to create an inventory record, CAMO matches the inventory with its archived record, then unarchives the record and reinducts the inventory.

Parts are regularly modified as a result of airworthiness directives or service bulletins and their part numbers can be changed. If this happens outside your organization to a part with an archived record, the same physical part will have a different part number than the existing record. CAMO

can detect an indirect match, unarchive and update the existing record with the new part number and reinduct the inventory.

Reinduction preserves cradle-to-grave record keeping and ensures that two separate records are not created for the same physical inventory item.

Records are matched when the unique identity of a received item and an existing record is the same. CAMO searches for direct and indirect matches:

- Direct: the serial number, manufacturer code, and part number match.
- Indirect: the serial number, manufacturer code, and an alternate part number match.

CAMO handles the search results in the following ways:

- If an active direct or indirect match is found, CAMO prevents the user from creating the inventory record.
- If an active inventory record does not exist, CAMO will check to see if one or more direct or indirect archived copies of the inventory record are being created. If there exist archived inventory records for the inventory item, CAMO will give the user the option of creating a new inventory record or unarchiving the most recently archived inventory record. In cases where you find multiple inventory records for the same inventory item, you can cross-reference duplicate inventory records.
- If no active or archived copies exist, CAMO will create the inventory record.

Related concepts

Archiving inventory
Inventory associations

Related tasks

Unarchive inventory

Unarchive inventory

You may need to unarchive inventory. Unarchived inventory can be reinducted into CAMO.

About this task

> **Note** You cannot unarchive batch inventory. To reinduct an inventory record for batch inventory, recreate the inventory with a new batch number.

Steps

1. Open the **Inventory Details** page for the archived inventory.
2. Click **Unarchive Inventory**.

3. On the **Unarchive Inventory** page, enter the required information and click **OK**.

Related concepts

Unarchiving and reinducting inventory

Reuse of records for received inventory

CAMO does not create new records for inventory received through shipments if there is an existing archived or non-archived record for an item with the same serial number and part number or with the same serial number, part group, and manufacturer.

When CAMO detects a matching record, it displays warnings, options, and sometimes alerts and routes both received and existing inventory to the appropriate location for processing or verification.

Records are matched when the unique identity of a received item and an existing record is the same. CAMO searches for direct and indirect matches:

- Direct: the serial number, manufacturer code, and part number match.
- Indirect: the serial number, manufacturer code, and an alternate part number match.

You can disable indirect matching by setting the global MATCH_RECORDS_PG_MF_SN configuration parameter. See the *CAMO Administration Guide*.

CAMO processes receipt of inventory with existing records based on the type of match and the state of the existing inventory with the same identity.

Existing records matched or detected for received inventory

Condition of existing inventory	Direct match	Indirect match
Archived	• Record unarchived. Inventory reinducted using existing record. • No warning message. No alert. History note added.	• Record unarchived. Inventory reinducted and record and updated with the part number of the received part. • No warning message. No alert. History note added.

Condition of existing inventory	Direct match	Indirect match
Installed (INSRV)	• If the receiving clerk selects Maintenix Error, the record is updated with detachment of the installed item, condition is changed to INSPREQ, and location is changed to the receiving location. A new record with serial number XXX is created for the unknown installed item. Alert sent. • If the receiving clerk selects After-the-Fact Receipt, the shipment is completed and the existing inventory record is updated with a shipment-receipt history note.	• If the receiving clerk selects Maintenix Error, the received inventory is routed to quarantine for verification. The existing record is updated to detach the installed inventory and the condition is changed to QUAR. The part number is not changed. History note added. A new record with serial number XXX is created for the unknown installed item. • If the receiving clerk selects After-the-Fact Receipt, the shipment is completed and the existing inventory record is updated with a shipment-receipt history note. The part number is not updated on the shipment.
Loose, on-hand	• If the receiving clerk selects Maintenix Error, the existing record is updated to the condition and location of the received inventory. Alert sent. • If the receiving clerk selects After-the-Fact Receipt the shipment is completed and the existing inventory record is updated with a shipment-receipt history note.	• If the receiving clerk selects Maintenix Error, the inventory condition on the existing record changes to QUAR and the inventory is routed to quarantine. The part number is not changed. History noted added. • If the receiving clerk selects After-the-Fact Receipt the shipment is completed and the existing inventory record is updated with a shipment-receipt history note.
Scrapped or condemned	If the receiving clerk selects Maintenix Error, the inventory condition of the received item changes to QUAR. Alert sent.	The inventory condition of the received item changes to QUAR and the item is routed to quarantine.

If more than one record potentially matches the serial number, part group, and manufacturer then CAMO does not reuse the record, but it does the following:

- Receives the shipment and creates a new inventory record.
- Adds a history note to the new record that identifies the new part number and the possible matching records.
- For archived record, sends an alert that identifies the new part number and the possible matching records. Technical records can investigate and cross-reference the appropriate records.
- For a non-archived record, changes the inventory condition of the received inventory to QUAR. The quarantine agent can investigate and cross-reference the appropriate records.

Inventory associations

It is possible for an active inventory record and an archived inventory record to refer to the same physical inventory item. CAMO allows you to link these duplicate inventory records to form *inventory associations*.

CAMO supports the scenario of duplicate inventories in two ways. First, items being unarchived, either through the inventory receipt process, or the inventory creation process. This scenario will have a more comprehensive process to identify old inventory records to unarchive.

Second, there are cases where the user finds multiple inventory records (one ACTV, the others archived) that refer to the same physical inventory item. In this scenario, the user may choose to associate the inventory records. The association among these records indicates that the records belong to a single inventory item and also make available the history of the inventory item, allowing a more accurate task compliance.

The Also Known As button is available on the Inventory Details page of inventory records, and is used to manually create an association. This button is visible for all inventory records other than records for scrapped, locked, or archived inventory items.

For a given inventory record, all the inventory records associated with it are listed under the Also Known As table on the Inventory Details page of the record. An inventory record can belong to no more than one association at a time.

Related concepts

Unarchiving and reinducting inventory

Related tasks

Create inventory associations

Remove inventory records from an association

Create inventory associations

You create inventory associations for inventory records that refer to the same inventory item. Associations are useful for understanding the history of an inventory item.

Prerequisite

You must first identify the inventory records that refer to the same physical inventory item. You need the barcode of these inventory records to create inventory associations.

Steps

1. Navigate to the Inventory Details page of any one of the inventory records that you want to associate with each other.
2. Click **Also Known As**.
3. On the **Also Known As** page, **Inventory Barcode** field, enter the barcode for the inventory record you want to associate with the current inventory record.
4. Click **OK**

Each inventory record displays the inventory records associated with it on the Also Known As table of the Inventory Details page.

> **Note** An inventory record can belong to no more than one association at a time. So if one of the inventory records already belongs to an association, the other inventory record will be added to the existing association.

Remove inventory records from an association

In cases where it is discovered that two associated inventory records don't actually reference the same physical inventory item, the items can be removed from the association.

Steps

1. Navigate to the Inventory Details page of any inventory record associated with the inventory record you want to remove.
2. On the **Also Known As** table, select the radio button for the required inventory record and click **Delete Inventory Association** (⊟).
3. Enter a note if necessary and click **OK**.

The selected inventory record is removed from the association, which means its no longer linked to the current inventory record or any other inventory record in that association. If there are only two inventory records in the association, removing one inventory record will end the association.

Changing the part number of inventory

On the Edit Inventory page, you can change the part number assigned to an inventory item by selecting from a drop-down list of existing alternate part numbers.

When you change the part number of an inventory item, CAMO adjusts the quantity of inventory items for both the old part number and the new part number, updates the average unit price of the new part number—taking into account the new inventory that has that part number, and the average unit price of that inventory—and debits and credits the relevant asset accounts.

If the part numbers have part-specific scheduling rules with different task deadlines, the part-specific scheduling rule for the new part number is used.

When the part number is changed, CAMO verifies that the new part number is compatible with the relevant assembly's allowable configuration and, if it is not, sends you a warning or error message.

Attaching and detaching inventory

If an inventory item has been incorrectly installed on the wrong parent inventory, you can detach the inventory item, and then attach it to the correct parent inventory.

Use the Attach Inventory or Detach Inventory buttons on the Inventory Details page, Sub Inventory tab, and then provide a reason for the change and a note. The configuration change, the reason, and the note are recorded and stored in the inventory record.

The ability to attach or detach inventory is controlled by permission settings. For information on this, see the CAMO Administration Guide.

Attach and detach components outside of tasks to correct configuration

Prerequisite

- The record of the inventory item that will be attached to the aircraft, if it already exists in CAMO, must indicate that the inventory item is currently uninstalled. If the item is attached to another aircraft, you must first detach it from that aircraft, and then attach it to the correct aircraft.

About this task

Use these instructions when inventory records in CAMO identify the incorrect component serial number as the one that is installed on an aircraft. The process to follow to correct the inventory records is to detach the inventory that records erroneously show as installed on the aircraft, and then attach the correct component, which means recording the correct serial number in CAMO as being installed on the aircraft. When following this process, there is no direct link in CAMO as to why a component was detached and another one attached. Therefore, it is advisable to type notes in CAMO to explain why these steps are being performed.

The steps outlined in this section are to be followed when inventory configuration is to be updated. The following assumptions have been made:

> **Note**
>
> The instructions explain how to correct the configuration of an aircraft. Updating the configuration of engines or other components that require inventory configuration follows the same process, except that you must search for the engine or component inventory.
>
> After completing the correction, additional investigation is required to determine where the item detached from the aircraft is located and its condition. The process to update this information in CAMO is not outlined in following instructions.

If a component is received, inspected as serviceable and then you update the inventory details to detach the sub-components that were missing when the item was received, the inventory is in REPREQ condition. If the inventory should be in RFB condition, it must be marked as inspection required and inspected.

Related concepts

RFB inventory condition

Detach inventory items

About this task

An inventory item was incorrectly identified in CAMO as being installed on the aircraft, so it has to be detached from the aircraft.

Steps

1. On your to-do list, click the **Fleet List** tab.
2. In the **Aircraft** column, click the name of the aircraft.
3. On the **Inventory Details** page, click the **Sub Inventory** tab.
4. Select the radio button to the left of the inventory item.

5. Click **Detach Inventory**.
6. On the **Detach Inventory** page:
   - **Removal Location**: The value defaults to the current location of the aircraft. If the part was removed at a different location, do the following:
     - Click **Select a Removal Location**.
     - On the **Location Search** page, enter the search criteria.
     - Click **Search**.
     - Select the radio button to the left of the location where the part was removed.
     - Click **Assign Location**.
7. Click **OK**.
8. If prompted, type your password, and then click **OK**.

Attach inventory items

About this task

The inventory item that is installed on the aircraft must be attached to the aircraft in CAMO. The inventory item that is to be attached must already exist in CAMO.

Steps

1. On the **Inventory Details** page, click the **Sub Inventory** tab.
2. Locate the configuration slot in the inventory hierarchy where the inventory item will be attached.
3. Select the radio button to the left of the configuration slot.
4. Click **Attach Inventory**.
5. On the **Inventory Search** page:
   - The default search criteria include **Assembly**, **Config Slot**, **Part Group**, **Installed and Location**, based on the aircraft's current location.
   - Type additional search criteria as needed.
   - Select the **Include Issued Inventory** check box. This lists all uninstalled inventory items for the specified location.
6. Click **Search**.
7. Select the check box to the left of the inventory item to be attached.
8. Click **Assign Inventory**.
9. (Optional) On the **Attach Inventory** page, type a note as to why the item is being attached.
10. Click **OK**.
11. If prompted, type your password, and click **OK**.

Create and attach inventory

About this task

If the inventory item to be installed is not currently in CAMO, this procedure creates the inventory item and attaches it to the aircraft.

Steps

1. On the **Inventory Details** page, click the **Sub Inventory** tab.
2. Navigate to the configuration slot in the inventory hierarchy where the inventory item will be created and attached.
3. Select the radio button to the left of the configuration slot.
4. Click **Create & Attach Inventory**.
5. On the **Create Inventory** page, provide the following information. You might see all or some of these fields depending on your role's permissions:
   - **OEM Part No**: Select the part number to attach.
   - **Serial No**: Type the serial number of the part being attached. This value defaults to 'XXX'; modify it to reflect the actual serial number which to be created and installed.
   - **Owner**: Select the owner of the inventory item.
   - **Credit Account**: The default value can be left as is.
   - Optional. Enter a note indicating why the item is being created and attached.
6. Click **OK**.
7. If prompted, type your password and click **OK**.
8. On the **Edit Inventory** page, update the inventory details of the item created.
9. On the Inventory Details page, click OK.

Backdating sub-component installations and removals

CAMO does not support backdated sub-component installations and removals in all scenarios. If you create an installation record for an engine sub-component in CAMO prior to a recorded engine change, the usage snapshots may not be updated automatically. You would have to manually correct the usage for the sub-component on the removed engine, not on the aircraft on which the engine was previously installed. In order to mitigate this problem, record the configuration changes in order, although independent configuration changes can be recorded out of sequence.

For example, consider the following scenario:

1. Two flights records AAA and BBB are created.
2. Records of an engine removal and installation are created.
3. Two flight records CCC and DDD are created.

4. Records of removal and installation of a sub-component of the engine are created for a date between flights AAA and BBB.

   In this scenario, the sub-component was changed for the previously installed engine, not the currently installed engine. CAMO does not keep a track of previously installed engines for the purposes of automatically processing this type of out-of-sequence configuration changes. You must update the configuration changes usage on the engine sub-components manually.

CAMO supports backdating of an engine replacement before one or more flights. For example, consider the following scenario:

1. Three flight records AAA, BBB, and CCC are created.
2. Records of removal and installation of an engine are created between flights BBB and CCC.

In this scenario, the removed engine has the standard and accumulated usage parameter values removed, as it was not used for flight CCC. The installed engine has the corresponding standard and accumulated usage parameter values added, as it was used for flight CCC. The calculated usage parameters, based on normal or accumulated parameters, are automatically recalculated for the removed and installed engines.

Reliability notes

One aspect of reliability analysis is the identification and tracking of assets that exhibit recurring problems. When chronic problems are detected, the components identified are flagged and when problems are resolved, flags are removed.

Adding flags in CAMO doesn't affect inventory condition, but serves to notify personnel such as repair routers of the known reliability issues.

In CAMO, you flag problem assets by adding reliability notes to inventory records. A reliability note consists of the note type and text that you enter about the problem. The note type is used to categorize the problem. The two note types available are NOTE and ROGUE, but if your organization requires additional types, they can be configured.

- The NOTE type is for general notes about any type of reliability issue that might exist for an asset.
- The ROGUE type is for assets that have been identified as a rogue part based upon your organization’s established criteria. For example, you might add a reliability note with a type of NOTE after the first instance in which a fault cannot be observed in the shop, but if the part has three consecutive installations that last less than 1000 flying hours each, you might change the note type to ROGUE.

Note types are defined and managed directly in the database, in the REF_RELIABILITY_NOTE_TYPE table. For more information, see the CAMO Administration Guide.

When you add a reliability note to an inventory record, the note is listed on the Inventory Details page, Open tab, Open Reliability Notes sub-tab. Depending on how the notes are configured, the

Inventory Details displays red color warning text across the top of the page. The warning text and whether it is displayed are configurable:

- By default, the ROGUE type displays the warning text: 'This is a rogue part'.
- By default, the NOTE type does not display warning text.

To assist in communicating the existence of reliability notes, the following pages indicate at the top of the page that the inventory has one or more reliability notes.

- Component Work Package Details (indicator text is linked to the inventory's Open Reliability Notes sub-tab).
- Task Details (indicator text is linked to the inventory's Open Reliability Notes sub-tab).
- Raise Fault (indicator text is not linked).

Quality assurance or engineering roles can use the Reliability Note Search to monitor open and historical notes. You can narrow your search by aircraft, part number, config slot, date range note type, note status, and who created or resolved notes. You might use the search results to investigate whether multiple problem parts are from a specific aircraft tail number, if a specific maintenance event corresponds to a rise in removals, or if the problem is associated with a specific flight phase.

If the component fault is finally fixed, or for example, you determine that the fault lies not with the component itself, but with the aircraft or assembly it's installed on, you can resolve the reliability note. A record of the note is kept on the Inventory Details page, Historical tab, Reliability Notes sub-tab.

Maintenix Aviation Analytics can be used to help identify rogue or potentially unreliable inventory items that you might want to flag with reliability notes.

Add a reliability note

To indicate that there are recurring issues with a particular component, you can add a reliability note to its inventory record. You can edit the note as you find more information about the problem.

Steps

1. Go to the **Inventory Details** page, **Open** tab, **Open Reliability Notes** sub-tab.
2. Click **Add Reliability Note**.
3. Select the **Note Type** and add details about the note.
4. Click **OK**.
   If you added a Rogue part type note, the Inventory Details page displays the banner statement: 'This is a rogue part'.

If you need to update the note, go to the Open Reliability Notes sub-tab, select a note from the list and click Edit Reliability Note. You can filter the page to show all notes or notes of specific types.

Resolve a reliability note

When you are satisfied that the root cause of a recurring problem with a component is identified or fixed, you can resolve the reliability note on the inventory record.

Steps

1. Go to the **Inventory Details** page, **Open** tab, **Open Reliability Notes** sub-tab.
2. Select a note from the list and click **Resolve Reliability Note**.
3. Enter information about why you are resolving the note.
4. Click **OK**.

The note is removed from the Open Reliability Notes sub-tab and a record of it is added to the Inventory Details page, Historical tab, Reliability Notes sub-tab.

View reliability notes for an inventory item

As inventory is installed and removed, used and repaired, various people such as inspectors, repair routers, reliability engineers, and others might want to view current or historical reliability notes for the item.

About this task

CAMO can be configured to display a warning note on the Inventory Details page for some open reliability notes, but you can view the details about the note.

Steps

1. To view open reliability notes, go to the **Inventory Details** page, **Open** tab, **Open Reliability Notes** sub-tab.
2. To view historical (resolved) reliability notes, go to the **Inventory Details** page, **Historical** tab, **Reliability Notes** sub-tab.
3. (Optional) Select the note type and date filter options and click **Filter**.

Search reliability notes by part number or config slot

When you search for reliability notes, you can narrow your search by aircraft, part number, config slot, date range note type, note status, and who created or resolved notes. After you search, you can select a note to edit or to resolve, print the list of results, or export the list of search results.

Prerequisite

Your role must be assigned the Reliability Note Search.

Steps

1. On your To Do List menu, click your role, and click **Reliability Note Search**.
2. Enter your search criteria and click **Search**.

Asset record coordination

Asset records may be recorded in multiple external systems outside of CAMO. The Asset Record Coordination (ARC) feature enables you to efficiently import and export an asset's technical records—including asset details, inventory information, configuration data, usage information, open and deferred faults, and historic tasks between external systems and CAMO. The upload request centers around a root asset (aircraft, loose assembly, or loose TRK inventory) and enables the Fleet Configuration Engineer to specify its related configuration (tracked sub-components and sub-assemblies) and associated technical records. The export request provides the current CAMO configuration and maintenance records for an aircraft.

The ability to upload assets can be used through the ARC Message Management UI using a structured XML format or through the programmatic ARC API (see the ARC API Guide for more information). Performing uploads in both the ARC Message Management UI and ARC API requires the same permission setup and configuration. The same business processing logic applies to both ARC upload messages. Exports are performed through the ARC Message Management UI and provide the data using the same XML format as is used in the upload request.

Upload asset records

Introducing a new asset to the fleet is a multi-step process that extends beyond simply receiving a serialized component from a vendor. Upon receipt, all relevant technical data—including part number, serial number, manufacture date, received date, installation date, and current usage—must be accurately entered into CAMO, based on the delivery documentation.

When an asset's configuration or maintenance history is managed in an external system, it is essential to synchronize compliance and technical records between that system and CAMO. This coordination ensures that maintenance planning and execution remain accurate and efficient across platforms.

ARC supports tracked and assembly components, but not serialized or batch components. In Historic Task processing, ARC does not support completed tasks, open faults, inventory details, and inventory usages elements for serialized or batch components.

Setting up ARC Message Management

The following chapter discusses setup and configuration requirements for the ARC feature.

Configuration parameters

The UTL_CONFIG_PARM table contains the parameters that configure the ARC functionality as described in the table below.

ARC configuration parameters

Parameter	Description
ARC_DEFAULT_LOCATION	Set the default location for new assets using the location code.
ARC_DEFAULT_FORECAST_MODEL	Set the default forecast model for new assets using the forecast model code.
ARC_DEFAULT_ISSUE_TO_ACCOUNT	Set the default EXPENSE account for new assets using an account code with account type = EXPENSE.
ARC_DEFAULT_CREDIT_ACCOUNT	Set the default ADJQTY account for new assets using an account code with account type = ADJQTY
ARC_DEFAULT_OWNER	Set the default owner for new assets using their code
CREATE_HISTORIC_TASK_MATCHING_INTERVAL	Set how often (in hours) to compare historic task's completion dates.
MOVE_ACFT_TO_WORK_LOCATION	If TRUE, aircraft moves to work location and prevents attaching components from other locations.
ARC_ALLOW_USAGE_UPDATE_FOR_INREP_ASSET	Allows ARC to modify inventory if there is an in-work work package and the upload request contains only inventory-usage updates.
ALLOW_AUTO_COMPLETION	Allows ARC to complete open AOG faults, overdue tasks, or open work package work items.

Permission settings

All update operations in CAMO performed as part of processing the ARC upload request are recorded as being performed by the logged in user, ensuring traceability. Each ARC action is logged with history notes to indicate that it was performed as part of the ARC process.

To enable ARC functionality, specific action parameters must be configured. Any user who needs access to the ARC Message Management page or ARC API upload actions must be assigned to a role with all required ARC permissions.

For details on configuring permissions, refer to the Maintenix Administration Guide.

ARC action parameters

Category	Permission
API - ARC	API_ARC
API - ASSET	API_CREATE_SERIAL_CONTROLLED_ASSET_REQUEST
SUPPLY - INVENTORY	ACTION_ALLOW_EDIT_RECEIVE_OR_MANUFACTURE_DATE_ON _INVENTORY ACTION_ALLOW_CREATE_EDIT_INV_WITH_FUTURE_MANUFACT_DATE

Category	Permission
API - ADMIN	ACTION_GETINVENTORY API_AIRCRAFT_CORRECT_USAGE_REQUEST API_AIRCRAFT_REQUEST API_ARCHIVE_TRACKED_REQUEST API_ASSET_REQUEST API_ATTACH_SER_REQUEST API_ATTACH_TRACKED_REQUEST API_CREATE_ACFT_REQUEST API_CREATE_USAGE_REQUEST API_DETACH_TRACKED_REQUEST API_TRACKED_CORRECT_USAGE_REQUEST API_UPDATE_ACFT_REQUEST API_EXTEND_DEADLINE_LOGBOOK_FAULT_REQUEST API_UPDATE_OPEN_LOGBOOK_FAULT_REQUEST API_FAULT_SEVERITY_REQUEST API_PRIORITY_REQUEST API_FAULT_SOURCE_REQUEST API_PART_DEFINITION_REQUEST API_OPERATOR_REQUEST API_ASSET_CONDITION_REQUEST API_OWNER_REQUEST API_FINANCE_ACCOUNT_REQUEST API_LOCALE_REQUEST API_MENU_REQUEST

Category	Permission
API - MAINTENANCE	API_CANCEL_LOGBOOK_FAULT_REQUEST API_CREATE_HISTORIC_ADHOC_REQUEST API_CREATE_HISTORIC_BLOCK_REQUEST API_CREATE_HISTORIC_REQ_REQUEST API_CREATE_LOGBOOK_FAULT_REQUEST API_DEFER_MEL_LOGBOOK_FAULT_REQUEST API_DEFER_MINOR_LOGBOOK_FAULT_REQUEST API_FORECAST_MODEL_REQUEST API_LOCATION_REQUEST API_LOGBOOK_FAULT_REQUEST API_MAINT_ENG_PROGRAM_REQUEST API_POSITION_REQUEST API_TASK_REQUEST API_UPDATE_MEL_LOGBOOK_FAULT_REQUEST API_UPDATE_MINOR_LOGBOOK_FAULT_REQUEST

Coordinating asset records

The procedures outlined in this section pertain to managing ARC message files manually using the ARC Message Management page. For information on how to upload asset records using the ARC API, see the ARC API Guide.

Importing asset records

The ARC Message Management page enables you to view the history and status of past uploads and submit new uploads using an XML file. The format of the XML file is specified by the `asset-record-coordination-2.0.xsd` file available with the product documentation.

Review ARC upload history

Steps

1. From the **ARC Message Management** page, click the **Message View** tab.
2. Find the asset that you want to view in the list to view the message status.

3. To view more details about the message status, click the status link.
4. In the **Process Log** dialog, view the message details and the list of errors and warnings to determine what changes are needed for certain records.
5. Optionally, you can add comments and export the list of errors and warnings to a spreadsheet.

   If you are looking for specific messages based on asset name, message status or date range, or have a list of messages that spans several pages, you can filter the list to make it more manageable.
6. From the **ARC Message Management** page, click the **Message View** tab.
7. Do one of the following:
   - Select the **Status** filter options you want to apply to the list.
   - Select the **Date Range** filter options you want to apply to the list.
   - If you want to find messages for a specific asset, type any portion of the asset name in the **Asset** field.
8. Click **Search**.

Perform an ARC upload

About this task

An ARC message XML file can be uploaded manually to CAMO using the ARC Message Management page.

Steps

1. From the **ARC Message Management** page, click the **Upload** tab.
2. Click **Upload File**.
3. From the file browser, navigate to the message XML file that you want to upload, select it and click **Open**.
4. A status message is displayed to let you know when the file has been uploaded.

Exporting asset records

From the ARC Message Management UI Export tab, you can generate an XML file containing the technical records of an aircraft in CAMO. This file follows the same XML schema as used in the import request (`asset-record-coordination-2.0.xsd`) and includes data such as the inventory id, aircraft details, current configuration, inventory details and usages, last-done tasks, and open and deferred faults for the aircraft and all its tracked sub-components (including sub-assemblies).

Export an aircraft

Steps

1. From the **ARC Message Management** page, click the **Export** tab.
2. Type the aircraft registration code in the designated field.
3. Click **Export**.
   The file download starts automatically.

Upload asset processing logic

This section describes how the various elements of the asset-record-coordination message are processed in an upload. Specific details about the schema, which apply to both import and export contexts, are defined in *Mandatory elements*.

When CAMO receives an ARC upload request, first, it performs syntax validation on the asset details and stages them. If staging is successful, it simultaneously notifies the user that the upload was successful and begins validating and processing the asset details in the background. During background processing, it evaluates the content to either create or update technical records for the specified asset and all associated assembly and tracked sub-components. If CAMO identifies a matching asset record, the system updates the existing technical records accordingly. If no matching record exists, CAMO creates a new asset and generates the corresponding technical records for that asset and its sub-components.

The sub-elements are processed in a defined sequence to ensure accurate creation or update of root asset and sub-component records:

1. The `<id>` element for the root asset is processed first. This step identifies whether the upload request targets an existing asset or creates a new one, which determines how subsequent records are validated and processed.
2. If present and the root asset is an aircraft, the `<aircraft-details>` element is processed to update the aircraft specific details.
3. If present, the `<current-configuration>` element is processed next. This step creates or updates sub-inventory items and attaches them to the root asset according to the configuration specified in the message.
4. If present, the `<inventory-details>` element is processed to update the inventory details of the asset and all attached sub-components, ensuring the latest information is captured.
5. If included, the `<inventory-usage>` element is processed to update the current usage for the root asset and attached sub-components.
6. If present, the `<completed-tasks>` element is processed to record historic task instances (blocks, requirements, and ad hoc tasks) against the root asset and its sub-components.
7. Finally, if included, the `<open-faults>` element is processed to create or update open or deferred faults for the root asset and its sub-components, based on information provided in the

message. Any existing faults not referenced in the message may be canceled, ensuring that the asset's fault records accurately reflect the current state.

ARC uploads are processed on a best-effort basis: it attempts to process the entire upload request; it does not stop for minor issues, and it strives to continue processing wherever possible. If it encounters data that is ambiguous or incomplete, it may make reasonable assumptions to fill in missing data, or it may skip a specific element and move to the next.

Completed ARC uploads, whether requested manually or programmatically via the API, are listed on the ARC Message Management page with their processing status. Review the status column to quickly assess each message:

- **Validated**: Indicates that the request was submitted to the validator allowing you to review any findings by clicking the provided link. Depending on how the request was submitted (specifically, some uploads submitted via API), this status may not represent a completed upload; additional findings may still be added as the upload is processed.
- **Processed**: All data in the upload request was imported without issues; no further action is needed.
- **Processed with Warning**: The upload was processed in full, but some data required amendments or assumptions to be made. Click the status link to review detailed logs which will help you identify if any records in CAMO need to be updated.
- **Processed with Error**: The upload was processed in full, but one or more individual elements could not be processed. This may be caused by either conflicting data within the request itself, or between the request and CAMO. These failures are logged, but the rest of the request was processed successfully. Click the status link to review detailed logs which will help you identify any records in either the upload request or in Maintenix that require updates or corrections.
- **Error**: A fatal issue was found that prevented the upload from being fully processed. Processing stopped at the point of failure, and only a portion (or none) of the data was processed. Click the status link to determine whether the issue originated from the upload request, within CAMO, or both, and take corrective action as needed.

Asset Control: To ensure that execution information is not lost, if the root asset has a started work package—the aircraft, assembly, or TRK inventory has a condition of INREP—any ARC messages for that asset are not processed (the upload fails with a status of Error). The ARC message can be sent again when the work package is completed.

Baseline Synchronization: New aircraft, assemblies, and TRK inventory created by ARC do not have baseline synchronization enabled. To include the aircraft, assembly, or TRK inventory in baseline synchronization, you must manually set Allow Synchronization in CAMO.

Id sub-element and the inventory-id type

The `<inventory-id>` is a data type used throughout the asset-record-management message to uniquely identify inventory items, including the root asset and all installed sub-components. At the

root level, it is named simply <id>, but it also appears in sub-elements using other names such as <inventory-id> or other context-specific names. Regardless of the element name, when the <inventory-id> type is used, it always follows the same structure and validation rules. It is composed of the following three mandatory sub-elements:

- <part-no-oem>
- <manufacturer-code>
- <serial-number>

Together, the <part-no-oem> and the <manufacturer-code> define the asset type – such as an aircraft or assembly. The <serial-number> then identifies a unique instance of that asset type. These three elements together form a unique identifier for an inventory item in CAMO.

The <id> element is a root-level element that identifies the asset to be processed and is mandatory in the upload request. If the combination of the three elements maps to an existing inventory in CAMO, that asset will be updated. If the <part-no-oem> and <manufacturer-code> exist but the <serial-number> does not, a new asset will be created. If any of the three sub-elements are missing, or if the <part-no-oem> and <manufacturer-code> do not map to an aircraft or assembly type, the system will treat this as a fatal error and the upload request will not be processed.

Note The element name (e.g., <id>, <inventory-id>) may vary, but if the element is defined using the <inventory-id> type, it must include all three mandatory sub-elements. Always refer to the schema definition to confirm the type associated with each element.

Current configuration element

The <current-configuration> list defines the hierarchy of sub-components installed on the root asset. Each entry in this list is a <position>, which identifies a specific location in the configuration and associates it with an inventory item. ARC supports the configuration of only tracked (ASSY and TRK) sub-components in the hierarchy.

It is not necessary to explicitly define the direct parent of each inventory item. Instead, it is sufficient to specify the position of the sub-component relative to the root asset. This simplifies the representation of complex part hierarchies.

However, when the CAMO solution uses assemblies (e.g. engines or APUs) to represent complex substructures, and a part is installed on a sub-assembly rather than directly on the root asset, the <position> element must include the <inventory-id> of that assembly in the <nh-assembly> identifier. This is required even if there is only one instance of the assembly defined on the root asset (e.g. a single APU).

Each <position> element in the <current-configuration> includes the following three identifiers:

- <id> identifies the baseline position within the asset (either the root asset or a sub-assembly) where inventory is being attached (and/or detached). It contains two sub-elements:
  - The part group code specifies the configuration slot where the inventory is to be installed/removed/replaced.
  - The position name identifies the specific position within the configuration slot. If this element is not provided, CAMO will automatically assign a position.
- <inventoryId> identifies the inventory item occupying the specified position. If no inventory is installed at that position, this element should be left empty.
- <nh-assembly> specifies the intermediate sub-assembly (next-highest assembly) associated with the position. This element is mandatory when the position is defined on a sub-assembly rather than directly on the root asset. It must be left empty when the position is defined directly on the root asset.

Compatibility considerations

To ensure compatibility, the inventory specified in a <position> must belong to a part group that is associated with the corresponding configuration slot in CAMO.

If the inventory's part number is not approved for the specified part group, ARC will still proceed with the installation of the sub-component.

Installation Date support

Each position element also supports an optional <installation><date> sub-element, which allows the installation date of the sub-component to be specified. This enables backdating the installation date of the sub-component to reflect its actual in-service date. If no date is provided and ARC is performing an install, it will use the current system time. Once a sub-component has an installation date recorded in CAMO, ARC will not allow an earlier installation date to be added to the component's history. To ensure accurate historical records, it is recommended either to wait until the correct installation date is known before assigning the inventory to the position, or to use an earlier placeholder date (such as the asset's purchase date) during the initial upload. This approach allows for later updates to a more precise date if needed.

Configuration update logic

ARC applies the following logic when updating the configuration of the asset:

- When creating a new root asset, all mandatory TRK positions will be automatically populated with inventory with serial number XXX. Configuration updates to the <current-configuration> list are then applied on top of this initial structure. In contrast, mandatory ASSY positions are automatically populated only if the sub-assembly inventory is specified in the configuration list.
- For each sub-component in the list:
  - If the specified inventory does not exist in CAMO:

    - If the root asset is being inducted (first upload) and the position is mandatory (thus generated a 'XXX' inventory), the sub-component is directly attached without generating an installation record.
    - If the root asset is being inducted and the position is not mandatory (no 'XXX' inventory was generated), the sub-component is created and installed.
    - If the root asset already exists, the sub-component is created and installed.
- If the sub-component is archived in CAMO, it is unarchived and installed.
- If the sub-component is marked as scrapped in CAMO, it is not installed.
- If the sub-component is locked in CAMO, it is not installed.
- If the sub-component is considered unserviceable in CAMO, it is made serviceable and installed.
- If the sub-component is installed on another asset in CAMO, it is detached and installed on the specified asset. A default sub-component is installed in its place on the original asset.
- If the `<inventory-id>` is not specified in the `<position>`, no inventory will be installed there. If inventory is present, it will be detached.

Completed tasks element

Within the `<completed-tasks>` element, the `<inventory-id>` element references either:

- The identifier provided for the root asset `<id>` element.
- The `inventory-id` element for a sub-component installed on the root element.

For tasks against system, set the `<inventory-id>` element to the next higher physical inventory item.

The `<code>` element is used to search for block and requirement task definitions associated with the specified `<inventory-id>`'s configuration slot.

- If a matching task definition is found, it will be used to create a historic task or to match and update an existing historic task.
- If no matching task definition exists, a new historic ad hoc task will be created using the code as the task name, or the code will be used to match and update an existing historic ad hoc task with the same name.

Tasks are considered matching when all of the following conditions are met:

- They are associated with the same inventory item.
- For tasks based on task definitions, both tasks reference the same task definition.
- For ad hoc tasks, the `<code>` element matches the name of an existing ad hoc task on the same inventory.
- The task completion date falls within the interval specified by the CREATE_HISTORIC_TASK_MATCHING_INTERVAL configuration parameter.

Rules for matching, updating, and creating tasks based on task definition:

- Create a historic Last Done task (recurring): If no matching historic task is found and the provided completion date indicates this is the most recent occurrence (Last Done task in the chain), a historic task is created and task linking is updated.
- Create a historic task (all other cases): If no matching historic task exists and the task is not the most recent (Last Done), a historic task is created.
- No changes: If a matching historic task exists, no changes are made.

Rules for matching, updating, and creating ad hoc tasks:

- Create a new historic ad hoc task: If no matching historic ad hoc task exists, a new one is created.
- No changes: If a matching historic ad hoc task exists, no changes are made.

When providing usages, both the `<parameter>` and `<tsn>` values must be provided for each usage being captured. The specified parameter must already exist for the referenced inventory.

Values for the `tso` and `tsi` sub-elements are optional. The following rules apply to the usage values:

- TSI and TSN Values: If `<tsi>` is greater than `<tsn>`, TSI is set to TSN.
- TSO and TSN Values: If `<tso>` is greater than `<tsn>`, TSO is set to TSN.
- Recurring Task Definition: If a usage parameter is defined in a recurring task definition, and a scheduling rule exists but is not provided, the usage value is set to 0 to reschedule the tasks without giving an error message.

Limitations

ARC has the following limitations related to Historic Task processing:

- Part transformation (i.e. MOD tasks) is not supported.
- Only requirements and blocks are processed. Job cards for requirements are not created or completed.
- Completed requirements and blocks are created independently, and are not linked together.
- Block chains are not supported.

Open faults element

The values provided for the mandatory sub-elements of the `<open-faults>` element are compared against the data in CAMO. The following rules apply when open or deferred faults are processed:

- Faults with an empty logbook reference aren't processed and produce an error.
- Matching faults: Faults are matching when inventory + system (where applicable) and logbook reference match.

- Updating existing faults: If an open or deferred fault already exists, it gets updated with the new values provided.
- Creating new faults: If no matching open or deferred fault is found, a new one is created with the provided values.
- Canceling unreferenced faults: Any open or deferred faults in CAMO against the asset that do not have a corresponding entry in the upload request are marked as No Fault Found (NFF), except for those related to detached components, which remain open. This means that faults on sub-components that are replaced (i.e. detached and replaced) as part of the current configuration updates will not be updated.
- No comparison without <open-faults>: If the <open-faults> element is missing, or contains a 0-length list, fault processing is bypassed and any existing faults remain unchanged.
- Default Values: If the <source> or <severity> sub-elements are missing, default values of "MESSAGE" and "UNKNOWN" are used, respectively.

A fault is given a status of deferred if the <severity> sub-element value has a type of "MINOR" or "MEL." Deferred faults conform to the following rules:

- Deferred MINOR faults: No extra values are needed for <due-date>, <deferral-class>, or <deferral-reference>. If provided, they are ignored.
- Deferred MEL faults: Must include values for <due-date>, <deferral-class>, and <deferral-reference>. Missing any of these will result in an error. The due-values sub-element can be included but it's not required.
- Severity changes:
  - Changing from MEL to MINOR: Existing values for <due-date>, <deferral-class>, <deferra-reference>, and <due-values> are set to null.
  - Changing from MINOR to MEL: Must include values for <due-date>, <deferral-class>, and <deferral-reference>.
- Status changes: Deferred faults cannot be changed to open faults. A fault is considered open if its severity is AOG or UNKNOWN.

<extension> values are only applied to a deferred fault with a severity value of type MEL. If <due-values> are provided for the extension sub-element in the message, the <parameter-code> sub-element must match a corresponding parameter value in the referenced deferred MEL fault.

All usages provided must include a valid parameter and TSN value. If the provided usage parameter does not exist in CAMO, or is not tracked by the inventory or configuration slot on which the fault is raised, it is ignored. This applies to <usages-when-found>, <due-values>, and <extension>.

Inventory usages element

The inventory usages element is used to set the current usages on the root asset and its sub-components. The values provided in the upload request are applied to each inventory item as if editing the current usage of the component. It does not add a usage record.

The <parameter> referenced in the <usage> section of the message must already exist for the referenced inventory in CAMO and must be accompanied by a <tsn> value. Values for the <tsi> and <tso> sub-elements are optional. The following rules apply to the usage parameters and values:

- Invalid usages: Invalid or non-existent usages in the message are skipped, but valid ones are processed.
- Usage correction: Usage corrections are applied to the specified asset (aircraft, assembly, or tracked sub-component).
- Cascading values: When a usage correction is applied to an aircraft or assembly, the same values are applied to all its systems.
- TSI and TSN values: If <tsi> is greater than <tsn>, TSI is set to TSN.
- TSO and TSN values: If <tso> is greater than <tsn>, TSO is set to TSN.

Inventory details element

The following rules apply to the <inventory-details> element:

- Operator check: The <operator> must already exist in CAMO, if included.
- Aircraft and assembly assets only: The <operator> and <applicability-code> are only for aircraft and ASSY-class assets. If used for sub-components, a warning is given, and the values are ignored.
- Date requirements: If the root asset or sub-component task has a scheduling rule based on manufacture or received dates, you must provide <manufactured-date> and/or <received-date>. Otherwise, an error is reported.
- Original equipment: It must correspond to an existing inventory in Maintenix or one specified in the ARC upload message
- If no value is provided for an element (i.e., the element is missing or its value is empty or contains only whitespace), the existing value will remain unchanged.

Mandatory elements

The following table displays the mandatory top-level elements for the asset_record_coordination message in each supported scenario.

The following keys are used:

- **M** indicates that the element is mandatory.

- **D** indicates that the element, if provided, depends on the existence of corresponding data or reference terms in CAMO.
- **U** indicates that the element, if provided, must be unique within CAMO.

Element	Scenario	
	Updating an existing asset	Creating a new asset
<id>	M, D, U	M, D, U
<aircraft-details>	M	M
<current-configuration>	M	M
<inventory-details>	M	M
<inventory-usage>	M	M
<completed-tasks>	M	M
<open-faults>	M	M

For specific details on the mandatory sub-elements contained within each element, refer to the specific sub-element section.

ID mandatory sub-elements

All of the sub-elements in the <id> element are mandatory.

<id> sub-element	Scenario	
	Updating an existing asset	Creating a new asset
<id> <inventory-id> <part-no-oem>	M, D	M, D
<id> <inventory-id> <manufacturer-code>	M, D	M, D
<id> <inventory-id> <serial-number>	M, D	M, U

Aircraft details mandatory sub-elements

The <aircraft-details> element contains the following mandatory sub-elements.

<aircraft-details> sub-element	Scenario	
	Updating an existing asset	Creating a new asset
<aircraft-details> <registration-code>	M	M, U

Current configuration mandatory elements

The <current-configuration> element contains the following mandatory sub-elements.

<current-configuration> sub-element	Scenario	
	Updating an existing asset	Creating a new asset
<current-configuration> <position> <id>	M, D	M, D
<current-configuration> <position> <id> <part-group-code>	M, D	M, D

Completed tasks mandatory sub-elements

Although the <completed-tasks> element is optional, if it is included in the ARC message, the following sub-elements are mandatory.

<completed-tasks> sub-element	Scenario	
	Updating an existing asset	Creating a new asset
<completed-tasks> <completed-task> <inventory-id> <part-no-oem>	M, D	M, D
<completed-tasks> <completed-task> <inventory-id> <manufacturer-code>	M, D	M, D
<completed-tasks> <completed-task> <inventory-id> <serial-number>	M, D	M
<completed-tasks> <completed-task> <code>	M	M

<completed-tasks> sub-element	Scenario	
	Updating an existing asset	Creating a new asset
<completed-tasks> <completed-task> <completion-date>	M	M
<completed-tasks> <completed-task> <usages-at-completion> <usage><parameter>	M	M
<completed-tasks> <completed-task> <usages-at-completion> <usage> <tsn>	M	M

Open faults mandatory sub-elements

Although the <open-faults> element is optional, if it is included in the ARC message, the following sub-elements are mandatory.

<open-faults> sub-element	Scenario	
	Updating an existing asset	Creating a new asset
<open-faults> <fault> <inventory-id> <part-no-oem>	M, D	M, D
<open-faults> <fault> <inventory-id> <manufacturer-code>	M, D	M, D
<open-faults> <fault> <inventory-id> <serial-number>	M, D	M
<open-faults> <fault> <failed-system>	M, D	M, D
<open-faults> <fault> <name>	M	M
<open-faults> <fault> <found-on-date>	M	M
<open-faults> <fault> <deferral-class>	M	M

<open-faults> sub-element	Scenario	
	Updating an existing asset	Creating a new asset
<open-faults> <fault> <severity>	M	M
<open-faults> <fault> <due-date>	M	M
<open-faults> <fault> <due-values> <due> <parameter-code>	M	M
<open-faults> <fault> <due-values> <due> <value>	M	M
<open-faults> <fault> <deferral-reference>	M	M
<open-faults> <fault> <extension> <due-date>	M	M
<open-faults> <fault> <extension> <due-values> <due> <parameter-code>	M, D	M, D
<open-faults> <fault> <extension> <due-values> <due> <value>	M, D	M, D

Inventory usage mandatory sub-elements

The <inventory-usage> element contains the following mandatory sub-elements.

<inventory-usage> sub-element	Scenario	
	Updating an existing asset	Creating a new asset
<inventory-usages> <inventory-usage> <inventory-id> <part-no-oem>	M, D	M, D
<inventory-usages> <inventory-usage> <inventory-id> <manufacturer-code>	M, D	M, D

<inventory-usage> sub-element	Scenario	
	Updating an existing asset	Creating a new asset
<inventory-usages> <inventory-usage> <inventory-id> <serial-number>	M, D	M
<inventory-usages> <inventory-usage> <usages> <usage> <parameter>	M	M
<inventory-usages> <inventory-usage> <usages> <usage> <tsn>	M	M

Inventory details mandatory sub-elements

The <inventory-details> element contains the following mandatory sub-elements.

<inventory-details> sub-element	Scenario	
	Updating an existing asset	Creating a new asset
<inventory-details> <details> <inventory-id> <part-no-oem>	M, D	M, D
<inventory-details> <details> <inventory-id> <manufacturer-code>	M, D	M, D
<inventory-details> <details> <inventory-id> <serial-number>	M, D	M

Mapping elements to CAMO

The following table displays the corresponding field in the CAMO user interface for each of the `inventory-issued-to` message elements.

Element	Corresponding entry in CAMO GUI
<id> <inventory-id> <part-no-oem>	Inventory Details page. Inventory group box, OEM Part Number field

Element	Corresponding entry in CAMO GUI
<id> <inventory-id> <manufacturer-code>	Inventory Details page. Inventory group box, Manufacturer field
<id> <inventory-id> <serial-number>	Inventory Details page. Inventory group box, OEM Serial No field
<aircraft-details> <registration-code>	Inventory Details page. Details tab, Aircraft Information section, Registration Code field
<aircraft-details> <capability>	Inventory Details page. Details tab, Aircraft Information section, Capability field
<aircraft-details> <country>	Inventory Details page. Details tab, Aircraft Information section, Country field
<aircraft-details> <regulatory-body>	Inventory Details page. Details tab, Aircraft Information section, Regulatory Body field
<aircraft-details> <variable-number>	Inventory Details page. Details tab, Aircraft Information section, OEM Variable No field
<aircraft-details> <line-number>	Inventory Details page. Details tab, Aircraft Information section, OEM Line No field
<current-configuration> <position> <id> <part-group>	Inventory Details page. Details tab, Inventory Information section, Part Group field
<current-configuration> <position> <id> <position-name>	Inventory Details page. Sub Inventory tab, Position column
<current-configuration> <position> <inventory-id> <part-no-oem>	Inventory Details page. Sub Inventory tab, Part No column
<current-configuration> <position> <inventory-id> <manufacturer-code>	Inventory Details page. Inventory group box, Manufacturer field
<current-configuration> <position> <inventory-id> <serial-number>	Inventory Details page. Sub Inventory tab, Serial No column
<current-configuration> <position> <nh-assembly><manufacturer>	Inventory Details page. Inventory group box, Manufacturer field
<current-configuration> <position> <part-no-oem>	Inventory Details page. Inventory group box, OEM Part Number field

Element	Corresponding entry in CAMO GUI
<current-configuration> <position> <serial-number>	Inventory Details page. Inventory group box, OEM Serial No field
<current-configuration> <position> <installation> <date>	Inventory Details page. Historical tab, Installation tab, Event Date column
<completed-tasks> <completed-task> <inventory-id> <part-no-oem>	Inventory Details page. Inventory group box, OEM Part Number field
<completed-tasks> <completed-task> <inventory-id> <manufacturer-code>	Inventory Details page. Inventory group box, Manufacturer field
<completed-tasks> <completed-task> <inventory-id> <serial-number>	Inventory Details page. Inventory group box, OEM Serial No field
<completed-tasks> <completed-task> <code>	Task Details page. Task title
<completed-tasks> <completed-task> <action>	Task Details page. Task Execution tab, Action section
<completed-tasks> <completed-task> <completion-date>	Task Details page. Task Information tab, Task Information section, Actual End Date field
<completed-tasks> <completed-task> <usages-at-completion>	Task Details page. History tab, Usage At Completion section
<completed-tasks> <completed-task> <document-reference>	Task Details page. Task Information tab, Technical References section
<open-faults> <fault> <inventory-id> <part-no-oem>	Inventory Details page. Inventory group box, OEM Part Number field
<open-faults> <fault> <inventory-id> <manufacturer-code>	Inventory Details page. Inventory group box, Manufacturer field
<open-faults> <fault><inventory-id> <serial-number>	Inventory Details page. Inventory group box, OEM Serial No field
<open-faults> <fault> <failed-system>	Task Details page. Fault Information tab, Fault Details section, Config Slot field
<open-faults> <fault> <name>	Task Details page. Task title
<open-faults> <fault> <description>	Edit Fault page. Fault Registration section, Fault Description field

Element	Corresponding entry in CAMO GUI
<open-faults> <fault> <logbook-reference>	Task Details page. Details group box, Logbook Reference field
<open-faults> <fault> <source>	Task Details page. Fault Information tab, Fault Details section, Fault Source field
<open-faults> <fault> <found-on-date>	Task Details page. Fault Information tab, Fault Details section, Found On Date field
<open-faults> <fault> <usages-when-found>	Task Details page. History tab, Usages When Found section
<open-faults> <fault> <deferral-class>	Task Details page. Fault Information tab, Fault Details section, Deferral Class field
<open-faults> <fault> <severity>	Task Details page. Fault Information tab, Fault Details section, Fault Severity field
<open-faults> <fault> <due-date>	Task Details page. Task Information tab, Task Information section, Scheduled End Date field
<open-faults> <fault> <due-values> <due> <parameter-code>	Task Details page. Scheduling tab, Due section, Parameter column
<open-faults> <fault> <due-values> <due> <value>	Task Details page. Scheduling tab, Due section, Interval column
<open-faults> <fault> <deferral-reference>	Task Details page. Fault Information tab, Fault Details section, Deferral Reference field
<open-faults> <fault> <priority>	Task Details page. Task Information tab, Task Information section, Priority field
<open-faults> <fault> <extension> <due-date>	Task Details page. Scheduling tab, Due section, Est. Date column
<open-faults> <fault> <extension> <due-values> <due> <parameter-code>	Task Details page. Scheduling tab, Due section, Parameter column
<open-faults> <fault> <extension> <due-values> <due> <value>	Task Details page. Scheduling tab, Due section, Interval column
<open-faults> <fault> <extension> <reference-number>	Task Details page. History tab, History section, Note column

Element	Corresponding entry in CAMO GUI
<open-faults> <fault> <extension> <note>	Task Details page. History tab, History section, Note column
<open-faults> <fault> <document-reference>	Task Details page. Task Information tab, Technical References section, Document Reference field
<inventory-usages> <inventory-usage> <inventory-id> <part-no-oem>	Inventory Details page. Inventory group box, OEM Part Number field
<inventory-usages> <inventory-usage> <inventory-id> <manufacturer-code>	Inventory Details page. Inventory group box, Manufacturer field
<inventory-usages> <inventory-usage> <inventory-id> <serial-number>	Inventory Details page. Inventory group box, OEM Serial No field
<inventory-usages> <inventory-usage> <usages> <usage> <parameter>	Inventory Details page. Details tab, Current Usage section, Usage Parm column
<inventory-usages> <inventory-usage> <usages> <usage> <tsn>	Inventory Details page. Details tab, Current Usage section, TSN column
<inventory-usages> <inventory-usage> <usages> <usage> <tso>	Inventory Details page. Details tab, Current Usage section, TSO column
<inventory-usages> <inventory-usage> <usages> <usage> <tsi>	Inventory Details page. Details tab, Current Usage section, TSI column
<inventory-details> <inventory-id> <part-no-oem>	Inventory Details page. Inventory group box, OEM Part Number field
<inventory-details> <inventory-id> <manufacturer-code>	Inventory Details page. Inventory group box, Manufacturer field
<inventory-details> <inventory-id> <serial-number>	Inventory Details page. Inventory group box, OEM Serial No field
<inventory-details> <manufactured-date>	Inventory Details page. Details tab, Inventory Information section, Manufactured Date field
<inventory-details> <received-date>	Inventory Details page. Details tab, Inventory Information section, Received Date field
<inventory-details> <applicability-code>	Inventory Details page. Details tab, Inventory Information section, Applicability Code field

Element	Corresponding entry in CAMO GUI
<inventory-details> <release-number>	Inventory Details page. Details tab, Inventory Information section, Release Number field
<inventory-details> <operator>	Inventory Details page. Details tab, Inventory Information section, Operator field
<inventory-details> <original-equipment> <manufacturer-code>	Inventory Details page. Inventory group box, Manufacturer field
<inventory-details> <original-equipment> <part-no-oem>	Inventory Details page. Inventory group box, OEM Part Number page
<inventory-details> <original-equipment> <serial-number>	Inventory Details page. Inventory group box, OEM Serial No page

Upload errors

On receipt of the request, ARC will verify whether it is structurally correct. If it contains structural issues—such as invalid XML formatting or missing mandatory elements—it will be rejected without further validation or processing. These errors must be corrected before the upload request can proceed.

Asset record coordination upload results

As the ARC feature validates and processes sub-components, it generates a validation log. Each entry in the log provides the severity, a descriptive message, and a reference to the type of request element associated with the issue. This reference helps users locate the specific part of the request that triggered the finding. The tables below identify the findings that ARC may report while handling an upload. Because ARC handles upload requests in two distinct phases – validation and processing - the tables also indicate the associated phase for each finding.

Severity:

- SUCCESS
- INFO
- WARNING
- ERROR

Note Findings with a severity of INFO are not displayed on the ARC Process Log screen so that users can focus on warnings and errors that require attention, but such findings are returned by the ARC API.

Validation log

Phase	Severity	Description
Processing	ERROR	The value for the configuration parameter {0} is missing in Maintenix. Ensure the parameter is set to a valid asset condition code and resend the message.
Processing	ERROR	The value {0} for the configuration parameter {1} is invalid in Maintenix. Ensure the parameter is set to a valid asset condition code and resend the message.
Processing	ERROR	The value for the configuration parameter {0} is missing in Maintenix. Ensure the parameter is set to a valid account code and resend the message.
Processing	ERROR	The value {0} for the configuration parameter {1} is invalid in Maintenix. Ensure the parameter is set to a valid account code and resend the message.
Processing	ERROR	The value for the configuration parameter {0} is missing in Maintenix. Ensure the parameter is set to a valid forecast model name and resend the message.
Processing	ERROR	The value {0} for the configuration parameter {1} is invalid in Maintenix. Ensure the parameter is set to a valid forecast model name and resend the message.
Processing	ERROR	The value for the configuration parameter {0} is missing in Maintenix. Ensure the parameter is set to a valid account code and resend the message.
Processing	ERROR	The value {0} for the configuration parameter {1} is invalid in Maintenix. Ensure the parameter is set to a valid account code and resend the message.
Processing	ERROR	The value for the configuration parameter {0} is missing in Maintenix. Ensure the parameter is set to a valid location code and resend the message.

Phase	Severity	Description
Processing	ERROR	The value {0} for the configuration parameter {1} is invalid in Maintenix. Ensure the parameter is set to a valid location code and resend the message.
Processing	ERROR	The value for the configuration parameter {0} is missing in Maintenix. Ensure the parameter is set to a valid owner code and resend the message.
Processing	ERROR	The value {0} for the configuration parameter {1} is invalid in Maintenix. Ensure the parameter is set to a valid owner code and resend the message.

Phase	Severity	Description
Validation	ERROR	A registration code was not provided for aircraft {0}/{1}:{2}. As a result, the aircraft was not created in Maintenix. Correct the message to include the registration code and resend it.
Validation	ERROR	A work package exists on aircraft {0}/{1}:{2} that has a status of In Work. While a work package is in progress, updates to the aircraft cannot be made. As a result, the message was not processed.
Validation	ERROR	The same inventory {0}/{1}:{2} is included in multiple elements for multiple assets. As a result, the inventory was not processed for any asset. Ensure that the inventory is associated with only one asset in the message and resend it.
Validation	ERROR	The part number {0} and manufacturer {1} combination does not match a valid part number in Maintenix. As a result, the assets for the part number were not updated. Correct the part number and manufacturer, and resend the message. If necessary, create the records in Maintenix.
Validation	ERROR	The part number {0}/{1} has an unsupported inventory class {2}. As a result, the assets for this part number were not processed. Supported inventory classes include ACFT, ASSY, and TRK. Remove the assets from the message, or update the inventory class in Maintenix.

Phase	Severity	Description
Validation	ERROR	Inventory {0}/{1}:{2} is specified multiple times in the message. As a result, the configuration was not updated in Maintenix. Correct the message to reference the inventory only once and resend the message.
Validation	ERROR	Inventory {0}/{1}:{2} is marked as scrapped in Maintenix. As a result, the configuration was not updated with this inventory. Correct the message to remove all references to scrapped inventory and resend it.
Validation	ERROR	Inventory {0}/{1}:{2} is locked in Maintenix. As a result, the configuration was not updated in Maintenix.
Validation	ERROR	Inventory {0}/{1}:{2} specified for the NH assembly does not have an inventory class of assembly. The NH assembly is only required when sub-inventory is installed on a sub-assembly. As a result, the configuration was not updated for the specified position. Update the message to either remove the NH assembly or to reference an inventory with the assembly inventory class.
Validation	ERROR	The position {0} does not exist for {1} assembly. As a result, the configuration updates cannot be processed for this position. Add the position to the assembly in Maintenix and resend the message.
Validation	ERROR	The position {0} is specified multiple times in the message. As a result, the configuration was not updated in Maintenix. Correct the message to reference the position only once and resend the message.
Validation	ERROR	Part number {0}/{1} does not belong to part group {2}/{3}. As a result, the configuration was not updated. Add the part number to the part group in Maintenix and resend the message.
Validation	ERROR	An installation date of inventory {0}/{1}:{2} is later than the installation date {3} that was provided in the message. Therefore, the configuration was not updated in Maintenix. Correct the message to use the last installation date of the inventory and resend the message.

Phase	Severity	Description
Validation	ERROR	Inventory {0}/{1}:{2} is not installed on the asset identified in the message. As a result, it was not updated. Update the message to correct the asset and resend it.
Validation	ERROR	The task code {0} on inventory {1}/{2}:{3} has multiple entries specified within the top level asset. As a result, a completed task was not created. Correct the task code and resend the message.
Validation	ERROR	The usage parameter code {0} specified for task {1} on inventory {2}/{3}:{4} has a negative usage value. As a result, the task was not processed. Correct the usage for the task in the message and resend it, or correct the task in Maintenix.
Validation	ERROR	Asset {0}/{1}:{2} has multiple matching entries for inventory {3}/{4}:{5}. As a result, the asset was not processed. Remove all duplicate inventory details, and resend the message.
Validation	ERROR	Fault {0} for {1}/{2}:{3} requires that you specify the failed system, but it was not included in message. As a result, the fault was not processed. Update the message to include the failed system code and resend it.
Validation	ERROR	The due parameter code {0} specified on Fault {1} for {2}/{3}:{4} was provided multiple times in the message. As a result, the fault was not processed. Correct the parameter in the message and resend it.
Validation	ERROR	Fault {0} for {1}/{2}:{3} requires a deferral class, but it was not included in the message. As a result, the fault was not processed. Update the message to include the deferral class and resend it.
Validation	ERROR	Fault {0} for {1}/{2}:{3} requires a deferral reference, but it was not included in the message. As a result, the fault was not processed. Update the message to include the deferral reference and resend it.
Validation	ERROR	Fault {0} for {1}/{2}:{3} requires a deferral due date, but it was not included in the message. As a result, the fault was not processed. Update the message to include the due date and resend it.

Phase	Severity	Description
Validation	ERROR	The open fault {0} for {1}/{2}:{3} has an invalid parameter {4} on the deadline extension. As a result, the fault was not processed. The message must be corrected and resend the message.
Validation	ERROR	Fault {0} for {1}/{2}:{3} is specified multiple times in the message. As a result, the configuration was not updated in Maintenix. Correct the message to reference the fault only once and resend the message.
Validation	ERROR	The usage parameter code {0} specified on inventory {1}/{2}:{3} was provided multiple times in the message. As a result, usage values were not applied to the inventory. You can only specify a usage parameter once per inventory. Correct the usage in the message and resend it, or correct the usage in Maintenix.
Validation	ERROR	The usage parameter code {0} specified on inventory {1}/{2}:{3} has a negative usage value. As a result, the usage was not applied to the inventory. Correct the usage in the message and resend it, or correct the usage in Maintenix.
Validation	WARNING	The capability specified for aircraft {0}/{1}:{2} does not exist in Maintenix. As a result, a capability was not added. A valid capability must be provided in the message. If this is a new capability, add it to the standard reference terms for Maintenix. Make the appropriate corrections and resend the message.
Validation	WARNING	The part number {0} and manufacturer {1} combination is not approved in Maintenix; however, the assets for the part number were updated. Approve the part number in Maintenix, or correct the configuration.
Validation	WARNING	Inventory {0}/{1}:{2} is unserviceable with a condition of {3}. The inventory was made serviceable in Maintenix and attached as specified in the message. Review the inventory record in Maintenix to ensure that it is correct.
Validation	WARNING	Part number {0}/{1} is not approved for part group {2}/{3}. The configuration was updated in Maintenix. Review the part group approval in Maintenix and make corrections as needed.

Phase	Severity	Description
Validation	WARNING	The TSO value specified is greater than the TSN value for usage parameter {0} on inventory {1}/{2}:{3} and task code {4}. As a result, the TSO was set as equal to the TSN for this usage parameter. Verify the task usage in Maintenix and make corrections if necessary.
Validation	WARNING	The TSI value specified is greater than the TSN value for usage parameter {0} on inventory {1}/{2}:{3} and task code {4}. As a result, the TSI was set as equal to the TSN for this usage parameter. Verify the task usage in Maintenix and make corrections if necessary.
Validation	WARNING	The manufacture date {3} for inventory {0}/{1}:{2} was set in the future. As a result, the default date was set in Maintenix. Ensure that the manufacture date on the inventory is set correctly in Maintenix.
Validation	WARNING	The received date {3} for inventory {0}/{1}:{2} was set in the future. As a result, the received date was modified to occur immediately after the manufactured date in Maintenix. Ensure that the received date on the inventory is set correctly in Maintenix.
Validation	WARNING	The received date {4} was set earlier than the manufactured date {3} for inventory {0}/{1}:{2}. As a result, the received date was modified to occur after the manufacture date in Maintenix. Ensure that the received date on the inventory is set correctly in Maintenix.
Validation	WARNING	Applicability codes are not valid for tracked or serialized inventory. As a result, applicability code {0} was ignored on inventory {1}/{2}:{3}.
Validation	WARNING	Operator codes are not valid for tracked or serialized inventory. As a result, operator code {0} was ignored on inventory {1}/{2}:{3}
Validation	WARNING	The original equipment of aircraft inventory {0}/{1}:{2} cannot be updated by ARC since ARC does not support updating an aircraft's original equipment.

Phase	Severity	Description
Validation	WARNING	The original equipment of the inventory {0}/{1}:{2} cannot be updated to reference {3}/{4}:{5} because that inventory does not exist in Maintenix or in the message.
Validation	WARNING	Fault {0} for {1}/{2}:{3} includes the failed system in the message, but it is not required. As a result, the failed system is ignored and the fault is processed.
Validation	WARNING	Fault {0} for {1}/{2}:{3} does not require the deferral class. As a result, the fault was processed and the deferral class was ignored.
Validation	WARNING	Fault {0} for {1}/{2}:{3} does not require the deferral reference. As a result, the fault was processed and the deferral reference was ignored.
Validation	WARNING	Fault {0} for {1}/{2}:{3} does not require the deferral due date. As a result, the fault was processed and the deferral due date was ignored.
Validation	WARNING	Fault {0} for {1}/{2}:{3} does not require the deferral due values. As a result, the fault was processed and the deferral due values were ignored.
Validation	WARNING	Fault {0} for {1}/{2}:{3} does not require the deferral extension due values. As a result, the fault was processed and the deferral extension due values were ignored.
Validation	WARNING	The specified fault source code {0} for the fault {1} does not exist in Maintenix. As a result, a default value {2} is used.
Validation	WARNING	The specified fault severity code {0} for the fault {1} does not exist in Maintenix. As a result, a default value {2} is used.
Validation	WARNING	The specified task priority code {0} for fault {1} does not exist in Maintenix. As a result, the priority code is ignored.
Validation	WARNING	The usage parameter code {0} specified for fault {1} on inventory {2}/{3}:{4} has a negative usage value. As a result, the usage parameter was not applied to the fault. Correct the usage and resend the message.

Phase	Severity	Description
Validation	WARNING	The TSO value specified is greater than the TSN value for usage parameter {0} on inventory {1}/{2}:{3}. As a result, the TSO was set as equal to the TSN for this usage parameter. Verify the inventory usage in Maintenix and make corrections as necessary.
Validation	WARNING	The TSI value specified is greater than TSN value for usage parameter {0} on inventory {1}/{2}:{3}. As a result, the TSI was set as equal to TSN for this usage parameter. Verify the inventory usage in Maintenix and make corrections as necessary.

Phase	Severity	Description
Processing	SUCCESS	Asset {0}/{1}:{2} was created.
Processing	SUCCESS	The asset was processed successfully.
Processing	INFO	Aircraft Asset for {0}/{1}:{2} was updated successfully.
Processing	WARNING	Operator {3} does not exist in Maintenix. As a result, the operator was not set on {0}/{1}:{2}. A valid operator must be provided in the message. If this is a new operator, add it to Maintenix. Make the appropriate corrections and resend the message.
Processing	ERROR	Could not create the asset {0}/{1}:{2}: {3}
Processing	ERROR	Could not update aircraft asset for {0}/{1}:{2}. Reason: {3}
Processing	ERROR	Inventory {0}/{1}:{2} is not installed on the asset identified in the message. As a result, it was not updated. Update the message to correct the asset and resend it.
Processing	INFO	Inventory Details for {0}/{1}:{2} was updated successfully.
Processing	ERROR	Inventory Details for {0}/{1}:{2} could not be updated: The asset was not found.
Processing	ERROR	Could not update inventory for {0}/{1}:{2}. Reason: {3}
Processing	WARNING	The original equipment of inventory {0}/{1}:{2} cannot be updated to reference {3}/{4}:{5} because that inventory does not exist in Maintenix.

Phase	Severity	Description
Processing	INFO	Aircraft Usage for {0}/{1}:{2} was corrected successfully.
Processing	INFO	Inventory Usage for {0}/{1}:{2} was corrected successfully.
Processing	WARNING	The usage parameter code {0} is not applicable on inventory {1}/{2}:{3}. As a result, this usage parameter was ignored for the inventory. Verify the inventory usage in Maintenix, and correct if necessary.
Processing	ERROR	Inventory {0}/{1}:{2} cannot be found in Maintenix.
Processing	ERROR	Aircraft Usage for {0}/{1}:{2} could not be corrected: {3}.
Processing	ERROR	Inventory Usage for {0}/{1}:{2} could not be corrected: {3}.
Processing	INFO	A completed ad hoc task {0} for inventory {1}/{2}:{3} already exists. As a result, an additional completed task was not created.
Processing	INFO	A completed block {3} for inventory {0}/{1}:{2} already exists. As a result, an additional completed block was not created.
Processing	INFO	A completed block {3} for inventory {0}/{1}:{2} was created successfully.
Processing	INFO	A completed requirement task {3} for inventory {0}/{1}:{2} already exists in Maintenix.
Processing	INFO	The completed requirement task {3} for inventory {0}/{1}:{2} was created successfully.
Processing	WARNING	A task definition with code {0} cannot be found. A completed ad hoc task {0} for inventory {1}/{2}:{3} was created successfully.
Processing	WARNING	{4} The completed task for inventory {0}/{1}:{2} and code {3} was created, but the usage parameter was ignored. Verify the usage in Maintenix, and make corrections as necessary.
Processing	ERROR	A completed task for inventory {0}/{1}:{2} with code {3} could not be created. Reason: {4}.
Processing	ERROR	Task definition {3} has an invalid revision. As a result, a completed task for inventory {0}/{1}:{2} was not created.
Processing	ERROR	Task definition {3} has an invalid status {4}. As a result, a completed task for inventory {0}/{1}:{2} was not created.

Phase	Severity	Description
Processing	ERROR	A completed block {3} for inventory {0}/{1}:{2} could not be created. Reason: {4}.
Processing	ERROR	Usages at Completion is missing usage parameters for recurring task. Completed Task for inventory {0}/{1}:{2} and code {3} could not be created. Reason: {4}
Processing	ERROR	The completed requirement task {3} for inventory {0}/{1}:{2} could not be created. Reason: {4}
Processing	ERROR	Inventory {0}/{1}:{2} is not included in the message and does not already exist in Maintenix. As a result, the task with code {3} could not be created.
Processing	INFO	Open fault {0} for inventory {1}/{2}:{3} was created successfully.
Processing	INFO	Open fault {0} for inventory {1}/{2}:{3} was updated successfully.
Processing	INFO	Open fault {0} was canceled successfully.
Processing	ERROR	Fault {0} on inventory {1}/{2}:{3} could not be created. Reason: {4}
Processing	ERROR	Fault {0} on inventory {1}/{2}:{3} could not be updated. Reason: {4}
Processing	ERROR	Open fault {0} was not included in the message. The attempt to cancel the fault was unsuccessful. Reason: {1}

Asset record coordination message alerts

The following alerts are ARC specific and are sent to users who have the role specified for the alert. For information on configuring these alerts for specific user roles, refer to the *Maintenix Administration Guide*.

ARC message alerts

Alert Name	Category	Description
ARC Message Processed Successfully	ARC	The ARC message was processed successfully.

Alert Name	Category	Description
ARC Message Processed with Warnings/Errors	ARC	The ARC message was processed successfully, however, some errors or warnings were encountered during processing.
ARC Message Failed	ARC	The ARC message encountered an error during processing.
ARC Message Schema Validation Error	ARC	A schema validation error was encountered during ARC message processing.

Purging ARC upload messages

To avoid large numbers of unnecessary ARC messages from accruing in the system, CAMO has a record purging feature that consists of a background job, and a set of purging policies. The purging job, MX_COMMON_PURGE_RECORDS, is active by default. It is scheduled to run every midnight, to delete and archive data from CAMO. The ARC messages are purged according to the purging policies that are defined in the UTL_PURGE_POLICY table.

Prior to deleting an ARC message, the purging job can archive it to an archive table, if one is defined. Although the purge engine can support archiving of data before purging, by default it is not configured.

Note It is important that the structure of your archive table matches that of the original table, because the archive table is a column-for-column copy of the records.

Configuring the ARC message purging policy

By default, the ARC_RECORDS purging policy is enabled. This policy purges all ARC messages after the default retention period of 90 days.

CAMO has one purging policy for purging ARC messages, defined by the record with PURGE_POLICY_CD= ARC_RECORDS in table UTL_PURGE_POLICY in the CAMO database.

- To enable or disable the purging of ARC messages, update the ACTIVE_BOOL column. Default= TRUE (Enabled).
- To change the purging period, update the RETENTION_PERIOD column. Default= 90 (Days).

Note To add new purging policies or make policy modifications to columns other than the Active Bool and the Retention Period, contact your CAMO Account Representative.

Engineering assistance requests

Responding to requests for engineering assistance

Technicians working on a maintenance visit might come across a task or a non-routine that does not include or provide the correct technical information to complete the work. When this occurs, they can request engineering assistance for the task. CAMO lists these tasks on a to-do list accessible by users who have engineering skills.

To respond to these requests, do the following:

- Find the task or non-routine, and review the information it includes.
- Add the information that you deem necessary and helpful for the technician to complete the task—such as instructions, labor requirements, part requirements, tool requirements, measurements, zone and panel information, technical references, and/or attachments.
- Sign off on the task to indicate that you have provided the assistance required. For faults, you also mark the fault as evaluated.

Find requests for engineering assistance

About this task

Follow this procedure to see a list of tasks and non-routine tasks (faults) for which technicians have requested assistance from engineering, and to display the task details.

Steps

1. On your to-do list, **Engineering Required Tasks** tab, click the name of the task or fault.
2. On the **Task Details** page, review the information on the **Task Information** tab and the **Task Execution** tab. For a fault, also review the **Fault Information** tab.
3. Identify the information you can add to the task to help the technician.

   Next Steps: Add the information to the task details.

Add information to tasks when engineering assistance requested

About this task

After reviewing tasks or non-routines for which technicians requested engineering assistance, you add information to the task that will help the technician to complete the work. For example, you might want to add labor and part requirements, instructions to perform the task, attach a document, and so on.

Steps

1. On the **Task Details** page, **Task Execution** tab, do one or more of the following:

To	Do this
Add a labor requirement	In the **Labor** area, click **Add Labor Requirement**. On the **Add Labor Requirement** page, provide the requested information and click **OK**.
Edit a labor requirement	In the **Labor** area, click **Edit Labor Requirements**. On the **Edit Labor Requirements** page, for each labor skill: • If certification or inspection are required, under the **Certification** or **Independent Inspection** column, select the **Required** check box, and enter a number of hours. • If certification or inspection are not required, under the **Certification** or **Independent Inspection** column, clear the **Required** check box.
Add a part requirement	In the **Part Requirements** area, click **Add Part Requirement**. On the **Add Part Requirement** page, enter your search criteria and click **Search**. From the search results, select a part, and edit the content of the available fields as required.

To	Do this
	Tip For repairable parts installed on the asset, and that will be removed, sent for repair, and either reinstalled after repair or replaced by another part, select both the RM and IN check boxes in the part requirement. CAMO will automatically create a repair order for the removed part as soon as the removal is complete.
	Click **Assign Selected Parts to Task**.
Add a tool requirement	In the **Tool Requirements** area, click **Add Tool Requirement** ⊞ . On the **Add Tool Requirement** page, enter your search criteria and click **Search**. From the search results, select one or more tools. In the **Sched. Hours** column, enter the number of hours the tool will be used. Click **Assign Selected Tools to Task**.
Add a measurement to record during execution	In the **Measurements** area, click **Add Measurement** ⊞. On the **Add Measurements** page, filter and select one or more measurements and click **Add Measurement**. Added measurements are displayed below measurements that are already listed.
Add or remove task card steps	In the **Steps** area, click **Add Step** ⊞ to add a step or ⊟ to remove a step. On the **Add Step** page, enter a description of the step the technician must take and click **OK**.

2. To add instructions to the task or fault, do the following:

a) On the **Task Details** page, **Task Information** tab, **Instructions** area, click **Edit Instructions** .

b) On the **Edit Instructions** page, enter instructions for technicians to follow to resolve the task or fault, and click **OK**.

3. To identify the aircraft zone(s), do the following:
   a) On the **Task Details** page, **Task Information** tab, **Zones** area, click **Add Zone** .
   b) On the **Add Zone** page, select one or more zones and click **OK**.
4. To identify the aircraft panel(s), do the following:
   a) On the **Task Details** page, click the **Task Information** tab.
   b) In the **Panels** area, click **Add Panel** .
   c) On the **Select Panel** page, search for the panel.
   d) Select one or more panels. Click **OK**.
5. To add a technical reference, do the following:
   a) On the **Task Details** page, **Task Information** tab, **Technical References** section, click Add Technical Reference .
   b) On the **Add Technical Reference** page, in the **Name** field, enter a name.
   c) In the **Link** field, enter a reference number or Web address for the document.
   d) Complete the remaining fields as required, and click **OK**.
6. To attach a file, do the following:
   a) On the **Task Details** page, **Task Information** tab, **Attachments** area, click **Add Attachment** .
   b) On the **Add Attachment** page, in the **Attachment** area, drag and drop the file or click to select the file on your computer.
   c) Enter the requested information and click **OK**, or to add another attachment, click **OK and Repeat**.

What's next

Sign off the task or non-routine to indicate you have finished providing information.

Sign off tasks after providing engineering assistance

After adding information to a task or non-routine to respond the request for assistance, you sign off on the labor row of the task that calls for the engineering skill. For non-routines (faults), you also mark the fault as evaluated.

Steps

1. On the **Task Details** page, click the **Task Execution** tab.
2. In the **Labor** area, on the labor row for the Engineering skill (ENG), click **Finish**.
3. On the **Work Capture** page, provide the information requested, and click **OK**.

4. On the **Task Details** page, click **Finish Evaluation**.
5. If prompted, enter your password and click **OK**.
6. On the **Confirm** page, click **Yes**.

Quick text

Whenever a technician is resolving a fault, they will list out the steps they need to perform. These steps are often common phrases such as "Take measurements of the dimension of the damage" or "Apply a chemical conversion coating to the repair parts and to the bare surface".

Whenever a technician resolves a fault or signs for the completion of a job card, they need to write a short phrase to describe what was done. For example: "Performed inspection as per AMM 24-11-00-700-804"

In both of these situations, there is a common list of phrases that a technician will use. The Quick Text feature allows engineers to define the list of common phrases that are available to the technicians. There are several benefits to using Quick Text:

- Selecting a Quick Text phrase is much easier and quicker for the technician. Instead of typing out a full sentence, they can quickly select the proper phrase from a Predefined Actions list.
- The engineers can ensure that technicians use the same phrase for all tasks, ensuring consistency and avoiding common spelling/grammar mistakes.

You can set up a Quick Text phrase to include the reference type and specific reference title that was selected for a fault. You do this by including the keyword {REFERENCE} in your Quick Text phrase. For example, for your quick text phrase, you might type:

```
Performed inspection as per {REFERENCE}.
```

Then, when technicians select from the Predefined Actions list to sign for a fault or task that has a reference selected for it, CAMO replaces the key with the actual reference type and title. Or if the technician manually types in the reference, the key is also replaced. For example:

Performed inspection as per AMM 24-11-00-700-804, where AMM is the reference type and 24-11-00-700-804 is the reference title of the reference that was selected for the fault.

Create quick text entries

You can create quick text entries to help others quickly record work capture or add job card steps to tasks and faults. After you create quick texts, they are available for technicians and inspectors to select from Predefined Actions lists.

About this task

For example, you can create quick text entries for common structural repair steps performed by technicians.

Steps

1. Click the down arrow next to the CAMO logo, then click [your role], and then click **Manage Quick Text**.
2. Select the type of quick text you want to add.
3. Enter the quick text.

> **Note** To create phrases that display specific reference types and titles when technicians view the Predefined Actions list for a fault or task that's associated with a reference, use the keyword {REFERENCE} in your phrase. For example, type: `Performed inspection as per {REFERENCE}.`

4. Click **OK**.

View quick text entries

You can view the list of quick text entries if you need to add or remove one.

Steps

1. Click the down arrow next to the CAMO logo, then click [your role], and then click **Manage Quick Text**.
2. From the **Type** list, select a type to see the quick text associated with that type.

Edit quick text entries

You can edit existing quick text entries to ensure technicians are using up-to-date information. For example, if the steps needed to perform a structural repair have changed, you can edit the associated quick text entry.

Steps

1. Go to the **Manage Quick Text** page.
2. In the **Type** list, select the type of quick text you want to edit, and edit the quick text as required.
3. Click the check mark ✓ to confirm your changes.

Delete quick text entries

You can delete quick text entries that are no longer appropriate for a repair or applicable to an approved maintenance procedure. Once deleted, technicians will not be able to see the quick text entries on the Add Job Card Step page or the Work Capture page.

Steps

1. Click the down arrow next to the CAMO logo, then click your [your role], and then click **Manage Quick Text**.
2. From the **Type** list, select the quick text type that you want to delete.
3. Click next to the quick text item you want to delete, and then click **Yes** to confirm.

4

Maintenance planning

Task deadlines and forecasting

A task deadline is the date when the task must be completed, also called the due date: it is a key criteria for maintenance planners to decide which tasks to group in a work package. The deadline of the next occurrence of a recurring task is calculated based on the last time the task was performed on the inventory item, and the scheduling interval of the task. Forecasting is the process CAMO uses to predict or estimate the calendar date that the task may come due. In CAMO, the next occurrence of a recurring task is the active task (it has the status value ACTV), and subsequent occurrences that CAMO creates are the forecasted tasks (they have the status of FORECAST).

For tasks whose deadlines are calculated simply in elapsed calendar time; that is, forecasting deadlines for each occurrence of a recurring task that is due every six months is a straightforward process. However, for tasks whose deadlines are based on the usage accrued by the asset, such as flying hours or cycles, CAMO includes and uses more elaborate forecasting capabilities that consider the flight plan, longer term forecasting models, and rounding and forecasting thresholds.

When information about an inventory item changes and is updated in CAMO, such as the usage accrued during the last flight, the task deadlines are recalculated automatically to take the updated information into consideration. Therefore, the most up to date information is available for planning the maintenance work. There is also a CAMO job that your administrator can configure to run at regular intervals to update task deadlines based on the latest information in the system. For more information about CAMO jobs, see the *CAMO Administration Guide*.

Task deadlines

CAMO calculates the deadline of planned routine work according to the scheduling information and rules included in the requirement definition, or in the block definition when a block is used.

Non-routine work consists of faults that were deferred, on-condition tasks that became necessary because a specific circumstances, for example an inspection task for electric systems is needed because the aircraft was hit by lightning, and ad hoc tasks. For non-routine work, the deadline is set manually in CAMO—on the Scheduling tab of the Fault or Task Details page—by the user who creates the task, the user who defers the fault, or it may be left up to the maintenance planner to set the deadline. However, on-condition tasks can include pre-defined scheduling information stating that, for example, the task should be completed five days after the prerequisite condition occurred.

The scheduling information in the requirement and block definitions associated with routine tasks includes the following:

- The scheduling start date or value.
- The interval to add to the start date or value to calculate the deadline. After the task has been completed once, the interval is added to when the task was performed to determine the due date of the next occurrence of the task.

The interval is specified using calendar parameters, usage parameters, or a combination of both.

You can see the due dates of tasks on many different pages in CAMO, for example the Inventory Details page, the Task Details page, and many pages that list tasks such as the Fleet Due List tab.

Some organizations allow maintenance planners to do the following:

- Change the interval related to the deadline of an ad hoc task or a fault, which affects the deadline.
- Extend the deadline of a task.
- Add or remove a deadline to an ad hoc task or a fault; in some organizations, the engineering department is responsible for setting the deadline of ad hoc tasks, while the maintenance controller does the same for ad hoc faults.
- Switch a soft deadline to a hard deadline to ensure the work is completed during a specific maintenance visit. This can only be done on ad hoc tasks and faults, not tasks that are based on a task definition.

Several CAMO pages also show the Schedule Priority tasks. CAMO changes the schedule priority from LOW to HIGH when the deadline is within the notification interval specified in the task definition. If the work is not completed by the deadline, the task is considered overdue, which can ground an aircraft. Tasks with soft deadlines are never considered overdue.

Estimated due dates for tasks with usage-based scheduling

When CAMO forecasts deadlines, the usage parameters considered are:

- Flight schedules (short term tasks),
- Forecast models, and blackout periods,
- Bypass thresholds,
- Rounding rules.

Except for forecast tasks due after today, the estimated due date is the latest time that the task can be done, or could have been done, before becoming overdue:

In flight plan?	Estimated due date based on	Scenario	Estimated due date
Yes*	CYCLES LANDINGS HOURS	Positive or 0 remaining usage Negative remaining usage	One minute before the departure date of the flight during which remaining usage will become negative.
No	Forecast model	Task due after today	23:59 the day before task becomes due**
No	Forecast model	Task due today	Today at 23:59

Note ***Organizations can set thresholds for bypassing the flight plan** which improves the forecasting accuracy of longer deadlines by using the faster and less volatile forecast model. The recommended threshold values should equate to 1 or 2 years of flying: 6000 hours/3000 cycles for a typical airline. Setting the threshold too low (example: 100 hours) will negatively affect the precision of shorter deadlines as flight plans offer more precision. See 9.4.7 in the administration guide for setting bypass thresholds. ****Organizations can set rounding rules for estimated due dates.** These reduce the volatility of longer-term deadlines which in turn reduces the effort to calculate and maintain deadlines. See 9.4.8 in the administration guide for setting rounding rules.

Due dates estimation for tasks with usage-based scheduling

By adding a threshold and rounding off dates, Maintenix forecast deadlines only when needed, thereby avoiding unnecessary calculations.

There are four rounding rules on how the due dates estimation model works:

UPPER_FORECAST_ROUNDING_LIMIT (Default of 50)
YEAR_FORECAST_ROUNDING_LIMIT (Default of 20)
MONTH_FORECAST_ROUNDING_LIMIT (Default of 5)

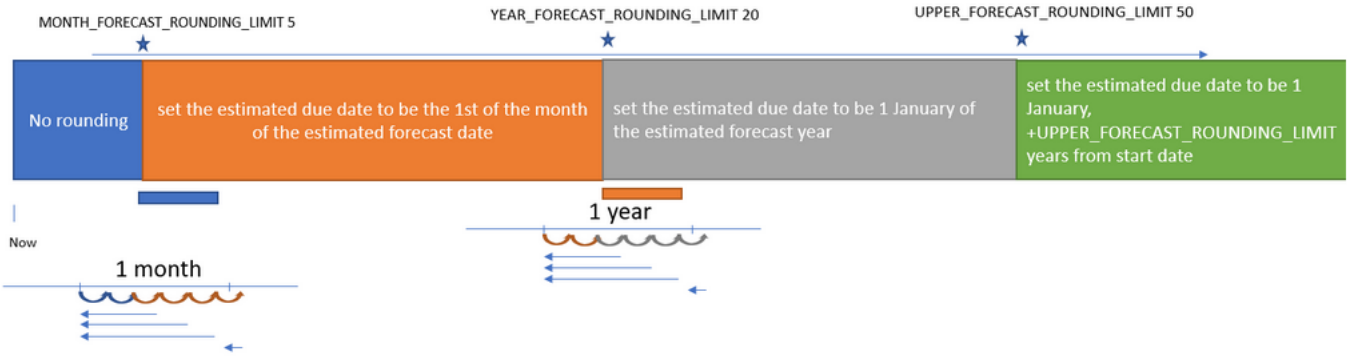

1. Deadline date < MONTH_FORECAST_ROUNDING_LIMIT, then do not do any rounding
2. MONTH_FORECAST_ROUNDING_LIMIT< forecasted date < YEAR_FORECAST_ROUNDING_LIMIT, set the estimated due date to be the 1st of the month of the estimated forecast date
3. YEAR_FORECAST_ROUNDING_LIMIT< forecasted date <UPPER_FORECAST_ROUNDING_LIMIT, set the estimated due date to be 1 January of the estimated forecast year
4. UPPER_FORECAST_ROUNDING_LIMIT <forecasted date, set the estimated due date to be 1 January, +UPPER_FORECAST_ROUNDING_LIMIT years from start date

As the diagram above shows, in the rounding rules when dates fall on the edge, the forecasting logic skips the first month, and first year when it comes to rule 2 and rule 3.

For example: Consider a situation where the date falls on the edge of a limit as the second rounding rule between the month and the year limit, the deadline is rounded to the 1st of the month in the setting range. If scheduling starts today June 15th,2023, and the YEAR_FORECAST_ROUNDING_LIMIT is 20 years, the setting range falls in the year 2043, i.e January 1st to December 31st, 2043. The deadline due for Task B is July 15th, 2043, the deadline forecasted is rounded to July 1st, 2043, If Task A has a deadline due on April 8th, 2043, this is rounded to April 1st, 2043.

The rounding off to January 1st begins from the second year of the setting range. According to this example, the year 2044. The same calculation applies to limits that fall in the edge when MONTH_FORECAST_ROUNDING_LIMIT is applied.

Note You can set the rounding threshold for your organization to accommodate your forecasted calendar deadline setting preferences. Read more about setting configuration parameters to round off long-term estimated deadlines in the Maintenix Administration Guide.

Driving tasks and driving deadlines

The due date of a work package or a block that is listed on the Open Tasks or Preview Release pages for an aircraft is determined by the driving task. CAMO uses the driving task as the due date on a work package or block to help ensure tasks don't become overdue during planning and execution of maintenance.

The driving task is the task in a work package or block that has the earliest deadline. When driving tasks in work packages or blocks are overdue, the work package and block due dates and the driving task are displayed in bold red font on the Open Tasks and Preview Release pages for an aircraft.

Before examining which task drives the due date for a block or work package, it is useful to understand the driving deadline for a task.

Driving deadline for a task

If a task has more than one scheduling rule based on different usage parameters such as hours and cycles, the driving deadline for a task is the deadline that is forecast to arrive earliest. If a task definition has one scheduling rule that requires the task to be done after 100 flying hours and another scheduling rule that requires the task to be done after 50 cycles, which rule drives the deadline for the task? For usage based scheduling CAMO uses the flight plan and the forecast model (the rate at which the aircraft accumulates usage) to estimate calendar dates when the aircraft will reach each of the scheduling deadlines. For example, if a task is due in 100 hours or 50 cycles and the plan is that the aircraft will operate 5 hours a day, and 2 cycles a day, then the aircraft will reach the hours deadline in 20 days and the cycles deadline in 25 days. If the task is scheduled to the earliest deadline, then the deadline based on hours is the driving deadline. If the task is scheduled to the latest deadline, then the deadline based on cycles is the driving deadline.

Using the earliest due date as the driving deadline for a task is the default behavior, but you can specify in a block or requirement definition that the task deadline should be scheduled to the latest of its deadlines. In this case, the latest deadline becomes the driving deadline. (You do this by selecting the Schedule to Latest Deadline option in the block or requirement definition.) The rest of this topic describes the default behavior that uses the earliest deadline.

Driving task for a work package

The driving task for the work package is the requirement or block included in the work package that has the earliest driving deadline – even if an assigned task is due before the start date of the work package.

Driving task for a block

When several requirements are grouped in a block, the driving task has the earliest driving deadline among the block itself and its assigned requirements - even if an assigned task is due earlier than the block. It is possible that a requirement can be assigned to a block where the scheduling interval of the requirement is less than the scheduling interval of the block and the task deadline is therefore earlier than the block deadline.

Note that the due date displayed for the block, depends what page you are looking at:

- On the Task Details for the block, the due date displayed is not the driving task, but the due date based on the scheduling defined in the block's task definition. This date can be different than the due date for the block that shows on other pages.
- When you look at the open task list for an aircraft - the Inventory Details page, Open Tasks tab or the Preview Release page, the due date for a block is the due date of the driving task. This alerts you to blocks that you might want to pull into a current work package.

If the usage deadlines for several tasks in a block are on the same date, CAMO determines the driving task and deadline for the block by sorting the usage deadlines in the following order:

1. Due date.
2. Deadline data type:
   a. usage in cycles
   b. usage in hours
   c. usage in days
   d. calendar days
3. Remaining usage quantity.

The block is displayed as a list sorted by deadline, so the first task in list is the deadline for the block. For example, a block and its five requirements are ordered as follows, with REQ 2 as the driving task for the block:

REQ2	Usage Remaining: 20 Cycles. Due: Sept 20, 2012
Block	Usage Remaining: 22 Cycles. Due: Sept 20, 2012
REQ4	Usage Remaining: 38 Hours. Due: Sept 20, 2012
REQ1	Usage Remaining: 40 Hours. Due: Sept 20, 2012

REQ5	7 Days Remaining. Due: Sept 20, 2012
REQ3	Due: Sept 22, 2012

Under the hood, CAMO sorted these tasks in three iterations to determine the driving deadline for the block:

1. By due date: Block, REQ1, REQ2, REQ4,REQ5, REQ3
2. By deadline date type: Block, REQ2, REQ1, REQ4,REQ5, REQ3
3. By quantity of remaining usage: REQ2, Block, REQ4, REQ1,REQ5, REQ3

Viewing due dates and recurrences of tasks

On CAMO pages that list tasks, the predicted due date for a task is shown, along with other information—such as the extended deadline when applicable and, for recurring tasks, the repeat interval. You can use this information to decide when to execute a particular task. This applies to tasks based on a task definition, and to ad hoc tasks.

For recurring tasks, you can see how much of the repeat interval has been used up already, and how much yield has been achieved since the last time the task was performed.

This information is shown in the Due column (see the figure) that appears on the following CAMO pages:

- Inventory Details page, Open tab, Open Tasks sub-tab.
- Work Package Details page, Assigned Tasks tab.
- Work Package Details page, Unassigned tab, Unassigned Tasks sub-tab.
- Fleet Due list.
- Task Search by Type page.
- Task Search page.

On the Inventory Details page (Open Tasks sub-tab), the Work Package Details page (Assigned Tasks tab), and the Task Search by Type page, **[UNZIPPED]** is appended to a requirement's name in the Name column when the requirement is excluded from the zip job. On the Task Details page, this status is shown as a banner rather than as a suffix.

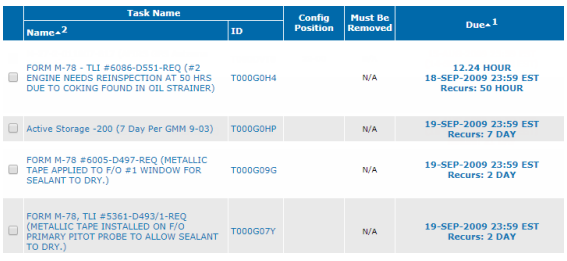

	Task Name		Config Position	Must Be Removed	Due
	Name	ID			
☐	FORM M-78 - TLI #6086-D551-REQ (#2 ENGINE NEEDS REINSPECTION AT 50 HRS DUE TO COKING FOUND IN OIL STRAINER)	T000G0H4		N/A	12.24 HOUR 18-SEP-2009 23:59 EST Recurs: 50 HOUR
☐	Active Storage -200 (7 Day Per GMM 9-03)	T000G0HP		N/A	19-SEP-2009 23:59 EST Recurs: 7 DAY
☐	FORM M-78 #6005-D497-REQ (METALLIC TAPE APPLIED TO F/O #1 WINDOW FOR SEALANT TO DRY.)	T000G09G		N/A	19-SEP-2009 23:59 EST Recurs: 2 DAY
☐	FORM M-78, TLI #5361-D493/1-REQ (METALLIC TAPE INSTALLED ON F/O PRIMARY PITOT PROBE TO ALLOW SEALANT TO DRY.)	T000G07Y		N/A	19-SEP-2009 23:59 EST Recurs: 2 DAY

Due column

The content of the Due column differs slightly depending on whether the task is recurring, and if the task deadlines are specified using a usage parameter or a calendar parameter.

For non-recurring tasks, only the next due date is shown. If the task deadline is based on usage parameters, the due date is the predicted due date, which is based on the usage forecast from the flight schedule and forecast model. If the deadline is based on calendar days, the date shown is the actual due date.

For deadlines based on usage parameters, you see the following information:

- The remaining usage before the task is due. If a deadline extension was added to the task, the sum of the remaining usage and the extension is shown in parenthesis.
- The predicted due date. This is not shown if the target inventory of the task is loose—not installed on an aircraft.
- The repeat interval, for recurring tasks only.

For deadlines based on calendar parameters, you see the following information:

- The due date.
- The extended due date, which is the date that corresponds to the due date plus the deadline extension that was added to the task.
- The repeat interval, for recurring tasks only.

Sorting rules for the Due column

The default sorting rules of the Due column of the Open Tasks list, on the Inventory Details page are as follows:

For aircraft, or assemblies and components that are installed on an aircraft:

- The list is sorted by the predicted due date in chronological order.
- Tasks that do not have a deadline are at the end of the list.

For loose sub-assemblies and components:

- The first sort is by the due date for calendar deadlines.
- The second sort is by the usage parameter code.
- The third sort is by the usage remaining.
- Tasks that do not have a deadline appear at the end of the list.

Note In all cases, the Due column displays the earliest of the following dates: the task due date, or the plan by date, if one was set by an authorized user to override the due date. See Extending, Overriding, and Changing Due Dates. If the task is overdue CAMO always displays the due date.

Deadline extensions

Maintenance Planners use deadline extensions in situations where the aircraft cannot be brought to the repair station in time to do the maintenance. They approach the appropriate regulatory authorities and ask for permission to get a small extension; enough time to make it to a maintenance airport. They do this to avoid grounding the aircraft, which is what would happen if the deadline goes overdue.

This procedure is also useful before activating new revisions of requirements or maintenance programs, to avoid having many tasks become overdue because of the revision.

You extend the deadline by adding to the deviation on its scheduling parameter(s). When you extend a deadline by a number with fractions, for example, 2.5, and the deadline uses calendar days, weeks, or months as the scheduling parameter, the extension can cause the new deadline to be at a specific time during a day. To avoid a task from becoming overdue, CAMO sets the deadline to 23:59 on the previous day. When you extend the deadline for a block, CAMO also extends the deadlines for all sub-tasks (requirements) with the current driving deadline on or before the extended deadline for the block.

When you are looking at the due date of tasks from the Inventory Details page > Open Tasks tab > Due column, you can tell if the deadline has been extended when another date is displayed in parentheses after the due date. For example, if the Due column displays something like 19-SEP-2017 23:59 EST (26-SEP-2017 23:59 EST), the original due date is 19-SEP and the extended due date is 26-SEP.

Plan By Date

Requirements have a due date based on their intervals. However, large or long-term requirements must be manually staggered so that they are not all executed at the same time to ensure that parts and tools are all available, and that optimal use is made of the labor resources that are available. Using the Set Plan By Date feature, you can set the date by which the requirement task should be completed to an earlier date than its due date. The plan by date does not replace the due date; it is an additional piece of information maintenance planners can use. You can set the plan by date for any active occurrence of the requirement. You can set the plan by date on individual active occurrences of the requirement, or for multiple occurrences of the requirement. When you access Set Plan By Dates from the Requirement Details page, CAMO lists all active tasks based on any revision of the requirement task definition, for all applicable inventory. Forecasted tasks are not shown. By default, the list is sorted by root inventory, then assembly, inventory, and lastly, by position.

Note CAMO clearly indicates when it is using the plan by date, for example: 01-MAR-2017 23:59 EST (PLAN BY) rather than the original due date. However, if there is an extended due date, the requirement will be due on the earliest date of the Extended or the Set Plan By Date.

Shifts and capacity patterns

A *shift* is the amount of time a maintenance staff member spends at work. Each shift has a start time, a total duration, and a number of hours of work produced by each person working that shift. Shifts are used when you create capacity patterns.

A *capacity pattern* is a pattern of time periods and labor skills. Capacity patterns are used to model the nominal capacity available at your maintenance location(s) well in advance of a project, when the real shift schedule that identifies the individuals who will be scheduled to work is not yet known. Therefore, a capacity pattern captures the types of work and amount of work that can be performed during a certain time period, without naming the actual people who will do the work.

A capacity pattern is either a one-day or a seven-day pattern of shifts. For each shift in a pattern, you record the types of work and the number of resources that are planned to be available. Capacity patterns are used by the Production Planning and Control (PP&C) application and the Long Range Planner (LRP) application.

Productivity factor

A location's productivity factor is an overall assessment of the capability of the location and its staff to complete maintenance tasks in the amount of time specified for the task duration.

A productivity factor of 100% means that tasks are usually completed in the specified task duration; less than 100% means it takes longer to complete the tasks, perhaps because the staff is less experienced; more than 100% means that tasks are completed more quickly than the specified duration. This value is for information purposes only, but it is helpful when adjusting production plans created for specific work packages.

Planning types

Planning types provide an approximation of the number of hours of non-routine work likely to be generated for every hour of work on a specific aircraft type, and the skills needed to complete this non-routine work. Planning types are used in the Production Planning and Control (PP&C) application and in the Long Range Planner (LRP) application.

The estimate of the amount of effort required to complete non-routine work that will be found during a planned, routine maintenance task—called the initiating task—is generated using the planning type that is assigned to the initiating task. Each planning type has a non-routine factor that specifies the number of hours of non-routine work for one hour of work performed on the initiating task. Ideally, the non-routine factor specified is based on historical maintenance data that was recorded over time for the task, as it was performed several times on a specific type of aircraft.

For example, a maintenance department has recorded the faults found, and the work performed on aircraft of type X during a routine inspection. The accumulated data shows that for every hour spent inspecting that type of aircraft, the faults raised required two hours of work. Therefore, for the routine inspection task on aircraft of type X, the non-routine factor is 2. If for every hour of inspection, 30 minutes of corrective work are required, the non-routine factor is .5.

The planning type also identifies the skills required to complete the non-routine work, which is helpful when comparing the work required with the nominal capacity that is available. Continuing with the earlier example, if historical data shows that the non-routine work resulting from the routine inspection is completed in part by a machinist, in part by an electrical technician, and in part by an avionics technician, you add each of these skills to the planning type, and set the percentage of the non-routine work duration that requires each skill. If the skills required for a planning type are unknown, you can specify a generic skill, for example that 100% of the non-routine work is done using the laborer skill.

Capacity summary

The Capacity Summary tab displays the summary of capacity for labor, parts, and tools for line locations assigned with an Overnight Capacity Shift for work packages scheduled during this shift.

You can filter the page to display results by a number of days, by station, or to show only stations where there is inadequate capacity for labor, parts, or tools.

The following capacity summary information is displayed in the table:

- Line Location: The stations for which the capacity is displayed.
- For each date, you can see the following information:
  - # of Work Packages: The number of work packages scheduled at the corresponding location.
  - Labor: The capacity status of labor resources.
  - Part: The capacity status of parts.
  - Tool: The capacity status of tools.

The capacity status of labor, parts and tools is summarized by an icon as follows:

- A green check mark indicates that the station has capacity for the particular resource. For example, a green check in the Part column means that there parts available for all work packages scheduled for that day.
- A yellow warning icon indicates that the station does not have the capacity for the particular resource available locally, but there are resources available remotely. For example, a yellow warning in the Part column means that there not enough parts available locally for all work packages, but there are parts available at the supplier location.
- A red circle indicates that the station does not have the capacity for the particular resource. For example, a red circle in the Labor column means that there is not enough labor resources to handle all work packages scheduled for that day.

View capacity summary for stations

You can view capacity summaries for stations and link to detailed views of station capacity for labor, parts, and tools.

Prerequisite

Line locations to be displayed must have an Overnight Capacity Shift assigned, and the work packages considered must be scheduled during this shift.

Steps

1. Go to the **Capacity Summary** tab.
2. Enter the number of days you want to show capacity for.
3. (Optional) From the **Station** list, select a station.
4. (Optional) To view stations with inadequate capacity, select the **Only show stations with warnings** check box.
5. Click **OK**.
6. (Optional) To see details by station, resource, and day, click an icon in the row and column you want.
   The **Station Capacity** page opens. You can switch tabs to see other details for the station.

Long range planning

Long Range Planner (LRP) is a planning tool that you can use to plan heavy maintenance activities for aircraft in your fleet. LRP enables multiple planners to view heavy maintenance activity plotted in a highly accessible Gantt chart. With LRP you can create, modify, and compare plans, and then publish your changes to CAMO.

LRP is not intended for use in planning engine maintenance, and it does not take into account labor skills.

LRP supports the following planning functions:

- Adding future aircraft to your fleet.
- Adding new maintenance locations, and modifying hangar capacities.
- Defining weekly and seasonal extraction rules for taking aircraft out of service.
- Modifying aircraft utilization.
- Including non-routine estimates, or buckets and buffers when calculating durations.
- Defining location capabilities, such as line, hangar, and paint.
- Allowing multiple planners to work on a single long range plan.
- Testing multiple what-if scenarios to see the impact of altered aircraft usage and work package start/end dates, without changing your original information.

Before you begin

LRP is dependent on data that is created in CAMO. Before you begin creating long range plans, the following must exist in CAMO:

- Aircraft needed for your plan.
- Forecast models for each aircraft that you add to the fleet list.
- Work locations needed for your plan.
- Blocks and requirements that are initialized against the aircraft in the fleet list.

Launch Long Range Planner

Prerequisite

- LRP permissions settings are configured for your user role.
- The Launch Long Range Planner button is on your to-do list.
- You know your server name and port number.

Contact your CAMO Administrator for assistance with these prerequisites if they have not already been configured for you.

About this task

Long Range Planner (LRP) is an optional component that you launch from within CAMO.

Steps

1. On your to-do list, click **Launch Long Range Planner**. If you are using Chrome or Firefox, and a download notification appears in your browser, click **Keep**.
2. If you see a dialog box asking you whether you want to run the application, click **Run**. This dialog box lists IFS as the publisher of the application.
3. In the **Login** dialog box, provide the following information:
   - The name of the server hosting CAMO and the port number.
   - Your user name and password.

4. Click **Login**. The Long Range Planner application opens.

   LRP has default settings for its Gantt charts to help you identify an ad hoc work package, an overrun bucket, or an extended deadline, among other events. You can tailor how work package-based and requirement-based events are displayed in the Gantt by adjusting these settings.
5. In LRP, click **Setup** > **Gantt Configuration**.
6. In the **Gantt Configuration** dialog box, select a color to represent each condition listed when viewing the work package.
7. Click **OK**.

Create long range plans

About this task

Long Range Planner allows you to create multiple long range plans, and for each plan you create, you can test different what-if scenarios. Each time you open a long range plan, the most recent information is loaded from CAMO automatically. You can also load the information manually.

A long range plan is created in the following order:

1. Select aircraft and modify the details of the aircraft in your fleet.
2. Add future aircraft if they are required.
3. Select and modify the details of your locations, and set up location capabilities.
4. Add blocks and requirements.
5. Save the plan.

To create a long range plan and assigning it an aircraft, complete the following steps:

Steps

1. In LRP, click **File** > **New**.

   > **Tip** You can also click on the LRP toolbar.

   In LRP, the **Fleet List** contains all aircraft that are available for planning purposes. By default, when you add an aircraft to your plan, read-only status is disabled, and ad hoc event control is enabled.
2. In LRP, click **Setup** > **Fleet List**.
3. On the **Fleet List** page, click **Add Aircraft** .
4. In the **Aircraft Search** dialog box, enter the registration or select an assembly.
5. Click **Search**.
6. Select one or more aircraft from the search results, and click **OK**.

Note If the received date is missing, a message appears telling you that one is required. Click **OK**, and then click the corresponding cell in the Received Date column to select the date from a calendar.

What's next

The next step in this process is to add a work location to your location list.

Add a work location

About this task

In LRP, the Location List contains all locations that are available for planning purposes. Examples of locations include a small hangar, or a section of a larger hangar that can handle multiple aircraft. Location types are restricted to Line, Track, Vendor Line, and Vendor Track locations. By default, ad hoc event control is enabled for locations.

Steps

1. In LRP, click **Setup** > **Locations**.
2. On the **Locations** page, click **Add Work Locations** .
3. In the **Search Locations** dialog box, set your search criteria.
4. Click **Search**.
5. Select one or more locations from the search results, and click **OK**.

What's next

The next step in this process is to add capabilities to the location.

Add capabilities to a location

Steps

1. In LRP, click **Setup** > **Locations**.
2. On the **Location List** page, double-click a location row.
3. On the **Location Details** page > Details tab > **Location Capabilities** area, click **Add Capability** .
4. On the **Add Capability** page, select work types (or capabilities), and click **OK**.
5. In the **Location Capabilities** table, select a priority value for each location capability.
6. Click **Apply** to save the capabilities to the location.

The next step in this process is adding blocks and requirements to your long range plan.

Add blocks and requirements to long range plans

About this task

Blocks and requirements must be activated in CAMO for them to appear in Long Range Planner. Blocks and requirements are only visible for aircraft for which they are initialized.

Steps

1. In LRP, click **Setup** > **Block/Requirement**.
2. On the **Block/Requirement List** page, click **Add Block/Requirement**  .
3. In the **Block/Requirement Search** dialog box, select the assembly name and any other search criteria.
4. Click **Search**.
5. Select one or more blocks/requirements from the search results, and click **OK**.

The next step in this process is to set yields and durations for the blocks and requirements.

Set yields and durations for blocks and requirements in long range plans

Steps

1. In LRP, click **Setup** > **Block/Requirement**.
2. On the **Block/Requirement List** page, double-click a block/requirement row.
3. On the **Block/Requirement Details** page, in the **Scheduling Information** area, provide the required information. Note the following:
   - **Minimum Yield**: Enter the minimum planning yield as a percentage.
   - **Maximum Yield**: Enter the maximum planning yield as a percentage.
   - **Default Duration**: Enter the number of days and hours required to complete the block/requirement.
4. Click **OK**.
5. With the long range plan open in LRP, click **File** > **Save**. If this is the first time saving the plan, you will be prompted to name it.
6. Click **OK**.

Run automation in the long range plan

About this task

In LRP, running automation enables you to schedule work packages based on the data in the open long range plan. When running automation, LRP orders items as follows:

1. Aircraft with higher priorities (specified on the Fleet List) have their work packages scheduled first.
2. When searching for maintenance locations that have the resources required for the type of work to be performed, the priorities specified in the Capabilities area of the Location Details page are used.
3. When two work packages have the same priority, the larger work package is scheduled before the smaller one.

> **Note**
>
> Read-only, locked, and ad hoc work packages are not scheduled by the run automation function.

Any work packages that could not be scheduled to a location are placed in overflow. These work packages must be manually scheduled to a location in the long range plan.

You can move scheduled work packages to another start or end date manually on the Gantt chart. You can also merge work packages within a plan.

Steps

1. In LRP, click **Actions** > **Run Automation**.

   > **Tip** You can also run automation by clicking **Run Automation** on the **LRP** toolbar.

2. In the **Run Automation** dialog box, review the list of aircraft included in the automation.
   - From the **Included Aircraft** list, click the right arrow next to the aircraft you want to exclude from automation.
   - From the **Excluded Aircraft** list, click the left arrow next the aircraft you want to include in automation.
3. Review the list of locations included in the automation.
   - From the **Included Locations** list, click the right arrow next to the location you want to exclude from automation.
   - From the **Excluded Locations** list, click the left arrow next to the location you want to include in automation.

4. Select the start date for automation. LRP only schedules work packages that are within this date range.
5. Turn Snap on or off. If Snap is turned on, you can select a **Close Gap** value. The **Close Gap** functionality is always enabled, but is only used when the Snap setting is turned on. When LRP is scheduling work packages, if a work package is close to another work package (within the gap), the work package is scheduled in a nose-to-tail fashion.
6. Click **OK**.

Lock work packages

About this task

Locking work packages prevents them from being rescheduled during automation.

Steps

1. In LRP, do one of the following:
   - To lock a single work package, select it on the Gantt chart.
   - To lock all work packages scheduled to a location, in the **Maintenance Line** view tab, select the location.
   - To lock all work packages scheduled against an aircraft, in the **Aircraft** view tab, select the aircraft.
   - To lock all work packages scheduled within the current date range, on the Gantt chart, click, drag, and release to create a selection box around the work packages.
2. On the toolbar, click **Lock Work Package** .
3. In the **Lock Work Package** dialog box, enter a reason.
4. Click **OK**.

> **Tip** To unlock a work package, select it on the Gantt chart, and click **Unlock Work Package** .

Move a work package from overflow

About this task

A work package is placed in the overflow section of the Gantt chart when automation could not schedule it to a location. Ad hoc work packages are automatically placed in overflow. Overflow is organized by aircraft type. You can move a work package from overflow to a specific location manually, but you cannot click a drag a work package from overflow to a location on the Gantt chart.

Steps

1. On the Gantt chart, double-click a work package.
2. Select the **Workscope** tab.
3. In the **Scheduling Information** area, **Location** list, select a location.

> **Note** To move a scheduled work package to overflow, leave the **Location** list empty.

4. Click **OK**.

Modify the scheduled dates and location of a work package

About this task

You can change the scheduled location for a work package on the Gantt chart. You cannot drag a work package from **Overflow** to a maintenance location.

Steps

1. To modify the scheduled start and end dates of a work package, in LRP, on the Gantt chart, click and drag the work package to the left or right.
2. To modify the location of a work package, in LRP, on the **Maintenance Line View**, click and drag your work package up or down to another location. The duration of the work package is updated based on the capacity of the new location.

Merging work packages (workflow)

When two planners manage the same fleet, but each planner manages a different block chain, at some point they need to merge their work packages. For example, Planner 1 manages A-checks, and Planner 2 manages C-checks. Planner 1 included C-checks in his plan as Read-Only. Planner 2 included A-checks in her plan as Read-Only. Planner 1 wants to merge an A-check with a planned C-check, as the forecasted due dates overlap.

You must have control of both block types to merge or add a task to another planner's work package. You must have control of all assigned tasks and blocks to publish or reschedule work packages.

1. Planner 2 publishes a plan.
2. In the Block Details of the A-check, Planner 2 clears the Read Only check box.
3. In the Gantt, Planner 2 double-clicks the work package to be modified.
4. On the Work Package Details page, Workscope tab, Planner 2 adds the A-check to the scope of the work package.
5. Planner 2 updates the scheduled location of the work package, and clicks OK.

6. Planner 2 publishes the plan.
7. In the Block Details of the A-check, Planner 2 clears the Read Only check box.
8. Planner 1 updates to actuals. Result: The merged work package is loaded into the plan.

Update and synchronize data

About this task

Several events that happen every day may affect the long range plan: flights are completed, maintenance is completed, maintenance programs are changed, etc. An effective long range plan needs to take into account all of the latest information, so that it can generate the most accurate forecast possible. In order to do this, LRP has a concept called Load Actuals.

When you use the Load Actuals function, LRP will retrieve the latest information from core CAMO. This includes: flight completion, maintenance completion, maintenance program changes, forecast model changes, etc. LRP will retrieve all of this information and then re-forecast the due date for every requirement in the plan. Using this updated forecast, a long range planner can see if there are any new problems or bottlenecks. They can then choose to re-run the Scheduling Automation or manually adjust and refine the plan so that it is an achievable plan once again.

> **Important**
>
> Depending on how your organization uses LRP, you might need to update maintenance completion and usage information in CAMO before you load up-to-date data to the plan.

You should load actuals manually when you first open a plan, before publishing changes to a long range plan, and when you want to see changes that have happened while you had a plan open. If you attempt to publish a long range plan when another user has made changes to it since you last loaded actuals, CAMO displays a warning dialog box, indicating how to continue.

Steps

1. In LRP, click **Actions** > **Load Actuals**.

> **Tip** You can also load data by clicking **Load Actuals**  on the LRP toolbar.

2. On the **Load Actuals Summary** page, review the list of issues that were found.
3. Click individual issues in the **Found Issues** table to display more detail.
4. Click **OK**.

Note Loading actuals can take a few minutes to complete.

Coordinating work packages between LRP and Production

Long range planners are responsible for the scheduling of a work package until maintenance begins. Once the work package enters the Commit or In Work status, maintenance production (who interact with core CAMO) will take control of the visit and will manage all dates and locations.

Even if LRP is no longer in control of the work package, LRP must stay informed of any scheduling changes being done by production, since those changes may affect other upcoming work. To reflect this, whenever you run the Load Actuals feature in LRP and the work package is in Commit or In Work status, the scheduling information (start date, end date, and location) will be updated to reflect the values in core CAMO. In addition, the work package will be locked so that LRP cannot modify it (you cannot change the dates or location).

When you publish a long range plan, if the work package is in Commit or In Work status, LRP will not make any updates whatsoever to the work package.

Note

Work packages that are created by the Long Range Planner (LRP) and published to CAMO remain under the control of LRP until they are committed. This means that while the work package is active, you cannot remove any of the tasks within CAMO that are in the workscope that was published from LRP.

Generate long range planning content

Prerequisite

- To run LRP reports, JasperReports server must be installed and configured in your CAMO environment.

About this task

You can generate and extract long range planning content from LRP in the following ways:

- Run one of the following reports:
  - Parts Forecast Report: A list of parts and part numbers and when they will be needed.
  - Schedule Report: A list of workscope items along with scheduled start and end dates, and locations where they will be completed.
  - Silt Report: The fleet availability based on the workscope of the long range plan.
- Export a long range plan in XML format for use in other applications.
- Print various views of the Gantt chart, for offline reference and viewing.

Steps

1. In LRP, click **Reports**, and select the report you want to run. CAMO opens in a browser window. If prompted, enter your CAMO user name and password, and click **Sign In**.
2. On the **Input Controls** window, provide the requested information, and click **OK**.

   You can export your plan in XML format, which you can then open, review, and modify in other applications, such as Microsoft Excel.
3. In LRP, click **File** > **Export**.
4. In the **Export Long Range Plan** dialog box, review the list of aircraft included in the export.
   - From the **Included Aircraft** list, click the right arrow next to the aircraft you want excluded from the export.
   - From the **Excluded Aircraft** list, click the left arrow next to the aircraft you want included in the export.
5. Review the list of locations included in the export.
   - From the **Included Locations** list, click the right arrow next to the location you want excluded from the export.
   - From the **Excluded Locations** list, click the left arrow next to the location you want included in the export.
6. Select the **Start Date** for the export. Work packages starting before this date are excluded from the export.
7. Select the **End Date** for the export. Work packages starting after this date are excluded from the export.
8. Enter the file name, or browse to select a folder on your computer.
9. Click **OK**.
10. In the **Export Long Range Plan** confirmation dialog box, click **OK**.

    You can print the Gantt chart view of your long range plan. Only the viewable area of the chart is printed. For large plans, to include all of the plan details, it might be necessary to print several versions of the plan.
11. In LRP, click the **Maintenance Line View** or **Aircraft View** tab.

12. Set the viewable date range to print by doing one of the following:
    - Select dates for the **From**: and **To**: date fields, and click **Show**.
    - Use the zoom functionality to display a specific date range.
13. On the LRP tool bar, click **Print**, select the printer to use, and click **OK**.

> **Note** You can change the page layout options and preview how the chart will look in print by clicking the **Page Setup** and **Print Preview** icons.

Publish long range plans

About this task

Publishing in LRP takes a long range plan and creates work packages and tasks in CAMO based on that plan, making it available to the rest of your organization.

Work packages in LRP correspond directly to work packages in CAMO. When you publish your long range plan, the work packages in LRP are turned into work packages in CAMO.

LRP can display several years of work packages for each aircraft, but only selected types of work packages are published to CAMO. LRP creates work packages against aircraft when at least one of the blocks or requirements is already initialized (in Active or Forecasted status).

If a work package does not already exist in CAMO, a new work package is created. If a work package already exists in CAMO, the work package is updated.

Work packages in overflow are published, however they are scheduled to the specific date and not to a location.

Steps

1. In LRP, click **Actions** > **Publish**.

> **Tip** You can also publish you plan by clicking **Publish** on the **LRP** toolbar.

2. In the **Publish Plan - Confirmation** dialog box, click **Continue**.
3. In the **Publishing Summary** dialog box, review the list of issues that were encountered during publishing. Clicking an issue in the **Found Issues** list displays further details in the **Issue Details** area.
4. Click **OK**. If during publishing, LRP discovers that some work packages have been started or completed, the changes are reflected in LRP post-publishing.

Create what-if scenarios

About this task

In LRP you can create what-if scenarios to see the impact of planning for events such as hangar track renovations, the introduction of a night shift, adding future aircraft to the fleet, or fleet retirement. You can then compare what-if scenarios to determine the best time to accommodate these changes.

The recommended work flow for creating what-if scenarios is as follows:

1. Duplicate an existing long range plan.
2. Do any of the following to best represent your ideal scenario:
   - Add future aircraft to your fleet.
   - Remove aircraft from the fleet.
   - Adjust the forecast model for your fleet
   - Set up ad hoc location and aircraft work packages.
   - Modify location capacity. See *Applying capacity patterns for a location*.
3. Run automation to schedule the changes to the plan. This may require some manual rescheduling of work packages. See *Scheduling work packages in the long range plan*.
4. Save the what-if scenario.
5. Compare your what-if scenario against your original plan.

To create a what-if scenario, you save a copy of an existing long range plan, and modify the copy as desired. Creating a copy of the original plan keeps you from writing over and losing information in the original.

Steps

1. With a plane open in LRP, click **File** > **Save As**.
2. Give your plan a name, and click **OK**.
3. Modify the plan to evaluate the impacts of your what-if scenario.

Add future aircraft to your fleet list

Prerequisite

The aircraft assembly and required maintenance items for the future aircraft must exist in the CAMO baseline.

About this task

Future aircraft are aircraft that are budgeted for and have not been received into CAMO.

Steps

1. On the **Fleet List** page, click **Add Future Aircraft** .

2. In the **Add Aircraft** dialog box, provide the required information.
3. Click **OK**.
4. On the Fleet List page, click **OK**.

Remove aircraft from your fleet list

Steps

1. In LRP, click **Setup** > **Fleet List**.
2. On the **Fleet List** page, select one or more aircraft in the fleet list, and click **Remove Aircraft**  .
3. In the **Remove Aircraft - Confirmation** dialog box, click **Yes**.
4. Click **OK**.

Change the forecast model of an aircraft in your fleet list

About this task

A forecast model estimates the usage accrued by the aircraft and the installed components. LRP uses forecast models to predict when maintenance tasks with usage-based deadlines will be due in the future.

Steps

1. In LRP, click **Setup** > **Fleet List**.
2. On the **Fleet List** page, double-click an aircraft row.
3. On the **Aircraft Details** page > **Details** tab > **Aircraft Information** area, select a **Forecast Model**.
4. Click **OK**.

Add an ad hoc aircraft work package to your plan

About this task

An aircraft ad hoc work package is used to indicate that maintenance for an aircraft should not be scheduled for a certain period of time. You create ad hoc aircraft work packages manually, and then you schedule them to your plan.

Steps

1. In LRP, click **Create New Ad Hoc Work Package**  .

2. In the **Create New Ad Hoc Work Package** dialog box, provide the required information. Note the following:
   - The duration is automatically adjusted to the delta between the start date and end date. If you change the duration of the work package, the end date updates accordingly.
   - Selecting a location for the work package is optional; however, if you do not select a location, the work package is placed in **Overflow**.
3. Click **OK**.

Add an ad hoc location work package to your plan

About this task

Ad hoc location work packages are not associated with an aircraft and do not have workscope. They are used to represent activities such as hangar blackouts. Repeat this procedure for each location affected by the activity.

Steps

1. In LRP, click **Create New Ad Hoc Location Work Package** .
2. In the **Create New Ad Hoc Location Work Package** dialog box, provide the required information. Note the following:
   - The duration is automatically adjusted to the delta between the start date and end date. If you change the duration of the work package, the end date updates accordingly.
   - Selecting a location for the work package is optional; however, if you do not select a location, the work package is placed in **Overflow**.
3. Click **OK**.

Compare two long range plans

About this task

Running the Long Range Planner Comparison report allows you to compare two of your plans. This report is launched from CAMO, and is generated in Microsoft Excel format.

Steps

1. In CAMO, click **Long Range Planner** > **Plan Comparison Report**.
2. In the **Report Parameters** dialog box, provide the following:
   - **Plan 1**: Select the first plan.
   - **Plan 2**: Select the second plan.
   - **Select a Start Date**: Work packages starting before this date are excluded from the report.
   - **Select an End Date**: Work packages starting after this date are excluded from the report.

3. Click **Generate**.

Set up capacity patterns for a location

About this task

Capacity patterns are used to determine the maintenance capacity of a location. Over time, a location's capacity may increase if a hangar expansion is planned, or decrease in the case of hangar repairs or statutory holidays.

A location's capacity is determined by recording the amount of work that can be performed during a set period of time, measured in manhours.

Daily capacity patterns specify one day's worth of available manpower. You can assign a pattern to a specific calendar day in LRP, to define a location's capacity for that day.

Weekly capacity patterns specify the available manpower for each day of one week (Monday to Sunday). Weekly capacity patterns are not specific to any calendar dates, but you can assign them to a range of dates to plan manpower needs for that period.

In LRP, work package duration is calculated using the default duration set on a block or requirement. Alternately, you can use location capacity to calculate work package duration. If location capacity is selected, you must provide additional capacity information for the location on the Capacity tab.

Steps

1. In LRP, click **Setup** > **Locations**.
2. On the **Location List** page, double-click a location row.
3. On the **Location Details** page > **Details** tab > **Duration / Capacity Configuration** area, select one of the following:
   - **Use Default Task Durations**: This option uses the default durations set on the block or requirement to determine the work package duration for the location.
   - **Use Location Capacity**: This option enables the Capacity tab and uses the provided capacity information to calculate the work package duration for the location.
4. Click **Apply**.
5. On the **Location Details** page, **Capacity** tab, do the following:
   - Enter the default capacity for the location.
   - In the **Not in Use** column, select the capacity patterns you want to include for your location.
   - Click the left arrow to move the capacity patterns into the **In Use** column.
   - In the **In Use** column, select the capacity patterns you want to exclude from your location.
   - Click the right arrow to move the capacity patterns into the **Not In Use** column.
6. In the **Standard Patterns** area, click the plus sign ⊞ to add a pattern row, and do the following:
   - Select a pattern from the **Name** drop-down list.

- Set the applicability range by providing dates in the **Effective From** and **Effective To** fields. The default effective to date is indefinite.
- Remove any standard patterns you do not want for your location by clicking the standard pattern row and then the minus sign ⊟ .

7. In the **Pattern Exceptions** area, click the plus sign ⊞ to add a pattern exception row, and do the following:
   - Select a pattern from the **Name** drop-down list.
   - Set the applicability range by providing dates in the **Effective From** and **Effective To** fields. The default effective to date is indefinite.
   - Select the **Recurring** check box to indicate that the exception repeats.
   - Remove any pattern exception you do not want for your location by clicking the row and then the minus sign ⊟ .

   Note You can assign daily capacity patterns to exception patterns, but they cannot overlap. If you attempt to add an overlapping pattern, you are given a warning and cannot proceed. The only time LRP allows two overlapping exception patterns is if one exception pattern is recurring, and the other is not. In this situation, LRP ignores the recurring pattern, and applies the non-recurring pattern to the specified date and year.

8. Click **OK**.

Create extraction rules for long range plans

About this task

LRP enables you to select weekly and season extraction rules, which specify the maximum number of aircraft that can be taken out of service at a given time. Extraction rules are created in CAMO, on the Extraction Rules to-do list. These rules are operator and assembly specific. You can also use assembly subtypes to apply a rule to a particular subset of aircraft.

Extraction rules can overlap. For example, a seasonal extraction rule can apply to the summer months, while a weekly extraction rule applies to each week in the summer.

Because you can assign several work types to a task, the work type order is used to set the hierarchy among them. The highest work type order (of all of the work types assigned to tasks within a work package) is the driving work type, which is used by the extraction rule logic. If more than one work type has the highest order, then both work types are treated as the driving work type.

For each extraction rule you can specify the work types. The extraction rule is applicable only to work packages with a driving work type that matches one of the work types specified for the extraction rule. When a rule is defined, and when a work package is scheduled, CAMO validates these work types against the work types for the blocks and the requirements. If there are no work types specified in the extraction rule, the rule applies to all work packages. Each work type has a priority order in the Maintenix database. The highest work type priority order of all the work types assigned to tasks within a work package is the driving work type for the work package.

Steps

1. In LRP, click **Setup** > **Extraction Rules**.
2. In the **Extraction Rules** window > **Not In Use** column, select the extraction rules to include in your plan.
3. Click the left arrow to move the extraction rule into the **In Use** column, and click **OK**.
4. In LRP, click **Setup** > **Extraction Rules**.
5. In the **Extraction Rules** window > **In Use** column, select the extraction rules to remove from your plan.
6. Click the right arrow to move the extraction rule into the **Not In Use** column, and click **OK**.

Create a seasonal extraction rule

About this task

Seasonal Extraction Rules specify the number of aircraft that can be out of service in a specific date range. By default, seasonal extraction rules have monthly date ranges.

Steps

1. On your to-do list, **Extraction Rules** tab, click **Create Seasonal Extraction Rule**.

2. On the **Create Seasonal Extraction Rule** page, provide the information requested.
3. In the **Date Ranges** area, click **Add Date Range** ⊞.
4. On the **Add Date Range** page, **Max in Maintenance** field, enter the maximum number of aircraft that can be repaired simultaneously during this date range. Leaving this field blank indicates that there is no restriction on the number of aircraft that are allowed out for maintenance during this time period.
5. Click **OK**.

Create a weekly extraction schedule

About this task

Weekly Extraction Rules specify the number of aircraft that can be out of service on a given day of the week. These rules can also be associated with a location. By default, weekly extraction rules have monthly date ranges.

Steps

1. On your to-do list, **Extraction Rules** tab, click **Create Weekly Extraction Rule**.
2. On the **Create Weekly Extraction Rule** page, provide the required information. Note the following:
   - **Effective To**: Enter the date that the extraction rule expires. If you leave this field blank, the extraction rule extends for the duration of the long range plan.
3. In the **Day/Time Range**, click **Add Date Range** ⊞ .
4. On the **Add Date Range** page, **Max in Maintenance** field, enter the maximum number of aircraft that can be repaired simultaneously during this date range. Leaving this field blank indicates that there is no restriction on the number of aircraft that are allowed out for maintenance during this time period.
5. Click **OK**.

Modify a weekly or seasonal extraction rule

Steps

1. On your to-do list, **Extraction Rules** tab, select the check box beside the extraction rule.
2. Click **Edit Extraction Rule**.
3. On the **Edit Weekly Extraction Rule** or **Edit Seasonal Extraction Rule** page, adjust the extraction rule details and ranges as required.
4. Click **OK**.

Duplicate a weekly or seasonal extraction rule

Steps

1. On your to-do list, **Extraction Rules** tab, select the check box beside an extraction rule and click **Duplicate Extraction Rule**.
2. On the **Duplicate Extraction Rule** page, adjust the details and date ranges as required, and click **OK**.

Add and remove an extraction rule

About this task

You can add or remove extraction rules in your long range plans.

Steps

1. In LRP, click **Setup** > **Extraction Rules**.
2. In the **Extraction Rules** window > **Not In Use** column, select the extraction rules to include in your plan.
3. Click the left arrow to move the extraction rule into the In Use column, and click **OK**.

Predicting maintenance deadlines with forecast models

A forecast model consists of a set of consecutive date ranges that span a year, the daily usage accrued by an aircraft, and the components installed on the aircraft, for each of the date ranges. Usage is tracked with usage parameters, for example, cycles, flying hours, and engine operating time.

A forecast model estimates the usage accrued by the aircraft and the installed components. CAMO uses forecast models to predict the due date of tasks that have usage-based scheduling intervals and deadlines. Every aircraft must have a forecast model assigned to it.

You can change the forecast model that is assigned to an aircraft. Also, you can modify a forecast model at any time. If a forecast model that is currently assigned to an aircraft is modified, CAMO recalculates all task deadlines for each affected aircraft.

Prerequisites:

- To create, edit, or assign a forecast model, you must have the Forecast Models tab assigned to your to-do list in CAMO.
- To view, edit, or assign a forecast model that has an authority assigned to it, you must also be assigned to that same authority. Your CAMO administrator is responsible for creating and assigning authorities.

Create a forecast model

Steps

1. On your to-do list, Forecast Models tab, click Create.
2. On the Create Forecast Model page, type a unique Name for the forecast model.
3. Adjust date ranges as follows:
   - To remove date ranges, select the associated check boxes, and then click Remove Date Range ⊟ .
   - To add a date range, specify the New Date Range Start Date by using the drop-down lists for month and day, and click Add Date Range ⊞ .
4. Modify the Usage by Day values as required.
5. Click OK.

Set a default forecast model

Steps

1. On your to-do list, **Forecast Models** tab, select a forecast model.
2. Click **Mark as Default**.

Assign a forecast model to an aircraft

Steps

1. On your to-do List, **Forecast Models** tab, select a forecast model.
2. Click **Assign Inventory**.
3. On the **Assign Forecast Model** page, use the **Assembly** drop-down list to limit the aircraft list to a specific aircraft type.
4. Select the aircraft to which you want to assign the forecast model, and then click **Save**.

View all aircraft assigned to a forecast model

Steps

1. On your to-do list, **Forecast Models** tab, click the forecast model name.
2. On the **Forecast Model Details** page, click the **Assigned Aircraft** tab.

> **Note** If you do not have the authority to view an aircraft that is assigned to the forecast model, that aircraft is not listed.

Fleet List tab

The Fleet List tab displays the list of aircraft for which the user has authority. You can filter the list to show the assemblies you're interested in and to hide columns you don't want to see.

On the Fleet List tab, select one aircraft at a time to create a flight record, raise a fault, create a task, create a work package (including the quick creation of work packages for turn and service checks), create a usage record, and access the 5-Day Planner for that aircraft.

The fleet list table contains the following columns:

- Operating Condition Icon: Icon that identifies the operating status of the aircraft.
- Aircraft: The assembly name and registration code of the aircraft.
- Serial No: the inventory number of the aircraft.
- Aircraft Registration (number)
- Fin No (number)
- Current HOURS: the current flying hours for the aircraft. Value is displayed according the setting for the USAGE_HOURS_AS_DECIMAL configuration parameter - either as a number or in time format.
- Operating Status: The aircraft's current status, which indicates whether the aircraft can be scheduled for flights, is undergoing maintenance, is awaiting release from maintenance, is under MEL, has an open fault, or is grounded because it has an overdue or an AOG fault. When an aircraft's operating status changes, you can click the status icon to view details and link to the Inventory Details page where you can make any necessary changes.
- Capability: The aircraft capability, for example, whether the aircraft is ETOPS-compliant.
- Location: Current location of the aircraft.
- Next Work Package: This area of the table shows information about the work package that is currently in work for the aircraft; when there is no work package in work for an aircraft, the information shown pertains to the upcoming work package that has the earliest scheduled start date. For each work package, the following information is provided:
  - Name: The name of the work package.
  - Start Date: For work packages that have not been started yet, this column shows the scheduled start date. For work packages that are in work, IN PROGRESS is shown.
  - End Date: The estimated end date of the work package.
  - Work Location: The maintenance location where the work package is scheduled.
  - Work Type: The work type(s) associated with the work package.
  - Class - Subclass: The class and subclass (or subtype) assigned to the work package. Aircraft work packages have the CHECK class, and the subclass, when one is assigned, is a value set up by your organizations, for example C-CHECK.

Related concepts

Aircraft capabilities

Monitoring aircraft operating status

You can view the operating status of aircraft on the Fleet List page. In addition to information on the page, if you click the status icon, a pop-up window displays more about the aircraft status and links to relevant pages such as open faults, overdue tasks, work packages.

Sometimes you might not see an expected update on the Fleet List. Here is how Fleet List is refreshed:

- Key events such as the creation of a new fault, or the release of an aircraft from maintenance trigger the aircraft operating status recalculation work item.
- This work item has the highest priority of all work items, but processing cannot always begin immediately.
- After the work item has processed the new status, the page refresh waits until the MX_CORE_MVIEW_FLEET_LIST job runs. Administrators can check the Jobs page to see the refresh interval.

When calculating operating status, in addition to assessing overdue tasks, missing mandatory components, and whether there's an open work package on an aircraft, CAMO uses a fault escalation model to correlate fault severity with aircraft operating status:

- Each fault code that your organization uses is assigned a fail severity order number in the Ref_fail_sev table.
- Each aircraft operating status is assigned an operational order number in the Ref_inv_oper table. The lowest order number is assigned to the NORM status and the highest order number is assigned to the AOG status.

For an aircraft to have a particular operating status, the most severe fault on the aircraft has to have a severity order number that is equal to or higher than the operational order number for the status and lower than the value for the next status up in the escalation model. For example, if the operational order numbers are:

```
AOG - 80
OPEN - 26
NORM - 20
```

then

- If the aircraft has only faults with severity 20-25, the operating status is NORM (barring other factors in the calculation)
- If the aircraft has faults with severity 26-79, the operating status is OPEN (barring other factors in the calculation)

The MEL operating status is optional. If configured, this status is considered in the fault escalation calculation. The MEL operating status indicates the aircraft has one or more deferred MEL faults.

For additional information, see the fault severity section in *Fault definitions* .

What does the aircraft operating status mean?

Operating status	Means	Caused by
AOG	Aircraft is not flight-worthy	• Overdue task • Missing mandatory components • AOG fault
OPEN	Aircraft might need further assessment. (The OPEN status does not drive functionality in CAMO - it only serves as an indicator).	• Undeferred fault with an Unknown severity (not AOG) • Faults whose severity order number correlates to the OPEN operating status.
INM In Maintenance	Aircraft is in maintenance	• Work package is started • No open faults • There might be deferred faults
NORM	Aircraft all meets normal operating conditions	None of the above conditions exist. Aircraft can have deferred faults whose severity order number correlates to the NORM operating status.

Capacity Pattern Setup tab

The Capacity Pattern Setup tab allows you to view, create, delete, and duplicate capacity patterns. A capacity pattern is a pattern of shifts for either a one- or seven-day cycle. You use capacity patterns to set up the nominal capacity of maintenance locations when planning heavy maintenance visits.

The following buttons appear on the Capacity Pattern Setup tab:

- Create Capacity Pattern: Click this button to create a new capacity pattern.
- Delete Capacity Pattern: Select a capacity pattern, then click this button to delete it.
- Duplicate Capacity Pattern: Select a capacity pattern, then click this button to duplicate it.

The table on the Capacity Pattern Setup tab contains the following columns:

- Capacity Pattern: The name of the capacity pattern. Click the name to view the capacity pattern details.
- Type: The type of the capacity pattern (either daily or weekly).

Planning Types tab

The Planning Types tab lists the existing planning types that long range and production planners use to estimate how much non-routine work is likely to occur during heavy maintenance visits. Users with the correct permissions also use this tab to create, modify, and delete planning types as needed.

Planning types contain an approximation of how many hours of non-routine work are generated for every hour of work on a specific aircraft type, and the skills needed to complete this non-routine work. To create non-routine estimates, planners assign the correct planning types to tasks.

The table on the Planning Types tab displays the following information for each existing planning type:

- The Code and Name of the planning type.
- NR Factor: The number of hours of non-routine work generated for each hour of work of the initiating task, that is, the task to which the planning type is associated.
- Fleet Type: The type of aircraft to which the planning type applies.
- NR Skill and %: The skills needed by the personnel who will complete the non-routine work, and the percentage of the non-routine work that requires each of the skills.

Shift Setup tab

The Shift Setup tab allows you to view, create, and delete shifts. A shift is the period of time that a person spends at work; it has a defined start time and a duration. The net hours worked in a shift can be less than the shift duration, if breaks are allowed. Shifts are used by various CAMO planning tools to set the nominal capacity available at maintenance locations.

The following buttons appear on the Shift Setup tab:

- Create Shift: Click this button to create a new shift.
- Delete Shift: Select a shift, then click this button to delete it.

The table on the Shift Setup tab contains the following columns:

- Shift: The name of the shift. Click on the name to view the shift details.
- Start Hour: The time the shift begins.
- Duration: The total number of hours in the shift.

- Work Hours: The number of working hours in the shift.

Capacity Pattern Details page

The Capacity Pattern Details page displays the information related to the selected capacity pattern.

The Details are displays the Code, Name, and Description of the capacity pattern.

The Capacity Pattern Details page contains the following tab pages:

- Shifts: Displays all of the days, shifts, labor skills, and labor profile that make up this capacity pattern.

Shifts Tab

The Shifts tab includes the following buttons:

- Edit Labor Skills for Capacity Pattern: Click this button to add new labor skills to the capacity pattern.
- Edit Shifts for Day: Click this button to edit the shifts that are included for each day of the capacity pattern. For a weekly capacity pattern, you must select one day before clicking this button.
- Edit Labor Profile: Click this button to edit the number of licensed and unlicensed resources for each shift in the capacity pattern.

The table in the Shifts tab lists the details for the capacity pattern. The columns are as follows:

- Day: For a weekly capacity pattern, lists the days from Monday through Sunday. This column does not appear for a daily capacity pattern.
- Shift: Lists the shifts that are included in the capacity pattern.
- Labor Skill: List the type(s) of labor that are included in the capacity pattern.
- # of Resources: Lists the number of licensed and unlicensed workers planned, and the total by labor skill.
- # of Hours: Lists the number of work hours for each labor skill and day, and the total hours for each shift and day. The total number of work hours in each row of the table is determined by multiplying the work hours in the shift by the total number of resources in the row.

Aircraft groups

Aircraft groups

CAMO includes several fleet view planning tools. These tools provide you with different views of the state of the fleet, for example, Fleet List, Fleet Due List, or Planning Viewer. The aircraft grouping feature allows you to categorize your fleets for more manageable (and performance conscious) viewing. You can create aircraft groups from the Manage Aircraft Groups page and assign an aircraft to any number of groups from the Aircraft Group Details page.

Note If your organization uses authorities filters**,** the aircraft seen within an Aircraft Group will be filtered by your authorities. Therefore, keep this in mind when managing your aircraft groups.

Create aircraft groups

About this task

The Create Aircraft Group page allows you to create aircraft groups. You can then add aircraft to these groups to easily manage them. Every aircraft group must have a unique name.

Steps

1. Click the down arrow next to the CAMO logo, and then click **Line Planner** > **Manage Aircraft Groups**.
2. Click **Create Aircraft Group** and enter a unique name for your group.
3. Add a description (if needed), and then click **OK**.

After the group is created, you can add aircraft to it.

Related tasks

Add aircraft to aircraft groups

Add aircraft to aircraft groups

About this task

You can assign an aircraft to any number of aircraft groups. You can begin adding new aircraft to an existing group from the Aircraft Group Details page.

Steps

1. Click the down arrow next to the CAMO logo, and then click **Line Planner** > **Manage Aircraft Groups**.

2. Click the link to the required aircraft group, and then click **Add Aircraft**.
3. From the list of aircraft found, select the required aircraft and click **Assign Aircraft**.

   The added aircraft are now listed under the Aircraft Group Details page.

> **Note** To see a complete list of aircraft and the aircraft groups to which they are assigned, click the Group Assignments tab under the Manage Aircraft Groups page.

Delete aircraft groups

About this task

You can delete unwanted aircraft groups from the Manage Aircraft Groups page.

Steps

1. Click the down arrow next to the CAMO logo, and then click **Line Planner** > **Manage Aircraft Groups**.
2. Select the check box(es) next to the group(s) you want to delete.
3. Click **Delete Aircraft Group**, and then click **Yes** to confirm.

Use aircraft groups on the Fleet List and Fleet Due List

About this task

By default, all aircraft in your organization are visible on the Fleet List and Fleet Due List. However, you can use aircraft groups to make it easier to manage large numbers of aircraft.

For example, suppose your organization has several types of 737s but you only want to view the 737 Maxx aircraft in your fleet. You can create a group for this type of 737, and then you can show this group only on the Fleet List and Fleet Due List. If you haven't created any groups, see *Create aircraft groups*.

Steps

1. On your to-do list, click either the **Fleet List** tab or the **Fleet Due List** tab.
2. Click **Options**.
3. In the **Aircraft Groups** area, select the **Show selected groups only** check box.
4. Click the groups you want to show, and then click **Apply**.

   CAMO saves the groups you select, so you'll see the same groups the next time you log on.

Planning viewer

Planning Viewer

Planning Viewer provides a graphical interface that shows all non-historical flights — those that are planned, and those that are in progress — and the work packages that are planned and in progress for all aircraft in the fleet. The Planning Viewer also gives you a visual indication when an aircraft has tasks that are not assigned to a work package or has scheduling conflicts.

Although the Planning Viewer is intended for use in planning line maintenance, it displays all work packages that exist for the aircraft — even those created for heavy maintenance. This helps the line planner by showing when the aircraft will be out of service to undergo heavy maintenance. Also, the line maintenance planner can choose to package some routine work into an upcoming heavy maintenance package when it is appropriate and convenient.

Planning Viewer user interface

Each row on the Planning Viewer represents an aircraft, and the following table describes the user interface (UI) in detail:

UI item	Description
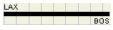	A thin, black bar indicates a flight. The departure and arrival airport codes appear above and below the bar, respectively.
	A gray bar indicates a scheduled work package. The airport code indicates where the work package is scheduled to be completed or where the work package is currently being performed. A red bar indicates a work package with a scheduling conflict (see below). The code of the airport where the work package is scheduled, or in work, appears inside the bar. The start and end times shown are the scheduled start and end times. For work packages that are in work, they are the actual start time and estimated end time.
	A green diamond indicates an unscheduled work package.

UI item	Description
	A red diamond containing an exclamation point indicates an unassigned task or fault for the asset. The diamond appears at the due date of the unassigned task or fault.

Scheduling Conflicts for Work Packages

Scheduling conflicts change the color of the bar representing a work package from gray to red. Scheduling conflicts occur when any of the following are true:

- The work package start and end dates do not line up with the arrival or departure time of the aircraft.
- The work package includes a task that is due before the scheduled start time of the work package; there is a risk of the task becoming overdue and grounding the aircraft.
- The work package is scheduled at a location that does not match the arrival location of the preceding flight.

Tip Pause your mouse pointer over a diamond or a bar to view details of the task, work package, or scheduling conflict in a ScreenTip.

You can zoom in and out of the time line shown in the viewer, and filter the list to show only the aircraft that have unassigned tasks, those that have unscheduled work packages, or those that have scheduling conflicts. You can also choose to display tasks with soft deadlines, which are normally not shown.

The **Reload** toolbar button updates the Planning Viewer with the latest information for flights, tasks, and work packages. CAMO is configured to allow a maximum of 30 days for which to see flights and work packages. Administrators can change this value. For more information about this configuration option, and the recommended maximum memory setting for users of the Planning Viewer, see the "Configuring Line Maintenance Planning Tools" section in the *CAMO Administration Guide*.

Start Planning Viewer

Prerequisite

- PV permission settings are configured for your user role.
- The Launch Planning Viewer button is on your to-do list.
- You know your server name and port number.

Contact your CAMO Administrator for assistance with these prerequisites if they have not already been configured for you.

About this task

Planning Viewer (PV) is a component that you launch from within CAMO.

Steps

1. On your to-do list, click **Launch Planning Viewer**.

   The Planning Viewer opens in a new application window.
2. If you see a dialog box asking you whether you want to run the application, click **Run**.
3. In the **Login** dialog box, provide the following information:
   - The name of the server hosting CAMO and the port number.
   - Your user name and password.

Filter the Planning Viewer

Steps

On the toolbar, do any of the following:

- Use the calendar widget icon to choose the date.
- Use the zoom in or zoom out icons to display fewer or more days, respectively.
- Enter a buffer in minutes between flight land and work package and/or work package and takeoff. For example, suppose you schedule a work package for an aircraft that is due to depart in 30 minutes. If the work package will take 32 minutes to complete, you can use a buffer of 5 or 10 minutes to prevent the Planning Viewer from flagging the flight as having a scheduling conflict. The Planning Viewer will add the buffer window to the start of the flight, so that anything falling within the window will not be flagged as a conflict.
- Enter a value (in days) to show only those flights, tasks and work packages that occur within that specific number of days.
- Use the **Only load aircraft with assembly code** list to display the aircraft in a specific assembly.
- Use the **Only load aircraft in group** list to display the aircraft in a specific group.
- Select the **Load tasks with soft deadlines** check box to view work packages without a driving deadline.

- Select the check box(es) to show only aircraft with unpackaged tasks, unscheduled work packages, and/or scheduling conflicts.

The Planning Viewer then loads the aircraft according to the selected filters.

View aircraft, flight, task, and work package details

About this task

You can view details of an aircraft, flight, task and work package from the Planning Viewer.

Steps

Do any of the following:

To view the details of a(n)	Do this
Aircraft	Click the aircraft in the **Aircraft** column, and then click the **Aircraft Details** icon .
Flight	Click the bar representing the flight, and then click the **Flight Details** icon .
Task	Click the red diamond, and then click the **Task Details** icon .
Work package	Click the gray or red bar or the green diamond, and then click the **Work Package Details** icon .

The details page appears in a new CAMO browser window.

Create a work package for an unassigned task

Line planners can create a work package for an unassigned task.

About this task

The flight and the unassigned task must be for the same aircraft.

Steps

1. Click a flight (black bar), then hold down the Shift key and click an unassigned task (red diamond) in the same row.
2. On the toolbar, click the **Create Work Package for Task** icon .

   The Create Work Package page appears in a new CAMO browser window.
3. Provide the required information. Note the following:
   - **Scheduled Hours Multiplier**: Use this field if you think that it will take more or less time to complete the work package than the current estimated duration of the included tasks.

This field appears with a default value; alternatively, enter a value by which the estimated duration will be multiplied to obtain a more realistic time estimate.

4. Click **OK**.

Create a work package in Planning Viewer

Line planners can create a work package for a flight in Planning Viewer.

Steps

1. Click the flight (represented by a bar with departure and arrival codes) that you want to add the work package to.
2. On the toolbar, click the **Create Work Package** icon .

   The Create Work Package page appears in a new CAMO browser window.
3. Provide the required information. Note the following:
   - **Scheduled Hours Multiplier**: Use this field if you think that it will take more or less time to complete the work package than the current estimated duration of the included tasks. This field appears with a default value; alternatively, enter a value by which the estimated duration will be multiplied to obtain a more realistic time estimate.

You can now add tasks to the work package and schedule it. Once it is scheduled, it can be viewed from the Planning Viewer.

Related tasks

Add tasks and faults to a work package

Reschedule a work package

About this task

You can reschedule a work package from the Planning Viewer.

Steps

1. Click a work package (green diamond).
2. On the toolbar, click the **Reschedule Work Package** icon .

   The Schedule Work Package page appears in a new CAMO browser window.
3. Provide the required information. Note the following:
   - **Collection Required**: Select this option if you want a supervisor to flag all task cards in CAMO that are collected on paper when the work is done.
   - **Scheduled Location**: Click Select Location to select the maintenance location where the work package will be done.

- **Scheduled Start/End**: Select the date and time when the work package is scheduled to begin and end.

4. Click **OK**.

Assign an unassigned task to a work package

You can assign an unassigned task to a work package in Planning Viewer. A red diamond indicates an unassigned task.

Steps

1. Click a red diamond, and then hold down the Shift key and click a work package to select both items.
2. On the toolbar, click the **Assign Task to Work Package** icon .

   CAMO adds the task to the work package and displays your to-do list in a new browser window.

Schedule an unscheduled work package to a flight

About this task

You can schedule an unscheduled work package to a flight in Planning Viewer.

Steps

1. Click a flight , then hold down the Shift key, and then click a work package or work package with a conflict .
2. On the toolbar, click the **Reschedule Work Package to Flight** icon .

   The Schedule Work Package page appears in a new CAMO browser window.
3. Provide the required information. Note the following:
   - **Collection Required**: Select this option if you want a supervisor to flag all task cards in CAMO that are collected on paper when the work is done.
4. Click **OK**.

Line Planning Automation

Line Planning Automation (LPA) is a planning tool that automatically creates work packages for turn and service checks, and schedules (or reschedules) these work packages.

To schedule the work packages to suitable line locations and ground stops, LPA uses the information from the flight schedule. Authorized users can run LPA, monitor its status, and view the results from the Line Planning Automation to-do list page. For information about what must

be set up in the maintenance baseline before you can use LPA to create turn and service work packages, read the topics on turn and service checks.

When a user runs LPA, the user selects a fleet—an aircraft type—and the planning range, which is the number of days for which LPA should schedule turn and service checks. LPA creates the turn and service checks that are required during the planning range for all aircraft of the selected type. It creates the work packages, and it attempts to schedule the work packages to suitable ground stops and maintenance locations. A suitable ground stop is one that is scheduled to start within the planning range selected by the user. If LPA cannot schedule some of the work packages, it creates an issue record that indicates the reason for the failure.

LPA also reschedules existing checks and work packages if changes were made to the flight schedule that make the scheduled ground stop no longer suitable, or because of conflicts with other work packages that were scheduled during the ground stop. If there are existing turn and service work packages that are scheduled at ground stops that are no longer suitable, but LPA cannot find another suitable ground stop within the planning range, it leaves these work packages intact. It leaves their scheduled date, scheduled location, and workscope as they are, and creates an issue record that states No Suitable Stop as the failure reason.

In addition to suitable ground stops, LPA considers the following factors:

- For service checks, the due dates and planning yield
- Duration of the check
- Work type capabilities of the line maintenance locations
- Conflicts with other scheduled work packages

For service checks, LPA looks at the due date and the minimum planning yield value of the service block, and tries to schedule the check at the latest possible ground stop that starts after the minimum planning yield date, but before the due date of the driving task of the service block. LPA only considers the minimum planning yield value set on the service block, not the minimum planning yield value set on the requirements that are included in the block. LPA tries to schedule or reschedule service checks when one or all of the following are true:

- The due date of the block is before the end of the planning range selected by the user.
- The start date of the work package that contains the service block is before the end of the planning range.

Note Service blocks whose planned due date was outside the planning range but has since changed to be within the planning range are also scheduled when you run LPA. This change in due date can happen when a service block is scheduled based on the actual start date or end date of the previous occurrence of the block, and the previous occurrence was started or completed earlier than planned.

Turn checks are meant to be performed before the aircraft departs, and they do not have deadlines. Therefore, LPA attempts to schedule a turn check at each ground stop of the aircraft, unless a service check is scheduled during that ground stop.

LPA considers the estimated duration set in the block definition of the check to determine how much time is required to complete the work, and to identify the ground stops that are long enough to complete the work.

LPA schedules turn and service work packages only to locations that have all the work types that are assigned to the work packages. You select the work types of the turn and service work packages on the Line Check Settings page.

LPA does not repackage tasks to meet scheduling requirements, nor does it consider the labor capacity of the line maintenance locations or the availability of parts and tools required for the maintenance tasks.

Related concepts

Turn checks and service checks

Related tasks

Select turn and service check settings

What LPA schedules

LPA does not schedule or modify the following work packages that exist for an aircraft:

- Heavy maintenance work packages
- Line maintenance work packages that are neither service work packages or turn work packages
- Any work package that you exclude from LPA, including turn and service work packages

LPA does not schedule any turn and service work packages in ground stops that already have a scheduled work package that is a heavy maintenance work package, a work package created by LRP, or a work package that is committed or in work.

LPA does not unassign or attempt to reschedule any turn and service checks that meet any of the following conditions:

- The check is in a work package that is excluded from LPA. If any excluded work package that includes a turn or service check is in conflict with the latest flight schedule, or with the turn and service work packages that LPA is trying to schedule, this is recorded in the issues list generated by LPA. You must resolve these scheduling conflicts manually.
- The check is included in a heavy maintenance work package.
- The check is included in a work package created by the Long Range Planner (LRP).
- The check is in a work package that is committed or in work.

Running LPA and viewing results

When you run Line Planning Automation, CAMO does the following for each aircraft:

- Removes the results of the previously completed LPA run for that aircraft type from the Line Planning Automation to-do list tab page.
- Derives the ground schedule for the aircraft from the flight schedule.
- Identifies the ground stops when excluded work packages are scheduled, and excludes these ground stops and work packages from LPA.
- Attempts to schedule turn and service checks at the most suitable ground stop by creating new work packages or rescheduling existing work packages as required.
  - LPA does not schedule more than one work package for a ground stop.
  - LPA schedules service work packages first, then turn work packages.
  - When LPA reschedules an existing turn or service work package, it updates all variable elements that are included in the work package name to their current value. For example, if the code of the arrival airport is included in the work package name, and the arrival airport where LPA reschedules the work package changes due to a change in the flight schedule, LPA uses the most recent airport code in the work package name. See *Turn and service work package names*.
- Records any issue that prevents the scheduling of a work package in any of the previous steps.
- Alerts designated users at the completion of each LPA run. The alert indicates whether LPA completed with or without issues.

Tip If nothing happens when you run LPA, verify the following:

- At least one block definition is assigned to the aircraft type you selected.
- The block definitions are activated.
- Automation was enabled for the aircraft type on the Line Check Settings page.

CAMO displays the status and the results of each LPA run in a table on the Line Planning Automation to-do list tab. You can delete the rows for previous runs, using Clear Selected Runs. A newly started LPA run has a status of Queued. When a run completes, its status changes to Completed. To monitor the status of a new LPA run, refresh your Web browser page until the status changes to Completed.

Issue type	Description
Unexpected Error	An unexpected error occurred.
Locked Inventory	The aircraft is locked, which prevents automation.
Automation Prevented	Automation is prevented for this aircraft.

Issue type	Description
Check Conflict	The check overlaps with another work package.
Flight Conflict	The check occurs during a flight.
Stop Conflict	The check spans multiple stops.
No Suitable Stop	No suitable aircraft stop exists in which to schedule the check.

You should run LPA again whenever the flight schedules or other constraints change.

Related concepts

Turn and service work package names

Related tasks

Select turn and service check settings

Exclude aircraft and work packages from LPA

You can exclude specific tail numbers and work packages from LPA.

About this task

When LPA runs, it does not create or schedule any work packages for the excluded aircraft, nor does it reschedule any of the existing work packages for the aircraft.

Steps

Do one of the following:

- On the aircraft **Inventory Details** page, or the **Work Package Details** page, click **Prevent Line Planning Automation**.
- On the **Line Planning Automation** tab, **Aircraft Prevent LPA** area, click **Assign** and select the aircraft to exclude from LPA, then click **Assign**. You can select more than one aircraft.

The excluded aircraft or work package appears on the Line Planning Automation tab, in either the Aircraft Prevent LPA or Work Package Prevent LPA area.

The Line Planning Automation to-do list tab lists all aircraft and work packages that are excluded from LPA. On this tab, you can easily allow line planning automation for any excluded aircraft and work package, and quickly access the details page for the aircraft and work packages.

Station Monitoring

Station Monitoring is a dashboard that displays tiles with information for flights inbound to a station, currently at the station, and departing the station. It also combines flight information with maintenance information to help line maintenance personnel identify what actions they need to take on aircraft.

Each Station Monitoring tile displays the:

- assembly
- tail number (click this number to view the aircraft details)
- operating status (AOG, AWR, INM, MEL, NORM, OPEN)
- arrival and departing location of the inbound and outbound flight and whether the flight is on-time, early, or late
- previous, current or upcoming station
- current gate
- timer for arrival and departure times (see the legend below for more information)
- status of the work package (if applicable)

The Station Monitoring application automatically refreshes the data every 3 minutes. However, you can manually update the data shown in the application by refreshing/reloading your browser window.

Red colored tiles indicate an Aircraft On Ground (AOG) status. Grey tiles indicate all other operating statuses.

The following table identifies the icons in Station Monitoring and provides a description of them:

Icon	Description
	Indicates the arrival flight number.
	Indicates the departure flight number.
	Indicates the difference in time between the scheduled arrival and departure (if the scheduled arrival time is greater than the current time). Otherwise, it displays the difference between the current time and the departure time.
	Indicates the aircraft is en route to the station.
	Indicates that the flight is on time.

Icon	Description
	Indicates that the flight is early.
	Indicates that the flight is late.
	Indicates the aircraft's arrival/departure gate.
	Indicates that there is a work package in progress, and it indicates the number of tasks and completed tasks in the work package. For example, "2/6" indicates two out of six tasks have been completed.
	Indicates that the work package has not been started.
	Indicates that the work package has been completed.
	A number with a red background indicates the number of open, unassigned logbook faults.
	A number with a yellow background indicates the number of assigned logbook faults.

Sort and filter in Station Monitoring

By default, Station Monitoring displays all of the assemblies based on the arrival time. That is, the next assembly due to arrive will appear at the top left of the Station Monitoring dashboard. However, you can sort and filter as follows:

- Sort by arrival or departure times (and reverse the sort order).
- Filter by assembly. For example, you can choose to filter the Station Monitoring view to only show your 737-200 aircraft.
- Filter by time (8, 12, or 24 hours). For example, if you select 8 hours, all aircraft that have arrived in the last eight hours, or are scheduled to arrive in the next eight hours, are displayed. Similarly, any departures that are scheduled to occur in the next eight hours are displayed. Any scheduled arrivals or departures outside of the eight-hour window will not appear in Station Monitoring. Finally, once an aircraft has left the station its tile will disappear.

Raise faults from Station Monitoring

Steps

1. Click the more icon ⋮ for the flight, and then click **Raise Fault**.
2. Do one of the following:

To	Do this
Log a fault and close it	Click **Log fault and close**. Do this if the fault was addressed. By doing this, CAMO makes a record of the problem and the work done to address it. CAMO creates a work package, includes the fault in the work package, completes both the fault and the work package.
Log a fault and defer it	Click **Log fault and defer**. Do this for faults that are not urgent, but should be fixed at a later maintenance visit.
Log a fault and leave it open	Click **Log fault and leave open**.
Log a fault and request a part	Click **Log fault and request part immediately**. Do this for faults that must be addressed and a part is needed immediately.

3. Complete the remaining fields as required. See related topics for information on completing the fields.

Related tasks

Raise a logbook fault and leave it open
Raise a fault and request a part immediately
Raise a logbook fault and close it
Raise a logbook fault and defer it

Create a blank work package from Station Monitoring

Line maintenance planners can create a new work package from the Station Monitoring application.

Steps

1. Click the more icon ⋮ for the flight, and then click **Create Blank Work Package**.

   The **Create Work Package** page opens in a new tab in CAMO.

2. Provide the required information. Note the following:
   - **Scheduled Hours Multiplier**: Use this field if you think that it will take more or less time to complete the work package than the current estimated duration of the included tasks. This field appears with a default value; alternatively, enter a value by which the estimated duration will be multiplied to obtain a more realistic time estimate.
3. Click **OK**.

Create a service work package from Station Monitoring

Line maintenance planners can create work packages from the Station Monitoring application, for service checks.

Steps

1. Click the more icon ⋮ for the flight, and then click **Create Service Work Package**.

   The **Create Service Work Package** page displays in a new tab in CAMO.
2. Provide the required information. Note the following:
   - **Scheduled Hours Multiplier**: Use this field if you think that it will take more or less time to complete the work package than the current estimated duration of the included tasks. This field appears with a default value; alternatively, enter a value by which the estimated duration will be multiplied to obtain a more realistic time estimate.
3. Click **OK**.

Create a turn work package from Station Monitoring

Line maintenance planners can create work packages from the Station Monitoring application, for turn checks.

Steps

1. Click the more icon ⋮ for the flight, and then click **Create Turn Work Package**.

   The **Create Turn Work Package** page displays in a new tab in CAMO.
2. Provide the required information. Note the following:
   - **Scheduled Hours Multiplier**: Use this field if you think that it will take more or less time to complete the work package than the current estimated duration of the included tasks. This field appears with a default value; alternatively, enter a value by which the estimated duration will be multiplied to obtain a more realistic time estimate.
3. Click **OK**.

Station Monitoring fault packaging rules

There are several factors that determine how CAMO packages faults from Station Monitoring.

The following flow chart summarizes how CAMO packages faults from Station Monitoring:

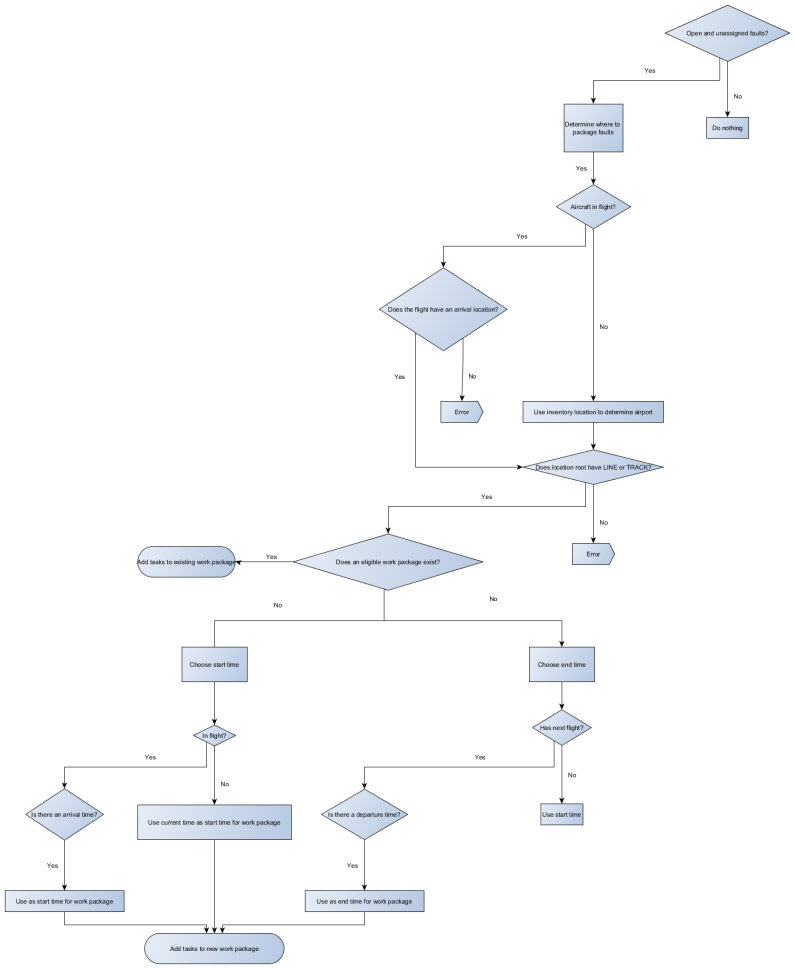

When packaging one or more faults into a work package, CAMO tries to find a suitable existing work package first. A suitable work package is one that is:

- Scheduled to start before the aircraft's next departure (if it has a next planned flight).
- In a COMMIT or IN WORK state.
- Scheduled at a LINE or TRACK location where the aircraft is currently located (using the AIRPORT), or will be located once it arrives at its destination if it is in flight.

If a suitable work package does not exist for the aircraft (it does not meet any of the criteria listed above), then the faults are packaged into a new work package. The new work package is automatically committed and is given a system-generated name using the following format: "Packaged Faults – [DATE AND TIME OF FAULT PACKAGING]".

The created work package is scheduled to a LINE location, or TRACK if no LINE locations are found under the aircraft's current location or arrival location (if it's in flight). As above, if the aircraft

is in flight, CAMO will search the flight's destination airport for a LINE or TRACK location. The start date of the work package will either be immediately (if the aircraft is on the ground) or at the arrival time (if it is in flight). The end date of the work package will be either the next planned flight's departure time, or, if there is no next planned flight, it will be set to the start date of the work package. The new work package will have the default sign-off requirements that are configured in CAMO.

Related tasks

Package open faults from Station Monitoring

Package open faults from Station Monitoring

You can package faults raised during a flight from Station Monitoring, which allows you to prepare for work at a station before the flight arrives.

About this task

If there is an existing, open work package at the plane's current or upcoming destination, CAMO adds the faults to it. Further, if the aircraft is in flight, CAMO checks for a work package at the arrival destination. If there is not an existing work package with a scheduled start date before the next scheduled outbound flight, CAMO creates a new work package, adds the faults to it, schedules it, and commits it.

Steps

Click the more icon ⋮ for the flight, and then click **Package Fault(s)**.

The faults are added to a work package. If a new work package is created, CAMO names the work package using the following format: "Packaged Faults + [date and time of packaging]". In addition, CAMO creates a note indicating that the fault has been assigned to the work package on each fault's History tab.

> **Note** If a fault is packaged and the plane is diverted, you must update the work package location accordingly.

Related concepts

Station Monitoring fault packaging rules

5

Maintenance execution

The planning of maintenance activities differs between line, heavy, and shop maintenance, but many of the basic interactions that you do in CAMO to execute maintenance are the same regardless of the type of maintenance.

In line maintenance execution, aircraft are not removed from the flight plan and Maintenance Operations Control (MOC) works closely with technicians to make decisions on deferring open faults and communicate flight disruptions. Work packages are smaller and executed within hours instead of days.

In heavy maintenance, aircraft are removed from the flight plan. Work packages often contain hundreds of tasks that are typically assigned to crews instead of individuals. Recording time spent and time remaining on tasks is important to production planners who continuously monitor and update plans.

Work packages

For scheduling, tracking, and organizing purposes, work packages group tasks that are executed during maintenance visits. Work packages can contain only one task or hundreds. They are created automatically in various workflows, manually by planners, MOC, and others, or can be loaded into CAMO using dataloading tools.

You can create an empty work package for an aircraft or component and then add tasks and faults to it, or you can select tasks or faults for an aircraft or component, and create the work package to include those tasks or faults.

You can continue to add tasks and faults to a work package after it has been created.

Work packages are created automatically in different workflows and can be created manually using different approaches. For example:

- For any type of maintenance—line, heavy, or shop—you can create work packages manually from several to-do lists and details pages in CAMO.
- For line maintenance, you can create turn work packages and service work packages to create turn checks and service checks. Depending on how your baseline is set up, creating turn and service check work packages is a partially automatic process.
- For shop maintenance tasks that must be performed on a component by a specific due date, CAMO creates work packages automatically when the tasks to be executed are created.
- When an unserviceable component is removed from the parent inventory; for example, when an engine or a tracked part is removed from an aircraft, CAMO automatically creates a work package.
- For heavy maintenance, the Long Range Planner (LRP) application creates work packages automatically.

After work packages are created, a variety of roles take the next steps in the process and manage the work package to completion. Steps in the process include:

Adding unassigned tasks and faults to the work package

The Assigned Tasks tab for the work package shows all the tasks that are assigned to the work package. Job cards are displayed under their parent requirements. Production planners review the Unassigned tab to see if there are other ACTV tasks or faults that can or should be brought into the work package. Using the View Opportunistic Tasks button, you can also view tasks are opportunistically linked with tasks in the work package and if you have the resources to do the work, you can assign the tasks to the work package.

Generating the workscope

The workscope is the collection of executable tasks that make up a work package - executable requirements, job cards, ad hoc tasks, and faults. At any time while you are packaging tasks, you can generate the workscope to see a list of all the executable tasks in the work package. Generating the workscope adds the Workscope tab to the Work Package Details page. The Workscope tab lists all executable tasks as numbered line items. Note that if a requirement has job cards, you don't see the requirement on this tab, only it's job card sub-tasks.

Generating the workscope also generates the open and close job cards for aircraft panels (if your organization uses master panel card task definitions), and suppresses duplicate job cards from the workscope. The workscope does include duplicate job cards if the same job card definition is assigned to two different requirements included in the workscope. You can make further adjustments to the workscope as needed, clear the workscope, and regenerate it as many times as you need before you commit the workscope.

Scheduling the work package

You can schedule a work package as soon as it's created.

When you schedule or reschedule a work package, you set the start date, end date, and the location where the work will be done. You can schedule a work package initially with just the start and end dates and add the location later.

Before you can commit the workscope or start a work package, the work package must be scheduled - including start date, end date, and location.

After a work package is scheduled, a Work Package Number is generated.

Committing the workscope

After the workscope of a work package is defined, you commit the workscope. Committing the workscope does the following:

- Runs auto-reservation to fulfill open part requests. Part requests that are not fulfilled using auto-reservation appear on the material controller's (or warehouse manager's) to-do list.
- Aircraft work packages that were created in Long Range Planner (LRP) are no longer controlled by LRP. Workscope and scheduling changes are now made in CAMO.
- Updates the location of tasks in the work package either to the same location as the work package or if it's a component work package, updates task locations to ones that are assigned the capability to perform the task work type.

Any time after the workscope is committed, you can generate the tally sheet - this is usually done when the work package is complete, but can also be done periodically to monitor progress.

If a work package isn't started, you can click the Uncommit Scope button to undo the commit operation. Undoing the commit operation removes the date and location from part requests, and cancels any part reservation created manually or automatically.

Modifying the workscope after the commit point affects material reservation and can result in a shortage of resources such as skilled labor and tools. You might also need to revise the end date for the work package.

If you do change the workscope after a work package is committed, rows of added tasks are visually separated from the tasks agreed to in the workscope by a line across the table on the Work Package Details. Tasks, such as faults, that are added after the work package is committed, are displayed below the line.

Starting work package

Starting a work package starts the maintenance visit. When a work package is started, its status changes to In Work, and tasks and faults within the work package can be started.

You don't start component work packages that are scheduled to external repair vendors; they are started automatically when the inventory is shipped to the repair vendor.

As work progresses, you can preview the release for a summary of potential issues that might prevent closure of the work package (and release to service if it's an aircraft work package).

Completion

When all the work has been performed — there are no more IN WORK labor rows on completed tasks, tasks and faults are completed or deferred, mandatory components are installed, and job cards are collected (if required)—production controllers can generate a tally sheet in preparation for reviewing and completing a work package.

Previewing the release is part of the work package completion process in which you resolve errors and warnings such as overdue tasks, missing mandatory components, or incomplete labor or part requirements.

An assembly is complete when all of its mandatory, applicable components are installed. On the Inventory Details page, Sub Inventory tab of an aircraft, if an aircraft is complete, you see a check mark in the Complete column. If there's no check mark, you can expand the list to see what's missing.

A background job evaluates aircraft completeness, but if there are no missing mandatory parts yet the aircraft is not complete, you can manually trigger the evaluation by clicking the Evaluate Completeness button (permission required for the button is ACTION_EVALUATE_COMPLETENESS).

CAMO can be configured to allow work package completion when there are missing components.

Related concepts

Changing a committed workscope
Duplicate job card suppression

Find a work package

About this task

Do any of the following:

- In the **Barcode Search** field, enter the work package barcode, and then press **Enter**.
- On the **Task Search** page, in the **Work Package Information** area, provide the information requested, and then click **Search**.
- On your to-do list, in the **Work Package** column of any tab, click a work package name.

Creating work packages

You can manually create a blank work package in CAMO by clicking the Create Work Package button.

For turn checks and service checks, you can go to your Fleet List tab and click Create Turn Work Package or Create Service Work Package. Work packages can be created for one or more tasks or faults by clicking the Create Work Package for Task or Create Work Package for Fault button.

Selecting either of these buttons brings you to the Create Work Package page. In the Work Package Information area, you can enter the required values and click OK to create the work package. When you create or view work packages, you see the following fields.

Work Package Information fields

Field Name	Description
Name	The name of the work package.
Work Type(s)	The type of work associated with the work package. For example, LINE, HEAVY, and TURN
Service Type(s)	The service performed for the work package. For example, INSPECTION and MOD.
Subtype	The code identifying the assembly subtype.
Doc. Reference	The names of any relevant technical manuals, books, records, or documents.
Description	A description of the work package
Heavy Maintenance	Select this option to mark the work package for heavy maintenance.
Collection Required	Select this option if you want a supervisor to flag all job cards in CAMO that are collected on paper when the work is done.
Issue To Account	The CAMO account linked to this work package.

Field Name	Description
Scheduled Hours Multiplier	Use this field if you think that it will take more or less time to complete the work package than the current estimated duration of the included tasks. This field appears with a default value; alternatively, enter a value by which the estimated duration will be multiplied to obtain a more realistic time estimate.
Release Number	The number auto-generated or entered by the technician that is authorizing the release of the aircraft from maintenance.
Release Remarks	Additional information entered by the technician that is authorizing the release of the aircraft from maintenance.

Related concepts

Move tasks and faults between work packages

Create work packages for an aircraft or component

You can create an empty work package for aircraft or components.

Steps

1. On your to-do list's **Fleet List**, **Unserviceable Staging**, or other tab that lists aircraft or components, select an aircraft or component, and click **Create Work Package**.
2. Provide the required information. Note the following:
   - **Scheduled Hours Multiplier**: Use this field if you think that it will take more or less time to complete the work package than the current estimated duration of the included tasks. This field appears with a default value; alternatively, enter a value by which the estimated duration will be multiplied to obtain a more realistic time estimate.
3. Click **OK**.

Create work packages for tasks or faults

You can select one or more tasks or faults to create a work package.

Steps

1. On the **Inventory Details** page, **Open** tab, **Open Tasks** sub-tab or **Open Faults** sub-tab, select one or more tasks or faults.

2. Click **Create Work Package for Task** or **Create Work Package for Fault**.
3. Provide the required information. Note the following:
   - **Scheduled Hours Multiplier**: Use this field if you think that it will take more or less time to complete the work package than the current estimated duration of the included tasks. This field appears with a default value; alternatively, enter a value by which the estimated duration will be multiplied to obtain a more realistic time estimate.
4. Click **OK**.

Package open faults

You can quickly package all open faults raised during a flight into a new work package. Note that deferred faults will not be packaged.

About this task

If there is an existing, open work package at the plane's current or upcoming destination, CAMO adds the faults to it. If there is not an existing work package with a scheduled start date before the next scheduled outbound flight, CAMO creates a new work package, adds the faults to it, schedules it, and commits it.

Steps

1. On your to-do list, **Fleet List** tab, click the aircraft name.
2. On the **Inventory Details** page, click the **Open** tab > **Open Faults** tab.
3. Click **Package Open Faults**.

Work on deferred faults opportunistically

Prerequisite

- The unplanned fault has the status of Open or Defer.

About this task

As you work on an asset, be it an aircraft waiting at the gate or a component in the shop, you might see an opportunity to address a fault that exists for the asset but that was not planned for the current or upcoming maintenance—deferred faults, or open faults that are not assigned to a work package. For example, you might have the parts required for the unplanned work on hand, and the planned work might be completed earlier than anticipated.

In this situation, you can assign the unplanned fault to the work package that you are working on (or will work on shortly), package the fault in its own active work package that you will complete when the fault is addressed, or, in the case where you already did the work to address the fault, package and complete the fault in a single operation.

Steps

1. Click the **Fault Search** menu item.
2. On the **Fault Search** page, enter your search criteria to find the fault and click **Search**.

> **Tip** To find deferred and unassigned faults for a specific aircraft, you can select the aircraft by clicking next to Aircraft, and selecting **Unassigned Faults Only** in the **Work Package Information** area.

3. In the **Faults Found** list, click the check box beside the required fault.
4. To add the fault to an existing work package, do the following:
   - Click **Assign Fault to Work Package**.
   - On the **Assign Task to Work Package** page select the work package to which you want to assign the fault. The page lists in work, committed, active, and forecasted work packages for the inventory of the fault.
5. To include the fault in a new active work package, do the following:
   - Click **Create Work Package for Fault**.
   - On the **Create Work Package** page, provide the information requested and click **OK**.
6. If you have already completed the work for the fault, do the following:
   - Click **Package and Complete Fault**.
   - On the **Complete Fault** page, provide the information requested, and click **OK**.
   - If prompted, enter your password and click **OK**.

Add tasks and faults to a work package

Steps

Do either of the following:

- On the **Work Package Details** page, **Unassigned** tab, **Unassigned Tasks** sub-tab, select a task or tasks and click **Assign Task to this Work Package**.
- On the **Work Package Details** page, **Unassigned** tab, **Unassigned Faults** sub-tab, select a fault or faults, and click **Assign Fault to this Work Package**.

Unassign tasks and faults from a work package

As you plan work in the initial stages and replan work even after a work package is committed or started, you can unassign tasks or faults from work packages. Unassigned tasks or faults remain as open tasks or faults on the inventory.

About this task

When unassigning, you cannot remove a job card. You must unassign its parent requirement. Faults can be unassigned from a committed or started work package by roles with the ALLOW_UNASSIGN_OPEN_FAULT permission enabled, but these faults must be deferred or assigned to another work package for repair before the aircraft's next flight. If you unassign a task or fault from a work package after the workscope is created, the unassigned task or fault displays on the Workscope tab with a strikethrough.

Steps

1. Find the work package.
2. Go to the **Work Package Details** page, **Assigned Tasks** tab.
3. Select one or more tasks or faults, and click **Unassign Tasks and Faults**.

> **Tip** You can select a check box for a row and then drag the mouse pointer over multiple check boxes to select multiple rows in the list.

4. Depending on the state of the selected tasks or faults, you might see a confirmation message. Select **YES** to confirm.

Related tasks

Find a work package

Publish Work Package

CAMO publishes Work Packages to the Maintenance Execution system (MEX) when the Publish Work Package button is clicked. Having an equipment baseline that is aligned with a maintenance execution system makes it possible for CAMO to update specific details of tools, parts, measurements in the Work Packages.

The **Publish Work Package** button is enabled if the user has ACTION_PUBLISH_WORK_PACKAGE action parameter assigned and all of the following conditions are met:

- The Work Package has a scheduled start and end dates
- The Work Package is scheduled to a location
- The Work Package has a defined Workscope (via Commit or Generate Workscope) or the Work Package is canceled.

- For non-heavy maintenance Work Packages, the status is Active or Commit.
- For heavy maintenance Work Packages, the status is Commit

When the Work Package in CAMO has published the tasks, and faults, the update is sent to MEX. Based on the updates provided by CAMO, MEX updates the Work Package's date, location, and reflects its status. Any updates can be republished through the Publish button.

Note When a Maintenix user in IFS Cloud assigns a task or fault to a Work Package that is already in IN WORK status and has been started in the Maintenance Execution System (MEX), only the **newly assigned task or fault will be published to MEX**. The Work Package itself will not be republished

If the Workscope in CAMO is updated by assigning or un-assigning a task or fault to the Work Package it will be reflected in MEX when you click the **Publish Work Package** button. When a fault is deferred in the maintenance execution system, CAMO in turn would reflect that. However, if the assigned task/fault has basic data mismatches then there would be errors in what CAMO reflects.

Work Packages Configured to Auto-Publish

Both heavy and line maintenance work packages can be automatically published by their respective background jobs when they fall within a configured lead time window. Each background job evaluates whether a work package should be published based on the current date ("Today"), the WP's scheduled start date, the WP's scheduled end date, and a configurable lead time threshold. A work package is eligible when its scheduled start date falls within the lead time threshold from today and its scheduled end date has not yet passed.

The background job publishes **only work packages that have not been published before**, ensuring each work package is initially published only once. After the initial publish, an application trigger is responsible for publishing any updates when changes occur to the work package in near-real time. For Active work packages without a workscope, the job attempts to auto-generate the workscope.

Heavy Maintenance

- Lead time threshold configuration parameter: **HEAVY_MAINTENANCE_PUBLISH_LEAD_DAYS** (default: 30 days).
- Eligible statuses: **Commit**, **Cancel**, **In Work**, and **Complete**.

Line Maintenance

- Lead time threshold configuration parameter: **LINE_MAINTENANCE_PUBLISH_LEAD_TIME** (default: 48 hours).
- Eligible statuses: **Commit**, **Cancel**, **In Work**, and **Complete**.

Only work packages with **Active** status are eligible if parts have been requested. This feature is disabled by default; users must either run the background job manually or enable it for automatic execution (default: every six hours).

Auto-Publish Scenarios

The following scenarios illustrate when the background job will auto-publish a work package. The logic is the same for both heavy and line maintenance; only the lead time threshold value differs.

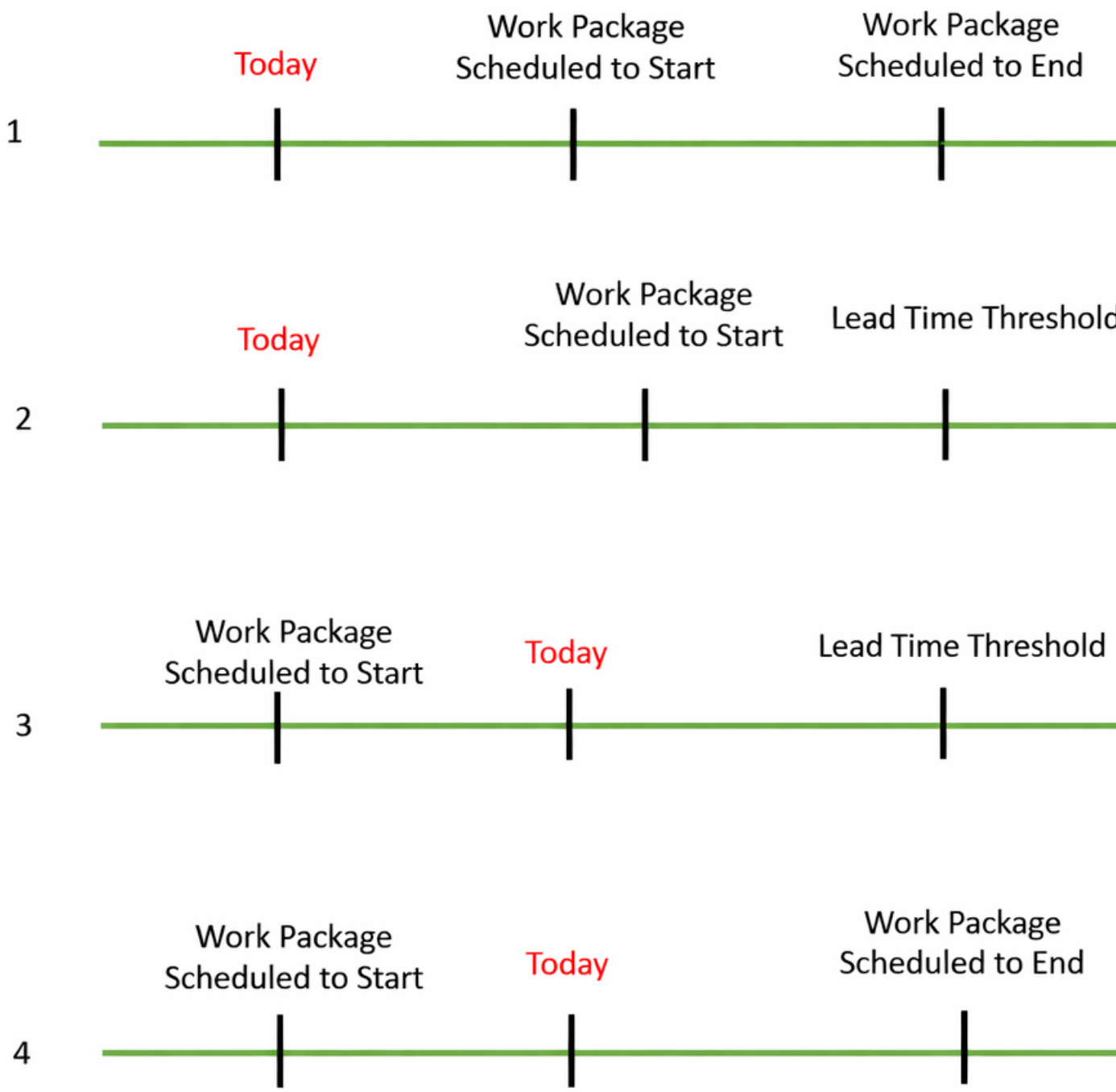
1
Today
Work Package
Scheduled to Start
Work Package
Scheduled to End
2
Today
Work Package
Scheduled to Start
Lead Time Threshold
3
Work Package
Scheduled to Start
Today
Lead Time Threshold
4
Work Package
Scheduled to Start
Today
Work Package
Scheduled to End

Scenario 1

The WP is scheduled to start in the future (after "Today") and is scheduled to end before the threshold expires.

Scenario 2

The WP is scheduled to start in the future (after "Today"). The end date is before the threshold window (i.e., after the threshold expired).

Scenario 3

The WP start date is before "Today" (meaning the WP has already started). The end date is after the threshold window (i.e., still ongoing after the threshold).

Scenario 4

The WP started before "Today" (i.e., it is already in progress). The work package end date is before the threshold expires (meaning it will be completed within the threshold window).

Scenarios Where Work Package Scheduled Jobs Do Not Auto-Publish

While auto-publishing ensures WP are made available based on a predefined threshold, there are cases where the process does not

trigger. The following scenarios illustrate when auto-publishing does not occur:

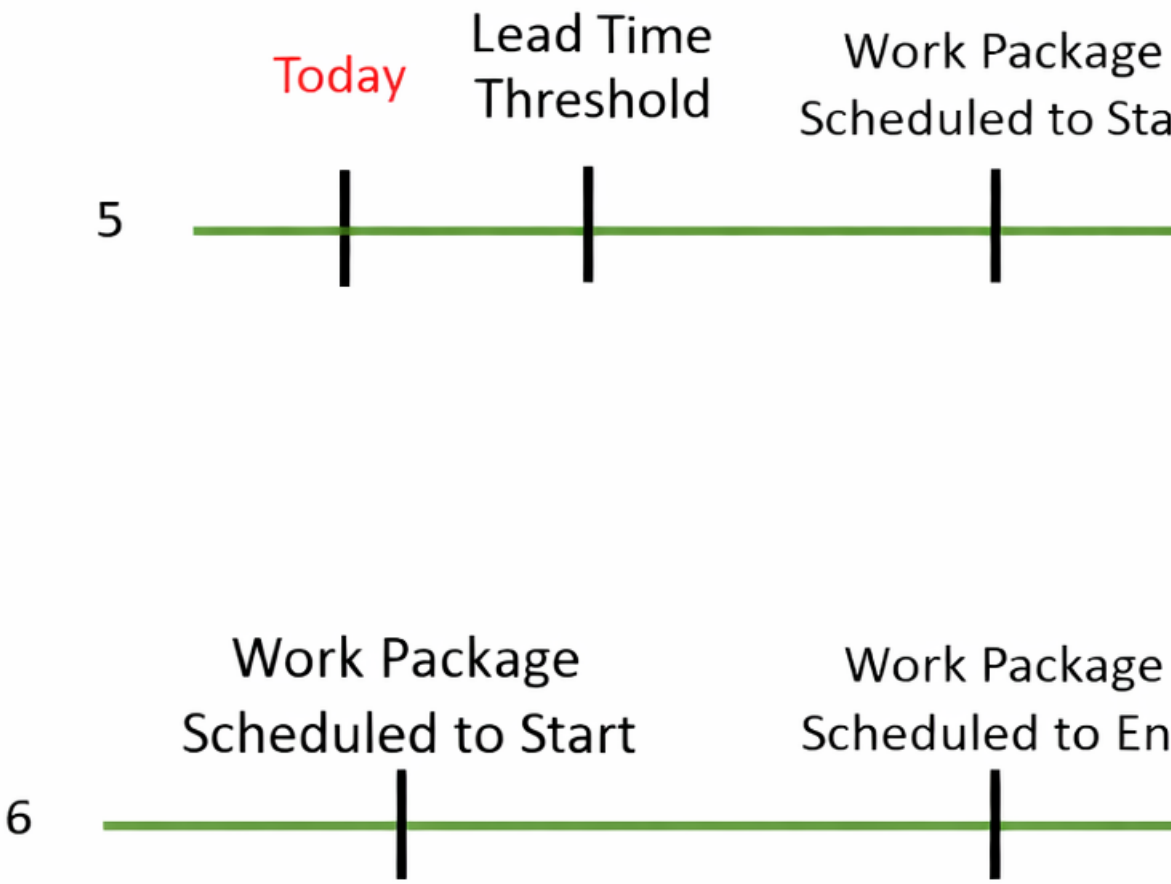

Scenario 5

The WP is started after the lead time threshold.

Scenario 6

Work package scheduled end date is before "Today".

> **Note** If a work package has not started and its schedule dates have shifted into the past, it will not be auto-published. Users must reschedule it within the auto-publish window to trigger the process

Run the background job for line and heavy work package auto-publish

To invoke the WC_API auto-publish feature, the user must run the relevant background job for the results to appear in the external maintenance execution system.

About this task

Once a work package is committed, run the background jobs shown below.

Steps

1. Go to **Administrator**, and navigate to **Jobs**
2. For a heavy work package, select `WCAPI_PUBLISH_HEAVY_WORK_PACKAGE`
3. For a line work package, select `WCAPI_PUBLISH_LINE_WORK_PACKAGE`
4. Click **Run Jobs**

The work package will be automatically published once the configured threshold conditions are met.

Complete Work Package

Having an equipment baseline that is aligned with an external maintenance execution system or Mobile Maintenance(MM) makes it possible for CAMO to update specific details of tools, parts, measurements in Work Packages thereby completing the Work Package in CAMO.

Once the aircraft is released through the maintenance execution system the Work Package will be completed. The tasks and faults owing to that Work Package are consequently closed off in CAMO.

Part Requests

Upon the completion of the work package, the part requirement is removed from the task and with it the request. In CAMO, the part request can be viewed through a part request search, but it will not be displayed in the Workscope.

Work Package Loader

If your repair station carries out maintenance work for a third party, you don't have to load their data manually. CAMO allows you to load this information using the Work Package Loader.

Add the information to the template, an Excel spreadsheet, and upload the data into CAMO. You can also make changes to the data using the Work Package Loader.

Work package loading and updating using a spreadsheet

To load work package data, you download the spreadsheet template, then you enter information about the project tasks into the spreadsheet. You then upload the data through the Manage Work Package page. When you load the spreadsheet data, CAMO creates the tasks and work package, for which you can then create a production plan. You can make changes to the work package by performing multiple spreadsheet uploads until the work package is started.

For each task, you can add either of the following in the spreadsheet:

Ad hoc tasks

- These tasks are not based on a template or requirement. Specify all information about the task, including the labor skills required and the number of hours needed for each skill. When loaded, CAMO creates the task and uses the spreadsheet data to determine the resource demand for the task.

  The ad hoc tasks you load have the certification required boolean enabled automatically for all labor requirements.

  Note The certification required value in the spreadsheet you upload will overwrite your organization's defaults.

Tasks based on requirements

- If your organization has task definitions defined in the Maintenix database you can specify the code of a requirement task definition.

  When loaded, CAMO creates the task and uses the data that is in the requirement task definition initializes the requirement definition. If the requirement task definition contains sub-task definitions, called job card definitions, CAMO also creates the sub-tasks based on the job card definitions.

Generate a work package spreadsheet by downloading the template that contains all the necessary columns to load the work package.

At anytime before a project starts, you can update the work package. To update the work package by using a spreadsheet, you load a spreadsheet that contains the changes. The changes you can make to the work package are the following:

- **Add**: New tasks can be added to a work package until the work package is in-work. To add new tasks, NEW is used in the action column. If the task already exists, an error will occur.
- **Cancel**: Tasks can be canceled from a work package until the work package is in-work. To cancel tasks, CANCEL is used in the action column. If the task does not exist, a warning will show. You can cancel in-work tasks on the Work Package Details page.
- **Edit**: You can edit Task Duration, Labor Skill, Hours for Skill, Certification Required, and Inspection Required through the work package loader. To edit a value, simply replace the old value with a new value. No action word is required. You must edit all other columns in CAMO.

Tip

To add and remove tasks from the workscope once the work has started, use the CAMO **Work Package Details** page.

Work package loading spreadsheet

The following table lists the columns that must exist in any spreadsheet you use for loading or updating the work package of a project, in the order in which the columns must occur. Also provided are descriptions of the values to set, the maximum length, and any other restrictions that apply.

Content of work package loading spreadsheet

Column name	Mandatory	Data type	Max. length in characters	Description
Action	Yes, when uploading new work package. No, when editing a work package.	Code	6	Specifies whether the task is new for the work package, or whether it must be removed from the work package. Select NEW when adding a new task. Set to CANCEL when canceling an existing task. Null value is acceptable when editing.

Column name	Mandatory	Data type	Max. length in characters	Description
Task Name	Yes, for ad hoc tasks	Free-form text	240	Name of the ad hoc task as it will appear in CAMO. When creating tasks from requirement definitions—which you must identify using their requirement code in another column described below—there is no need to enter a name in this column. The task will inherit its name from the task definition.
Description	No	Free-form text	4000	Description of the task as it will appear in CAMO. • You can add a task description to an ad hoc task when initially uploading the work package. • You cannot edit the task description on an existing work package using the Work Package Loader. You can add to the description on the Task Details page.
Unique Identifier	Yes	Free-form text	80	Identifier that is unique within the project and that is used to identify the task.
Config Slot	No			Configuration slot where the task will be performed. When provided, must match existing config slot on assembly. When null, defaults to root, determined by task definition.

Column name	Mandatory	Data type	Max. length in characters	Description
JIC Code	Auto-populated when applicable	Code		Leave this column blank. Not used when loading or updating the workscope.
Requirement Code	Yes to identify a task definition, otherwise No	Code	200	The code assigned to the requirement task definition. Leave blank for ad hoc tasks.
Task Subtype	No	Code	8	Identifies the type of task. In the production plan, PP&C uses this value when you assign tasks to phases automatically. Value must be a subclass code that exists in CAMO. Not used for tasks created from task definitions.
Zones	No	Comma delimited set		Comma delimited list of aircraft zones where the task is performed. In the production plan, PP&C uses this value when you assign tasks to work areas automatically. The zone code must match a zone code already defined in CAMO. Not used for tasks created from task definitions.
Panels	No	Comma delimited set		Comma delimited set of panels where the task is performed. Can only be added to ad hoc tasks.

Column name	Mandatory	Data type	Max. length in characters	Description
Task Duration (Hrs)	No	Decimal		The expected number of hours from the start of the task to the completion of the task. When not specified, zero is used. Not used for tasks created from requirement task definitions, only used for ad hoc tasks.
Instructions	No	Free-form text	4000	Any instructions associated with the ad hoc task can be entered here. These instructions appear in CAMO when the technician accesses the Task Details.
Labor Skill #<x>*	Yes**	Code	8	The code for the labor skill required on the task. The labor skill code must match a code that exists in CAMO. You can specify up to five different labor skills in a task. Do not specify labor skills or hours per skill for tasks you are creating using requirement task definitions in CAMO. You can use this column to edit skills on requirement task definitions.
Hours for Skill #<x>*	Yes**	Decimal		The expected number of hours required for the labor skill. Do not specify labor skills or hours per skill for tasks you are creating using requirement task definitions in CAMO.
Certification Required	No	YES or NO		If null, default is YES. When required, hours are set to zero.

Column name	Mandatory	Data type	Max. length in characters	Description
Inspection Required	No	YES or NO		If null, default is NO. When required, hours are set to zero.
Status	N/A	Code		Used by the system to report the results of the load. Do not specify a value.
System Comments	N/A	Text		Used by the system to report the results of the load. Do not specify a value.

Notes

*For both of these fields, replace <x> with an integer. You can have up to five labor skills, and hours for skill, per task; this means you can have columns called Labor Skill #1, Labor Skill #2, Labor Skill #3, Labor Skill #4, and Labor Skill #5. The same applies to the column(s) called Hours for Skill.

**You must specify at least one Labor Skill and one Hours for Skill value for each ad hoc task. You do not have to do so for tasks based on requirement task definitions.

Create work packages

Create a work package in CAMO by uploading a spreadsheet with all the task information.

Prerequisite

- The project aircraft exists in CAMO.

Steps

1. To open the **Work Package Loader**, do one of the following:
   - On your to-do list, click **Work Package Loader**.
   - Click the **Work Package Loader** menu item.
2. On the **Work Package Loader** page, click **Work Package Setup**.
3. In the **Work Package Setup** dialog box, provide the information requested, paying particular attention to the following mandatory fields:
   - **Aircraft Registration Code**: Select an aircraft tail number.
   - **Issue To Account**: Select the account to record time and material against.

> **Tip** Select a maintenance location and a start and end date for the work package even if you are not certain of what those values will be; you can move and reschedule the work package later if needed.

4. Click **Setup**.

   The **Manage Work Package** page opens, showing information of the work package you created. You load the workscope from this page.

> **Tip** At this point, if you provided incorrect information when creating the work package, you can delete the work package now—when it does not have a workscope—by clicking **Delete Work Package Setup**. You cannot delete the work package afterward.

What's next

Download the work package spreadsheet.

Download the work package spreadsheet

The work package spreadsheet has all the columns required to upload the work package into CAMO.

Prerequisite

- The work package for the project exists in CAMO.

About this task

You use the work package spreadsheet to load the work package into CAMO for the first time, and to update the work package at any time before starting it.

Steps

1. To open the **Work Package Loader**, do one of the following:
   - On your to-do list, click **Work Package Loader**.
   - Click the **Work Package Loader** menu item.
2. On the **Work Package Loader** page, click **Manage** next to your selected work package.
3. On the **Manage Work Package** page, click **Download**.
4. Open the downloaded spreadsheet. The file name is `workscope-<registration_code>-<work_package_name>.xls`.

Important To change the name of the spreadsheet, save it with the new name in the XLS file format (use Excel 97-2003 Workbook format).

What's next

Add tasks to the work package spreadsheet.

Add requirement-based tasks to the work package spreadsheet

Load requirement-based tasks using the Workscope Loader to quickly add task information to CAMO.

Prerequisite

- You have downloaded the project workscope spreadsheet.
- The work package for the project is not in-work or completed.

About this task

To load project workscope data, you enter information about the project tasks into a spreadsheet.

Steps

1. In Excel, open the work package spreadsheet.
2. On an empty row in the spreadsheet, provide values in the relevant columns. Pay particular attention to these mandatory columns:
   - **Action**: Enter `NEW`.
   - **Unique Identifier**: Enter an identifier of your choice, free-form text up to eight characters long, that is unique within the project and that is used to identify the task.
3. If a task definition exists for the task you are adding,
   - **Requirement Code**: Enter the code assigned to the requirement definition that exists in CAMO and that you want to use as the template to create this task. Only include Requirement Definitions in Active status.
4. Repeat these steps for all tasks to add to the work package.
5. Save your changes.

What's next

When you finish making changes to the spreadsheet, upload it to CAMO.

Add ad hoc tasks to the work package spreadsheet

Load ad hoc tasks using the work package loader to quickly add task information to CAMO.

Prerequisite

- You have downloaded the project workscope spreadsheet.
- The work package for the project is not in-work or completed.

Steps

1. In Excel, open the work package spreadsheet.
2. Do the following:
   - At a minimum, enter the task name, a unique identifier, one labor skill, and the expected number of hours required of that skill. To do so, set the following values:
     - **Task Name**: Enter the name of the ad hoc task.
     - **Unique Identifier**: Enter an identifier that is unique within the project. This value is used to identify the task.
     - **Labor Skill #1**: If a drop-down list of all skill codes is not available, then enter the required skill code in the Labor Skill #<x> field.
     - **Hours for Skill #1**: The expected number of hours required of the labor skill.
   - Optionally, specify the following information for the task:
     - **Config Slot**: Enter the configuration slot where the task work is completed.
     - **Task Subtype**: Enter the subtype code that exists in CAMO and that applies to the task. In the production plan, this value can be used to assign tasks to phases automatically.
     - **Zones**: Enter the code of the aircraft zone where the task is done. The zone code must already exist in CAMO. In the production plan, this value can be used to assign tasks to work areas automatically.
     - **Panels**: Enter the code of the panel to be opened for the task .
     - **Task Duration**: The expected number of hours from the start of the task to the completion of the task. When not specified, zero is used.
     - **Instructions**: Enter task instructions.
     - **Labor Skill #<2_to_5>** and **Hours for Skill #<2_to_5>**: Enter up to four additional labor skill codes that are required for the task, and the expected hours required for each skill.
     - **Certification Required**: Enter YES when certification is required for that task. The default value is YES.
     - **Inspection Required**: Enter YES when inspection is required for that task. The default value is NO.
3. Repeat these steps for all tasks to add to the work package.
4. Save your changes.

What's next

When you finish making changes to the spreadsheet, upload it to CAMO.

Related tasks

Upload the work package from a spreadsheet

Cancel tasks using the work package spreadsheet

Cancel the task in the spreadsheet and upload the spreadsheet to make changes to the work package.

Prerequisite

- You have downloaded the work package spreadsheet for the project.
- The work package for the project is not started.

Steps

1. Open the spreadsheet for the project in Excel.
2. Find the task to cancel.
3. Enter `CANCEL` in the **Action** column for the task.
4. Save your changes.

What's next

When you finish making changes to the spreadsheet, upload it to CAMO.

Related tasks

Upload the work package from a spreadsheet

Upload the work package from a spreadsheet

After preparing the work package spreadsheet, upload the spreadsheet to enter task information into CAMO.

Prerequisite

- The work package uploaded through the Work Package Loader exists in CAMO.
- The spreadsheet containing the task data has been created.
- If you identified task subclass, aircraft zones, and labor skills for tasks in the spreadsheet, these values exist in the Maintenix database.

Steps

1. To open the **Work Package Loader**, do one of the following:
   - On your to-do list, click **Work Package Loader**.

- Click the **Work Package Loader** menu item.

2. On the **Work Package Loader** page, click **Manage**.
3. On the **Manage Work Package** page, click **Upload** and choose the file to upload. Click **Upload**.

   The progress indicator displays the number of tasks loaded from the spreadsheet. When the process completes, you see a success message.

   CAUTION You can only load one spreadsheet at a time. When uploading a new spreadsheet, do not close the window, click the browser's Back button, or attempt to load another spreadsheet in another window. Doing so might lead to errors. Wait for the progress indicator to report the load is complete.

   Trouble? If there are errors, part of the progress indicator is red. Click **View Errors**. This downloads a spreadsheet that contains all the data you tried to load, and error messages for the tasks with bad data. Open this spreadsheet and consult the **Status** and **System Comments** columns to identify the errors, and why they occurred.

The Work Package Loader commits to the database only when all records in the spreadsheet have been successfully validated.

Edit task details

Edit task information in the work package spreadsheet to edit the task information in CAMO.

Prerequisite

- You have downloaded the work package spreadsheet for the project.

Steps

1. Open the spreadsheet for the project in Excel.
2. Find the task to edit.
3. Change the value in the relevant columns.
4. Save your changes.

What's next

When you finish making changes to the spreadsheet, upload it to CAMO.

Related tasks

Upload the work package from a spreadsheet

Scheduling and rescheduling work packages

Scheduling a work package, for aircraft or component maintenance, means choosing a start date, the end date, and the location where the work will be done. You can schedule work packages to your organization's internal maintenance locations, or to an external vendor location when you outsource the work to an MRO.

You cannot commit the workscope or start a work package until you schedule the work package. You can schedule a work package at any time after the work package has been created, even if you have not yet finished defining the workscope.

After a work package is scheduled, you can change the start date, and move the work package to another, more suitable location. Also, you can update the end date of a work package, for example, when capacity issues mean that the work will be completed later than originally thought.

For aircraft maintenance visits done in your organization, you might have to move the aircraft to different internal locations while the work package is in project, for example, towing the aircraft to a location that is equipped to paint it. To indicate the correct location of the aircraft in CAMO, you reschedule the in progress work package; if CAMO is configured to do so, rescheduling the work package updates the location of the aircraft and ensures that parts requested for the visit are sent to the correct location.

Global material request status for a single task or fault

When planning and scheduling the start date of tasks or faults, you can review the global material availability status of part requests for the task or fault. The global status indicates whether all of the parts required to complete the task, or fault, and its subtasks are available.

If some of the parts are not available, but the date when the last part request will be fulfilled is known, the Material Availability column shows the ETA date. This helps you to identify tasks that are ready to start, and to schedule those that will be ready at a known date, without having to look at the status of the individual part requests within each task. You can also use the global status to follow up on unfulfilled requests.

You see the Material Availability column the Work Package Details page (Assigned Tasks, Unassigned, and Workscope tabs) and on the Inventory Details page (Open Tasks and Open Faults sub-tabs). You can verify whether the parts required to complete the tasks in a work package are available, and if they are not, when they are expected to be available.

If Material Controllers manually update the ETA on a part request, this information is updated on pages that display the ETA date in the Material Availability column.

If there is no ETA date, then you see one of the following statuses:

Global material request status for a single task or fault

Global material request status	Description
OPEN	For this task or fault, at least one part request is open.
ON ORDER	For this task or fault, for at least one part request, inventory is ordered, but the ETA date is unknown.
N/A	For this task or fault, the material availability status is not applicable because there are no part requests, or because all part requests were fulfilled.

Review part availability

The Material Availability column shows the global status of the part requests for tasks.You can verify whether the parts required to complete the tasks in a work package are available, and if they are not, when they are expected to be available.

Steps

1. Find the work package.
2. On the **Work Package Details** page, do one of the following:
   - To see the availability of parts for the tasks currently in a work package, click the **Assigned Tasks** tab.
   - To see the availability of parts for tasks or faults associated with an aircraft and that are not assigned to any work package—for example, if you have extra capacity and are looking for additional work that can be completed during this work package—click the **Unassigned** tab, and then click either the **Unassigned Faults** or **Unassigned Tasks** sub-tab.

Related tasks

Find a work package

Schedule work packages to internal maintenance locations

When you schedule a work package, you select the specific maintenance location where the work will be done, and the start date of the work.

About this task

When a work package is first scheduled, CAMO assigns it a unique work package number, which is often used for reference purposes in other systems that your organization has integrated with CAMO, such as an external maintenance system in which you track maintenance execution.

Steps

1. Find the work package.
2. On the **Work Package Details** page, click **Schedule Work Package**.
3. On the **Schedule Work Package** page, provide the required information. Note the following:
   - **Collection Required**: Select this option if you want a supervisor to flag all job cards in CAMO that are collected on paper when the work is done.
   - **Scheduled Location**: Click **Select Location** to select the maintenance location where the work package will be done.
   - **Scheduled Start/End**: Select the date and time when the work package is scheduled to begin and end.
4. Click **OK**.

Related tasks

Find a work package

Schedule work packages to external vendors

For maintenance that you outsource to external vendors, you schedule the work package in CAMO to select the vendor and the start date of the work.

Steps

1. Find the work package.
2. On the **Work Package Details** page, click **Schedule Work Package**.
3. On the **Schedule Work Package** page, select **Work done by an external vendor**.
4. In the remaining areas of the page, provide the required information. Note the following:
   - **Collection Required**: Select this option if you want a supervisor to flag all job cards in CAMO that are collected on paper when the work is done.
   - **Work Location**: Click **Select Location** to select the location where the work package will be done. You can automatically issue inventory for part requests if you select a Vendor Line or Vendor Track location with auto-issue enabled as the Work Location.
   - **Repair Vendor**: Click **Select Repair Vendor** to select the repair vendor who will do the work.
   - **Vendor work Package No**: If the vendor provided you with a work package number they use to track the order, enter that number.
   - **Repair Unit Price**: Enter the agreed upon price for the work.
   - **Scheduled Start/End**: Select the date and time when the work package is scheduled to begin and end.
   - **Charge to Account**: Select the account to be billed for this work package.
5. Click **OK**.

At the top of the **Work Package Details** page, the **RO Number** appears. You can click it to see the details of the repair order.

What's next

If the work package is for a component rather than an aircraft, get the repair order authorized and issued. Issuing the repair order automatically creates an outbound shipment for the inventory so you can ship it to the repair vendor. When a storeroom clerk sends that shipment, the component work package in CAMO is automatically started.

Related tasks

Find a work package

Reschedule work packages

You reschedule a work package to change its start date or the location where the work is being done.

About this task

When you reschedule a work package for which part requests already exist, CAMO updates the part requests with the correct location and date on which the parts are needed. Task locations are also updated either to the new work package location or for component work packages, task locations are updated to locations that are assigned the capability to perform the task work type.

You can reschedule a work package before it is started to change the start date, to select a different maintenance location or repair vendor, or to schedule a work package that was scheduled internally to an external vendor (or vice versa). For work packages that are in progress at internal locations, you can reschedule to indicate that the aircraft has been moved to a different hangar or track; if CAMO is configured to do so, rescheduling a work package updates the location of the aircraft in the system, and in the part requests being fulfilled.

Steps

1. Find the work package.
2. On the **Work Package Details** page, click **Schedule Work Package**.
3. On the **Schedule Work Package** page, select whether the work package will be done internally or by an external vendor.
4. Based on your selection in the previous step, provide the required information. Note the following:
   - **Collection Required**: Select this option if you want a supervisor to flag all job cards in CAMO that are collected on paper when the work is done.
   - **Scheduled Location** or **Work Location**: Click to select the maintenance location where the work package will be done. For work packages scheduled to external vendors, you must also select the **Repair Vendor**.

- **Scheduled Start/End**: Select the date and time when the work package is scheduled to begin and end.

5. Click **OK**.

Related tasks

Find a work package

Update location when aircraft is moved during in-progress work package

When you move an aircraft that is undergoing maintenance at internal maintenance locations from one location to another—for example, to access specialized equipment—you reschedule the work package in CAMO to the correct location. This updates both the work package, so that it accurately shows where work is currently being done and, provided CAMO is configured to do so, the inventory record for the aircraft.

About this task

Rescheduling the work packages also updates the location where parts are required on pending part requests, and ensures that parts are sent where the aircraft is located.

Steps

1. Find the work package.
2. On the **Work Package Details** page, click **Schedule Work Package**.
3. On the **Schedule Work Package** page, provide the required information. Note the following:
   - **Scheduled Location**: Click **Select Location** to select the maintenance location where the aircraft is being moved to.
4. Click **OK**.

Related tasks

Find a work package

Change the end date of a work package

You can change the estimated end date of a scheduled work package if you think that it will take more or less time to complete.

Steps

1. Find the work package.
2. On the **Work Package Details** page, click **Edit Estimated End Date**.
3. On the **Edit Estimated End Date** page, do the following:
   - Type a new estimated end date, or click to select the date from the calendar.
   - Select a reason for the delay.

- Click **OK**.

4. If prompted, type your password, and click **OK**.

Related tasks

Find a work package

Delay the end date of a visit

Prerequisite

- The work package is in work.

About this task

When you become aware that a maintenance visit will take longer to complete than planned—for example, because some parts or tools are not available—you update the estimated end date of the work package in CAMO, so that other users see the updated date on CAMO pages.

Steps

1. Find the work package.
2. On the **Work Package Details** page, click **Delay Work Package**.
3. On the **Delay Work Package** page, do the following:
   - Enter a new estimated end date.
   - Select a reason for the delay.
   - Click **OK**.
4. If prompted, enter your password, and then click **OK**.

Related tasks

Find a work package

Generate the workscope of a work package

At any time while you are packaging tasks, you can generate the workscope. This adds the Workscope tab to the Work Package Details page, generates the open and close job cards for aircraft panels (if your organization uses master panel card task definitions), and suppresses duplicate job cards from the workscope.

Prerequisite

- The work package is scheduled.

Steps

1. Find the work package.

2. On the **Work Package Details** page, click **Generate Workscope**. If you see the **Clear Workscope** button instead of the **Generate Workscope** button, the workscope of the work package has already been generated. You can clear the workscope and generate it again.

   The **Workscope** tab is added to the **Work Package Details** page; it lists all executable tasks included in the work package, and assigns a line number to each of the tasks.

Related tasks

Find a work package

Duplicate job card suppression

To avoid issuing duplicate tasks to technicians, CAMO automatically suppresses most duplicate job cards.

Within a work package, it is possible to have multiple job cards that are based on the same task definition. However, during the execution of this work package, the work specified by the job card has to be performed only once. For example, a job card explaining how to perform some preliminary work (like removing a part to be able to access another component), should only be executed once for all of the requirements (other than follow-on requirements) in the work package.

A duplicate job card is one that is based on the same revision of the same job card definition as another job card in the work package, that pertains to the same inventory. This means that the job card definitions have the same code, and they are associated with the same configuration slot.CAMO automatically suppresses duplicate job cards for all requirements except follow-on requirements and replacement (REPL) class requirements. Your administrator can configure this feature:

- Duplicate job card suppression can be disabled.
- Duplicate job card suppression can be enabled for more complex replacement task workflows in which multiple replacement tasks (REPL class requirements) in the same work package share a common job card.

CAMO suppresses duplicate job cards by doing the following:

- Detects whether the workscope contains more than one job card based on the same revision of the same job card definition.
- When there are duplicates, CAMO marks one of the duplicates as the to-be-executed job card, and suppresses the others by making them view-only copies. However, duplicate job cards based on follow-on requirements are not suppressed.
- Cancels the part requests that exist for the suppressed duplicate job cards.
- Adds a reference to each suppressed job card that identifies the to-be-executed job card. If you try to open the Task Details page of a suppressed job card, CAMO opens the task details of the to-be executed job card. This ensures that the modifications users make to the task are applied to the one task that is in the workscope.

Tip On the Work Package Details page, the Assigned Tasks tab shows all tasks in the work package—job cards underneath their parent requirement—which includes duplicate job cards, if any. However, on the Workscope tab, only one occurrence of the job card is listed; the suppressed duplicate job card is not listed. The Duplicate column on the Workscope tab indicates which job cards have suppressed duplicates.

CAMO suppresses duplicate job cards at the following events:

- When you generate the workscope of a work package.
- When you commit a work package.
- When you assign tasks to a committed work package.
- When a block is initialized; if the block contains duplicate subtasks, all but one are suppressed; therefore, no part requests are created for these suppressed job cards.

Note Duplicate job cards in a work package are only suppressed if the matching job card in the work package has not been executed. A duplicate job card remains in the work package if the original was already completed when the duplicate was added to the work package.

For example, when Block 1—shown in the following diagram—is initialized, one of the JIC1 instances is automatically suppressed. Part requests are not created for this job card. Block 1 is then assigned to work package Check 1, and Req 3 is also assigned to Check 1. In addition, a follow-on requirement called FReq 4 is also assigned to Check 1. When the workscope is generated, JIC1 and JIC2 are suppressed for Req2 and Req3, and their part requests are canceled. However, JIC1 and JIC2 are not suppressed for FolReq4.

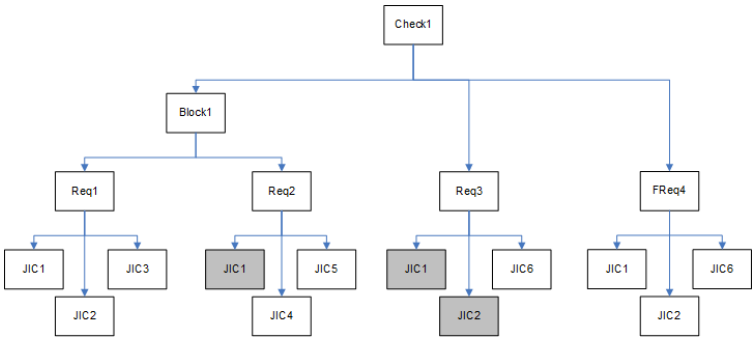

Duplicate job card example

CAMO reviews the job cards that were suppressed whenever you remove tasks from a committed work package, and when you add or remove part requirements from the to-be-executed job card that remains in the workscope. It also updates the information on the suppressed job cards when maintenance personnel complete the to-be-executed task in the work package. The following subsections provide details about these situations.

Duplicate tasks initiated from executable requirements

When duplicate suppression is enabled for job cards, some organizations configure CAMO to exclude executable requirements from the task suppression logic. Most organizations want to suppress duplicate job cards when work packages are committed or started, but for compliance reasons, duplicate tasks created from executable requirements for the same component might be allowed. For example, multiple faults on the same component might have the same corrective subtask. Note that if duplicates are suppressed for job cards and executable requirements, duplicates of tasks with the FOLLOW task class are not suppressed. For configuration information, see the *CAMO Administration Guide*.

Completing job card that has suppressed duplicates

When a technician completes the to-be-executed job card, for which duplicates were suppressed, CAMO does the following in each suppressed job card:

- Copies the information entered by the technician—for example, the completion date—from the completed task to the suppressed duplicate.
- Removes the Labor History row.
- Sets each labor row to COMPLETE.
- Replaces part request with the part request of the to-be-executed job card.
- Replaces removed and installed part values with the removed and installed part values of the to-be-executed job card.
- Auto-completes that parent requirement, when this is the last subtask to be completed for in a requirement.

Removing tasks and job card suppression

When you remove a task from a committed workscope, CAMO verifies whether the task—or, in the case of a requirement, any of its subtasks—are the to-be-executed job card that is referenced in suppressed job cards, or are themselves suppressed job cards.

Verifying to-be-executed job cards are removed

If there are no to-be-executed job cards in the task you are removing, CAMO removes the task and its subtasks from the work package. The task is crossed out and greyed out, but it remains on the Workscope tab.

If the task you are removing, or any of its subtasks, is a to-be-executed job card that is referenced in suppressed job cards, CAMO:

- Promotes one of the suppressed job cards to be the new to-be-executed job card, which suppresses the others.

- Changes the reference on every other duplicate job card, to point to the promoted job card as the to-be-executed job card.
- Unlocks the part reservations for the task that is being unassigned, so that reserved parts can be assigned to other part requests.
- Generates required part requests for the promoted job card.

Verifying suppressed job cards are removed

If the task you are removing from the committed work package is, or contains, a suppressed job card, CAMO deletes the reference to the to-be-executed job card and, because the task is now unassigned, CAMO recreates the part requests for the removed task.

If the to-be-executed job card has already been completed, the suppressed job card also has the status of Complete. However, the job card that was suppressed is now unassigned, and might have to be executed again when its parent task is added to a new work package. Therefore, CAMO creates a new active copy of the completed job card in the removed parent task. For example, if you have:

- REQ A
  - JIC A (COMPLETE because the referenced to-be-executed was completed)
  - JIC B (ACTIVE)

When the requirement is removed from the work package, it is as follows:

- REQ A
  - JIC A (COMPLETE)
  - JIC A (ACTIVE)
  - JIC B (ACTIVE)

As a result, after the task has been unassigned, the list of active job cards in the requirement is the same as the list of job card task definitions in the baseline. You can configure CAMO to simply move the completed suppressed job card instead of creating an active copy of it. Contact your CAMO administrator.

Reserve and request all parts for a work package

Prerequisite

- The work package is scheduled to a maintenance location and has a start date specified.

About this task

Perform the following steps to request the parts needed to complete a work package before you commit the workscope of the work package. Doing so starts the auto-reservation process for the part requests for all tasks in the work package; also, any part request that cannot be fulfilled with the stock currently on hand is displayed on the to-do list of material management personnel. Committing the workscope of the work package has the same outcome as the following steps.

Steps

1. On the **Work Package Details** page, click **Request Parts**.
2. Optionally, on the **Request Parts** page, enter a note.
3. If prompted, enter your password and click **OK**.

Search for inventory

About this task

Viewing available inventory

You can view all the inventory that is available to be reserved for parts that need to be changed on a task or fault.

Search type	Part searched for	Details to be entered
Applicability to aircraft	TRK	Tail Number, Configuration Slot Position, Supply Location
Serial number	TRK, SER, BATCH, SUB ASSY, KIT	Field Serial No/ Batch No
Part number	TRK, SER, BATCH, SUB ASSY, KIT	Part Group
Configuration slot	TRK, and SUB ASSY	Select the Assembly from the Search Type drop down, Configuration Slot position

Viewing all inventory

You can view the complete list of inventory regardless of it's availability to be reserved.

Search type	Part searched for	Details to be entered
Aircraft	Return all the inventory including the attached and reserved for the aircraft.	Search and select the Aircraft, Configuration Slot Position
Owner	Returns all inventory owned by that specific organization, installed, and uninstalled.	Owner code
Quarantine	Returns all inventory that is quarantined and cannot be reserved for a task.	-

Follow the steps below to find and reserve your inventory

Steps

1. Go to the **Inventory Search by Type** page.
2. On the Search Type drop down, select your Search type.
3. Enter the details required on the page.

4. Click **Search.**

Review part requests and tool requirements in work packages

You can review whether the parts required for a task or the entire work package are available, have been requested, and what their estimated arrival date. Also, you can see the tools requirements that exist in the work package, and whether specific tools are available or have been checked out to technicians.

Steps

1. Find the work package.
2. On the **Work Package Details** page, click the **Parts** tab. The **Parts** tab lists all the tasks in the work package that have part requirements. For each task, all part requirements in the task are shown. For each part requirement, the list shows the part request ID number, the current status of the request, the estimated time of arrival (ETA) of the inventory, and the quantity available. Above the table are filtering options you can select to show only the part requirements and requests for complete tasks, or only those that are open, unfulfilled. You can click the part request ID to go to the Part Request Details page. You can reference the request ID to the material management personnel when you want to expedite a request or get information as to when it will be fulfilled.
3. On the **Work Package Details** page, click the **Tools** tab. The Tools tab lists all the tasks in the work package that have tool requirements. The line number is the line number of the task on the Workscope tab of the work package. For each tool requirement, the list shows the tool description, whether a tool was checked out and if so to whom, the number of hours for which the tool is needed, and how many of the tools are available. Above the table are filtering options you can select to show only the tool requirements for complete tasks, or only those for which tools are not available.

Related tasks

Find a work package

Change the priority of a part request

To indicate that parts are required more urgently or less urgently, you can change the priority of a part request.

Steps

1. Do one of the following:
   - Go to the **Work Package Details** page, **Parts** tab.
   - Do a **Part Request Search** and enter your search criteria.
2. Click the **Request ID** link.
3. On the **Part Request Details**, click **Edit Request Priority**.

4. From the **Priority** list, select the priority you want.

Your change is recorded on the Part Request Details page, History tab.

Related concepts

Part requests

Request tools

As you work on a task, you might need to request tools that were not specified as requirements in the task. To request tools for a task that is in work, or soon to be in work, you can add one or more tool requirements to the task. Also, you can select specific tool inventory items and assign them to the tool requirements. You can do these two steps together using the Barcode Add Tool Requirement button.

Prerequisite

- The task is active or in work.

Steps

1. Do one of the following:
   - In the **Barcode Search** field, scan or enter the barcode of the task, and press Enter.
   - On the **Task Search** page, enter your search criteria, and click **Search**.
   - On your to-do list, **My Tasks** tab, select the check box of the task.
2. To add a tool requirement to a task or fault using the **Barcode Add Tool Requirement** button:
   a) Go to the **Task Details** or **Fault Details** page, **Task Execution** tab, **Tool Requirements** area, and click **Barcode Add Tool Requirement**.
   b) On the **Barcode Add Tool Requirement** page, in the **Barcode** field, scan or enter the barcode of the tool and click **Search**.
   c) Select the tool.
   d) (Optional) In the **Sched. Hours** column, enter the number of hours the tool will be used.
   e) Click **Assign Selected Tools to Task**.
   The barcode inventory is assigned to the newly created tool requirement.
3. To add a tool requirement to a task or fault using the part group or part number:
   a) Go to the **Task Details** or **Fault Details** page, **Task Execution** tab, **Tool Requirements** area, and click **Add Tool Requirement** ⊞.
   b) On the **Add Tool Requirement** page, enter your search criteria and click **Search**.
   c) From the search results, select one or more tools.
   d) (Optional) In the **Sched. Hours** column, enter the number of hours the tool will be used.
   e) Click **Assign Selected Tools to Task**.
   The tool requirement is added.

f) To assign tool inventory to a tool requirement, on the **Task Details** or **Fault Details** page, click the **Task Execution** tab.

g) In the **Tool Requirements** area, select the tool requirement check box, and then click **Assign Tool** .

h) On the **Inventory Search** page, find the tool to assign by doing one or more of the following:

- Enter the barcode of the tool to assign.
- Click **Search** to find all tools for the selected tool part number.
- Restrict or refine the search criteria, for example, by selecting a location or selecting to include tools that are issued in the search, and then click **Search**.

> **Note** You can assign only tools whose inventory condition is ready for issue (RFI).

i) In the **Inventory Found** list, select the tool, and click **Assign Inventory**.
The serial number of the tool is shown in the **Tool Requirements** area of the **Task Execution** tab.

Rob parts

About this task

You can take a part from one aircraft to use on another that has a more urgent repair need. This is called robbing a part. To do this, you must:

- Raise a fault against the aircraft that is being robbed, and request a replacement part.
- Remove the part from the aircraft being robbed, and record the work completed.
- Cancel the original part request for the aircraft needing repair.
- Install the robbed part on the aircraft requiring repair, and record the work completed.
- Install a new part on the aircraft that was robbed, and record the work completed.

Raising a fault and requesting parts immediately grounds the aircraft until the task is completed or deferred.

Steps

1. On your to-do list, **Fleet List** tab, select an aircraft, and click **Raise Logbook Fault**.
2. On the **Raise Logbook Fault** page, **What to do** area, select **Log fault and request part immediately**.
3. In the Fault Registration area, do one of the following:
   - To use a fault definition, click **Select Fault Definition** .
   - To create an ad hoc fault, provide the information requested in the available fields.
4. On the **Raise Logbook Fault** page, click OK.

5. If this is potentially a recurring fault and the **Recurrence Of** field is empty, the Find Recurring Fault page opens. Select a fault that the current fault is a recurrence of or select N/A if not applicable, and click OK.
6. On the **Fault Details** page, **Task Execution** tab, **Part Requirements** area, click **Add Part Requirement** .
7. On the **Add Part Requirement** page, enter your search criteria, and click **Search**.
8. From the search results, select a part, and edit the available fields as required.
9. Click **Assign Selected Parts to Task**.
10. To record work completed for a task, on the **Details** page, **Task Execution** tab, **Labor** area, in the labor row, do one of the following:
    - If you have not completed the task, but are stopping work for the day, click **Job Stop**.
    - If you have completed the task, click **Finish**.
11. If prompted, enter your password and click OK.
12. On the **Work Capture** page, provide the requested information and click OK.
13. To find a part request, on the **Part Request Search** page, enter your search criteria, and click **Search**.
14. To cancel a part request, on the **Part Request Details** page, click **Cancel Part Request**.
15. On the **Cancel Part Request** page, provide the requested information, and click OK.
16. If prompted, enter your password, and click OK.

Commit the workscope of a work package

After the workscope is defined, you commit the workscope. This triggers auto-reservation for open part requests.

Prerequisite

The work package must be scheduled before you can commit the workscope.

Steps

1. Go to the **Work Package Details** page.
2. Click **Commit Scope**.
3. If prompted, enter your password and click **OK**.

   The status of the work package changes from Active to Commit. If you did not generate the workscope before committing, the Workscope tab is added to the **Work Package Details** page. On the **Workscope** tab, a thick line appears below the last task, indicating the commit point. Any task you add after committing appears below this line.

Tip If you do not start the work package, you can click the Uncommit Scope button to undo the commit operation. Undoing the commit operation removes the date and location from part requests, and cancels any part reservation created manually or automatically.

You can still make adjustments to the workscope after committing the work package, but the implications are significant.

Changing a committed workscope

Modifying the workscope after a work package has been committed has far-reaching implications of which maintenance planners, production controllers, and maintenance supervisors should be aware of.

Modifying the workscope after the commit point affects material reservation. It can also change the end date of a work package and, if the workscope is increased significantly, produce a shortage of resources such as skilled labor and tools.

When you add tasks to a committed work package, the following occurs:

- The executable tasks that you added are listed on the Workscope tab, below the thick line that indicates the point at which the work package was committed.
- Part requests for the added tasks go into the auto-reservation queue, and CAMO attempts to find and reserve inventory to fulfill them.
- Requests that cannot be fulfilled with available inventory appear on the to-do lists of material management personnel, who are responsible for procuring the required parts.
- If there are duplicate job cards in the tasks you added, CAMO suppresses the duplicates and cancels part requests that exist for them.
- If the deadline of a task you added is earlier than all other tasks that were already in the work package, the new task becomes the driving task, and the due date of the work package changes to the deadline of that task.
- If the maintenance location where the work package is scheduled does not have the required parts, tools, or labor skills available to perform the new tasks, the completion of the work package is delayed.

When you remove tasks from a committed work package, the following occurs:

- The executable tasks that you removed remain on the Workscope tab, but appear crossed-out and in gray.
- If inventory was reserved for the part requests of the tasks you removed, the reservations are broken, the reserved inventory items become available again, and the part requests are re-opened for the task, which is now an unassigned task.

- The Needed By date of the open part requests for the tasks you remove is updated to the due date of the tasks instead of the due date of the work package, and the location information is deleted from the part requests.
- If the tasks you removed included duplicate job cards that were suppressed, the duplicates are reinstated in the now unassigned task, and new part requests are created for these tasks.
- If any of the tasks you removed requires that specific panels be opened, and the task is associated with open and close panel job card tasks (tasks generated from task definitions that have the OPENPANEL and CLOSEPANEL task class), the following occurs:
  - If the open task was not started—it still has the active status—both the open and close job card tasks are removed from the work package because they are no longer needed.
  - If the open panel task was started, is paused, or was completed, the open and close panel tasks only remain in the work package if any panels were opened on the task that's being signed off.
  - If a master panel card task includes panels from many different tasks (which is often the case), and you unassign one of those tasks from the work package, then the panels from the task you unassigned are removed from the master panel card open and close tasks.

When you assign at task to or remove a task from a committed workscope, you must authorize the action, and you can add a note explaining the reason for the change. Depending on the configuration of CAMO, you might also have to enter your password.

Related concepts

Master panel card definitions

Cancel work packages

About this task

Canceling a work package quickly cancels all tasks included in the work package. You can cancel work packages any time before they are started. If you receive the project workscope from a connected operator who uses CAMO as well, you cannot cancel the work package associated with that workscope; only the operator can cancel the work package.

Steps

1. Go to the **Work Package Details** page by doing one of the following:
   - In the **Barcode Search** field, enter the work package barcode and press **Enter**.
   - On your to-do list, **Fleet List** tab, click the aircraft of the work package. On the **Inventory Details** page, **Open** tab > **Open Work Packages** tab, click the work package name or ID.
2. On the **Work Package Details** page, click **Cancel Work Package**.

Trouble? If you do not see the **Cancel Work Package** button, the work package you selected cannot be canceled because 1) the work package is currently in work, or 2) the workscope for the work package was received from a connector operator who uses CAMO.

3. When prompted to confirm, click **Yes**. The work package has the CANCEL status value. All tasks associated with the work package are canceled.

Assign a work package to line crews

From the Work Package Details page, line supervisors can quickly assign one or more crews to a work package.

Steps

1. On the **Work Package Details** page, click **Assign Crew**.

   The **Assign Crew** page opens, displaying the following information:

   - **Work Package Information**: Displays the aircraft, work package name, work package number, and the location of the work package.
   - **Total Task Hours**: The sum of the Work Performed Scheduled Hours for all active labor rows.
   - **Show Crew Details for the next Hours**: To view upcoming crew availability, enter the number of hours to view and click **Search**.
   - **Select a Crew**: Select the crew to assign from the list.

2. Select the crew(s) to which you want to assign the tasks and click **OK**.

   The tasks are assigned to the crew, the **Assign Crew** page closes, and you return to the **Work Package Details** page. The tasks from the assigned work package will appear on your **Assigned to Your Crew** tab.

Start work packages

Starting a work package starts the maintenance visit. When a work package is started, its status changes to In Work, and it appears on the technicians' Assigned to You and Assigned to Your Crew pages, and tasks and faults within the work package can be started.

About this task

> **Note** You do not start component work packages that are scheduled to external repair vendors; they are started automatically when the inventory is shipped to the repair vendor.

Steps

1. Find the work package.
2. On the **Work Package Details** page, click **Start Work Package**.

Note You can start a work package with a start date that is in the past. See related topic.

3. On the **Start Work Package** page, click next to **Actual Start Date** to select the actual start date.

Note The above procedure does not allow you to update usage. To view or edit the current usage, use the **Start Work Package and Edit Usage** button.

The CHECK_SCHEDULED_TIME_AS_DEFAULT configuration parameter allows you to control the Actual Start Date value when you click the Start Work Package button. If it is set to:

- TRUE, when the user clicks on the Start Work Package button, the Actual Start Date will be defaulted to the Scheduled Start Date of the work package.
- FALSE, when the user clicks on the Start Work Package button, the Actual Start Date will be defaulted to the System Time.

Related tasks

Find a work package

Record a work package that occurred in the past

Job card collection

Technicians record their work on printed job cards that get collected and entered into CAMO by technical records personnel.

In CAMO, the Collection Required checkbox is an option that applies to visits during which technicians fill out paper job cards, and put them in a bin for collection by a supervisor who ensures that no job is lost.

When this option is enabled, you are able to see additional controls on the Work Package Details page, Workscope tab. These controls allow supervisors to mark the job cards that are collected correctly, unmark those that are erroneously collected, filter the workscope to see only the collected or not collected job cards, and see the total number of job cards and how many have been collected.

Previewing releases

While a work package is in progress and when completing work packages, you go to the Preview Release page to see errors and warnings for an aircraft or component. These errors and warnings

might prevent release to service for an aircraft or component, or in the case of batch completion errors, might prevent work package completion.

At any time during execution of a work package you can preview a release to get advance warnings of potential problems and to deal with them before you try to complete a work package. When you complete a work package, resolving errors on the Preview Release page is required before you can continue to the Complete Work Package page.

The Preview Release page displays the following information:

Preview Release page information

Area	Description
Summary	The number of errors and warnings for: • Batch completion errors in this work package. • AOG faults against the inventory outside of this work package. • Overdue, open tasks and faults that aren't in this work package. • Open tasks that aren't in this work package and that are approaching their due date (default value of five days is configurable). • Missing mandatory components.
Batch Completion Errors	List of tasks that were not completed in batch complete processing for this work package. Description of the error that prevented batch completion of the task. From this page, you can link to tasks and provide the missing information.
Faults	Open faults (not assigned to this work package) for the inventory or any of its sub-components. From this page, you can assign faults to the work package.
Tasks	Open tasks for the inventory that aren't in this work package. In the Due column, tasks that are red color have exceeded deadlines. For component work packages in which Next Shop Visit tasks (NSV) are enforced, this includes any NSV task that applies to the component and that is overdue or that does not have a deadline. From this page, you can assign tasks to the work package.

Area	Description
Uncollected Job Cards	Missing job cards for this work package. This area is displayed if the Collection Required check box (for job cards) is selected for the work package.
Missing Components	Missing, mandatory components for the inventory. For example, a part was removed and a replacement was not installed. From this page, you can create an installation task for the missing component and you can assign an installation task and fault to the work package.

Related concepts

Completing work packages

Related tasks

Preview a release

Preview a release

You can preview a release to see a summary of errors and warnings that might prevent release to service of an aircraft or component or that might prevent the work package from being completed. You can see open, approaching due, and overdue tasks and faults against the inventory that aren't in the work package, missing mandatory components, and missing job cards.

About this task

The following steps are for previewing aircraft release, but from a component work package, you can also preview the release from maintenance.

Steps

1. On your to-do list, click the **Fleet List** tab.
2. In the **Aircraft** column, click the aircraft.
3. Click the **Open** tab, and then click the **Open Work Packages** tab.
4. In the **Work Package** column, click a work package.
5. Click **Preview Release**.

Related concepts

Previewing releases

Evaluate aircraft completeness

You might want to manually trigger an evaluation of aircraft completeness if all applicable configuration slots are filled, but the aircraft is not marked as complete. This is not a task that you typically do, but it can be helpful if you are troubleshooting issues related to completeness when attempting to release an aircraft.

About this task

Typically when a transaction occurs that could change whether a component is marked as complete, CAMO automatically evaluates impacted inventory and sub-components for completeness. If the aircraft is complete, you see the Complete check box is selected on the Inventory Details page, Sub Inventory tab. If the check box for the aircraft is not selected when you expect it should be selected, try manually triggering a completeness evaluation to resolve the problem. This task only applies to aircraft inventory.

Steps

1. Go to the aircraft's **Inventory Details** page.
2. Click **Evaluate Completeness**.

Aircraft capabilities

Aircraft capabilities are a tool for summarizing the types of flights and services an aircraft is able to perform at the present time. Engineers configure aircraft capabilities, but maintenance controllers revise the current capabilities when required. For example, after deferring a fault, you reduce an aircraft's current ETOPS capability level.

To report an aircraft's capability, you must consider both its configured capability (what capability the aircraft has been built to embody), and what its current operating capability is (which factors in any temporary limitations). CAMO allows you to update both the configured and current capabilities of the aircraft. This information is useful for the users responsible for aligning aircraft tail numbers to flight numbers.

Note You can view any changes made to capabilities on the Inventory Details page on the Historical > Additional tab.

Related concepts

Viewing flight capability requirements

Related tasks

Assign or remove capabilities in aircraft assemblies
Set up capability levels of aircraft
Edit capability levels of aircraft

Viewing flight capability requirements

The Flight Details page includes a Capability Requirements field that lists all applicable capability requirements and their levels for a flight. This information can be used by Maintenance Controllers to see if the next or upcoming flight(s) meet the specified requirements, and make decisions accordingly.

Related concepts

Aircraft capabilities

Edit capability levels of aircraft

If situations arise that limit the capability of an aircraft, you need to edit the aircraft's current capability levels. For example, if an aircraft has a Wi-Fi capability, but Wi-Fi is currently broken, you edit the current capability level to indicate that Wi-Fi is broken.

Steps

1. On your to-do list, **Fleet List** tab, click the required aircraft.
2. On the **Inventory Details** page, **Capabilities** tab, click **Edit Capability Levels**.
3. On the **Edit Capability Levels** page, select or enter the current level of the required capability under **Current Level**.

   Note The options available as current levels are in alignment with the configured levels. You cannot select a current level above the configured level. For example, if the configured seat count level is 137, then the current seat count level should be 137 or less.

4. Click **OK**.

You can view any changes made to the Capability levels on the Inventory Details page on the Historical > Additional tab.

Related concepts

Aircraft capabilities

Turn checks and service checks

Line maintenance includes creating and scheduling work packages for turn and service checks. The work to be done in a turn or service check is usually specific to aircraft of a specific type.

A turn check consists of the tasks that must be performed between two flights. A service check includes routine maintenance activities that must be performed regularly, usually every 24 to 48 hours. It can be executed during a multi-hour layover at an airport, or during an overnight stop.

Turn and service checks include standard scheduled maintenance and work deferred from previous maintenance visits. As new deferrals occur, or if the destination of the aircraft changes, the scope and/or location of the work package can also change.

You can model turn and service checks like any other type of maintenance visit by creating task definitions and packaging the tasks created from these definitions into work packages that will be scheduled to line locations. This is a repetitive process because turn and service checks are so frequent.

To facilitate the process, you can model turn and service checks as explained in this section; when that is done, maintenance planners or supervisors can quickly create the work packages for turn and service checks manually, or have CAMO create them automatically by using the Line Planning Automation (LPA) tool.

To use LPA to create turn and service checks automatically, your administrator must configure CAMO to run LPA.

Related concepts

Line Planning Automation

Turn and service check block definitions

The following are attributes associated with turn checks and service checks.

To quickly create turn and service checks manually, or to have LPA create them automatically, you must create block definitions that have specific attributes for each type of aircraft in your fleet for each aircraft assembly in CAMO. Turn and service checks must be modeled as one-time blocks, task definitions with the class of BLOCK, and have the attributes listed in the following table.

Block definition attributes for quick or automatic creation of turn and service checks

Block definition attribute	Turn check	Service check
Is a recurring block	No	Yes
Can be part of a block chain	No	No
Defined as on-condition	Yes	No
Applicability rules	Not allowed	Allowed
Scheduling rules	Not allowed	Mandatory; only one calendar based scheduling rule.

The block definitions must be activated before you can create turn or service checks.

Turn and service work package names

You can create name templates to generate the name of line and service work packages, whether you plan to use Line Planning Automation (LPA) to automatically create and schedule turn and service work packages, or you plan to create the work packages manually.

In the name templates, you set the elements, static text, spaces, hyphens, and punctuation to include in the name of the work packages LPA creates. Work packages for turn and service checks can have different name templates. The elements you can include are variables that LPA replaces with information about the following:

- The aircraft
- The airport where the turn or service check work package is scheduled
- The arrival flight that brings the aircraft to the scheduled location of the work package
- The assembly the aircraft belongs to
- The block definition used to create the work package
- The departure flight scheduled at the end of the ground stop during which the work package is scheduled.

Elements for turn and service work package name templates

Information about	Element	Syntax for name template	Used for manually created turn work packages
Aircraft	Aircraft registration number	`${aircraft.registration}`	Yes
Airport	Airport code	`${airport.code}`	No
	Airport name	`${airport.name}`	No
Arrival flight	Date of arrival flight	`${arrival.date}`	No
	Arrival flight number	`${arrival.flight}`	No
	Arrival flight gate number	`${arrival.gate}`	No
	External key of arrival flight	`${arrival.key}`	No

Information about	Element	Syntax for name template	Used for manually created turn work packages
	Scheduled arrival time	`${arrival.time}`	No
Assembly	Assembly code	`${fleet.code}`	Yes
	Assembly code	`${fleet.name}`	Yes
Block definition	Block definition code	`${block.code}`	Yes
Departure flight	Date of departure flight	`${departure.date}`	No
	Departure flight number	`${departure.flight}`	No
	Departure flight gate number	`${departure.gate}`	No
	External key of departure flight	`${departure.key}`	No
	Scheduled departure time	`${departure.time}`	No

All elements are used when work packages are created automatically with LPA.

The following are examples of name templates:

- The name template:

  ```
  ${aircraft.registration}-${block.code} on ${arrival.date} at
  ${airport.code} arriving as ${arrival.number}
  ```

  Results in the following work package name:

  OTA123-TURN on 20120606 at YOW arriving as OTA45
- The name template:

  ```
  ${airport.code}/${arrival.date}/${aircraft.registration}-
  (${block.code})
  ```

  Results in the following work package name:

  YOW/20120614/OTA123-(TURN)

Related concepts

Running LPA and viewing results

Scheduling line and work checks

If you have locations that can only perform turn checks, some that can only perform service checks, and others where both can be done, you can assign service and turn capabilities to locations.

Ensure that SERVICE capability is assigned to the line locations where service checks can be scheduled, and the TURN capability is assigned to locations where turn checks can be scheduled, and both capabilities to locations where both types of checks can be scheduled.

On the Line Check Settings page, assign SERVICE as the work type for service work packages, and TURN as the work type for the turn work packages.

Tip

For reporting purposes, you may want all of your turn and service work packages to share a common work type, for example the LINE work type. In this scenario, you assign the common work type (LINE) to both turn and service check settings, in addition to the other work type you assigned to each type of check. You also assign the LINE work type to all line maintenance locations.

LPA only schedules turn work packages to locations that have both the TURN and LINE work types, and service checks only to locations that have both the SERVICE and LINE work types. All turn and service work packages share the LINE work type, which you can use for reporting.

Related tasks

Add capabilities to a location

Select turn and service check settings

Select turn and service check settings

After you create the block definitions for an aircraft type, you must assign the definition to the correct aircraft assembly and select other options from the Line Check Settings menu item.

Prerequisite

- A block definition exists for the aircraft type.

Steps

1. Select **Line Check Settings** from the CAMO menu.
2. Select the aircraft from the dropdown menu and click **Edit Line Check Settings**.

3. Provide the required information. Note the following:
   - **Automation Enabled**: Select whether CAMO creates the work packages for the check automatically using Line Planning Automation (LPA), or users will create the work packages manually.
   - **Block Definition**: Select the block definition to use when creating the work package. Only the block definitions that have the required attributes for the type of check you are assigning are available in this list.
   - **Name Template**: Use to generate the name of turn or service work packages that LPA creates automatically from the block definition or turn checks that are created manually.
   - **Work Type**: Select one or more work types to assign to the work package. Select LINE for line checks and SERVICE for service checks.
   - **Subclass**: Optional and for informational purposes only.
4. Click **OK**.

Related concepts

Running LPA and viewing results
Turn and service work package names

Create turn check work package manually

When a turn check won't be generated by LPA, you can create one quickly by creating it manually.

Prerequisite

- A turn check block definition exists for the fleet.

About this task

The turn check work package can inherit the name of certain elements of the assembly.

Steps

1. On the **Fleet List** tab, select the aircraft and click **Create Turn Work Package**.
2. On the **Create Turn Work Package** page, provide the required information, and click **OK**.

Related concepts

Turn and service work package names

Completing work packages

When all the tasks in a work package are complete (or unassigned) maintenance supervisors complete the work package. If the work package is for an aircraft that's returning to service, your signature certifies that the aircraft is airworthy.

Completing a work package closes the tally sheet. Before you complete a work package, you should confirm that:

- The original tally sheet was verified by the technicians.
- All job cards in the workscope are collected.
- All logbook faults are entered in CAMO.
- All faults in CAMO are entered in the logbook.
- All faults are listed on the final tally sheet.

After you click Complete Work Package, you are taken to the Preview Release page to view a summary of errors and warnings to assess and resolve before you complete the work package. Ideally and especially in a large work package, you've previewed the release previously to handle some issues.

When you complete an aircraft work package, depending how your system is configured, you might have the option to choose whether to release the aircraft to service.

CAMO enforces the rule that all tasks in the work package must be completed prior to release of the aircraft, but ultimately the decision to release the aircraft lies with the supervisor. Depending on how CAMO is configured, some issues are errors that prevent completion and some issues are warnings that don't prevent aircraft release in CAMO.

After a component work package is closed, if there are no open faults or other IN WORK work packages, the inventory is serviceable and in RFI condition except in the following situations:

- The associated part number has the **Force Inspection on Receipt** check box selected and the FORCE_INSP_REPAIR_RELEASE configuration parameter value is true. The inventory condition changes to INSPREQ (inspection required).
- Ready for Build is enabled and the work package was closed with missing, mandatory, tracked, sub-components. The inventory is serviceable and the inventory condition changes to RFB (Ready for Build).
- The component work package was completed externally as part of a Repair Order, and the part number has the **Force Inspection on Receipt** check box selected. The inventory condition changes to INSPREQ regardless of the value of the FORCE_INSP_REPAIR_RELEASE configuration parameter.

Release to service

Releasing an aircraft into service certifies airworthiness. This certification is done when you are completing an aircraft work package and signing the last signoff requirement.

If the SHOW_RELEASE_TO_SERVICE configuration parameter is enabled, then when you sign the last sign-off requirement in an aircraft work package and there are no open faults or other IN WORK work packages for the aircraft, the Release To Service drop-down list becomes visible with Yes pre-selected. When Yes is selected, you'll see on the electronic signature report that the Release To Service check box is selected. When the work package closes, the aircraft is in INSRV condition.

Selecting 'no' indicates that although the aircraft condition changes to INSRV when the work package is completed, you are not releasing it to service.

If you always release aircraft to service when work packages are complete, the Release to Service drop-down list might not be part of your workflow. If the SHOW_RELEASE_TO_SERVICE configuration parameter is FALSE, then when you sign the last sign-off requirement in an aircraft work package, you don't see the Release To Service drop-down list, the aircraft is released to service, and on the electronic signature report, the Release To Service check box is selected.

If a work package is auto-completed, for example, packaged and completed, CAMO does not release an aircraft to service.

How to recover from an error releasing an aircraft

If you accidentally release the aircraft to service, you must create another IN WORK work package for the aircraft.

Likewise, if you accidentally select no when you meant to release the aircraft, you must create another empty work package for the aircraft and sign off the release.

Related concepts

Complete Work Package report
Previewing releases

Related tasks

Batch complete tasks
Complete a work package

Complete a work package

When all tasks in a work package are completed or unassigned, you complete the work package. For aircraft work packages, the release to service procedure is done during work package completion.

Steps

1. To find a work package, do one of the following:
   - In the **Barcode Search** field, enter the work package barcode, and press **Enter**.

- On the **Task Search** page, in the **Work Package Information** area, provide the information requested and click **Search**.
- On the **Tasks / Work Packages Found** page, click the name or ID of the work package.

2. On the **Work Package Details** page, **Workscope** tab, verify that all tasks have a status of **Complete**.
3. On the **Work Package Details** page, click **Complete Work Package**.
4. On the **Preview Release** page, if there are no critical warnings click **Next**.

> **Note** If the Ready for Build feature is enabled, you can complete a component work package for a component that is missing mandatory, tracked, sub-components.

5. On the **Complete Work Package** page, in the **Signoff Requirement** area, for each skill, click **Sign**.
6. If you are signing the last signoff requirement in an aircraft work package, then in the **Release Aircraft** area, if the **Release to Service** list is visible, yes is selected:
   - To complete the work package and release to service, enter the **Release Number** and **Release Remarks**.
   - To complete the work package without releasing to service, click **No**.

> **Note** When a REPL task is assigned to a work package and then published to an external maintenance execution system, the REPL task status changes to CANCEL in Maintenix once the task is executed, and its configuration is updated accordingly. When the maintenance execution system completes the work package, Maintenix changes the status of the REPL task to EDIT and completes the work package as well.

> **CAUTION** If you click **No**, and do not enter the **Release Number** and **Release Remarks**, the work package is completed and cannot be recovered for additional edits. You will need to create a new empty work package.

7. If prompted, enter your password and click **OK**.

> **Note** You might be able to select the Current Capability and ETOPS Ready check box, but these are typically updated by MOC in another work flow.

8. Click **Close**.

Related concepts

Aircraft capabilities
RFB inventory condition
Completing work packages
Complete Work Package report
Replacement requirements

Complete component work package as unserviceable

In some situations you might close a component work package as unserviceable.

Prerequisite

- All tasks in the work package are completed. (You can unassign tasks that were not performed.)

Steps

1. To find the work package, do one of the following:
   - On the **Inspection Required** tab, for an inventory row, click the link in the **Open Work Package** column.
   - Scan or enter the inventory barcode, go to the **Inventory Details** page > **Open Work Packages** tab.
   - Click a work package and open its **Work Package Details** page.
2. On the **Work Package Details** page, click **Complete Work Package As Unserviceable**.
3. On the **Complete Work Package** page, in the **Signoff Requirements** area, click **Sign** for each sign off requirement.
4. On the **Complete Work Package** page, click **Close**.

Complete Work Package report

The Complete Work Package report displays when you sign each sign-off requirement and E-Signature is enabled. This report details all of the work performed during the maintenance visit.

The Complete Work Package report shows the following:

- a list of all workscope items and associated sign-offs
- check boxes to indicate whether the Release to Service and/or ETOPS Ready was specified
- all sign-offs for the work package

Related concepts

Completing work packages

Related tasks

Complete a work package

Work package management

As the scheduled maintenance visit approaches, production planners review, adjust, schedule, and commit the workscope that was defined by long range planners. During the visit and afterwards, production controllers make plan adjustments and manage task cards and tally sheets.

The CAMO Production Planning and Control (PP&C) application is designed to manage heavy maintenance work packages, which are typically much larger than line and shop work packages.

Related concepts

Production planning and control application

Update job cards that have newer revisions

Engineers update job card definitions regularly, but once a work package is started, planners and check controllers decide on a card-by-card basis whether to update job cards in the work package to the latest revision.

About this task

From the Work Package Details page, you can review the list of job cards whose definitions were updated, read the revision reason and notes for each revised job card, and then select cards that you want to update. You have the option to filter on the revision reason and to select all so you can make quicker decisions about which cards to update with minimal impact and which cards require further consideration.

Steps

1. On the **Work Package Details** page, click **View Job Cards with Newer Revision**.
2. (Optional) On the **Job Cards with Newer Revision** page:
   - To filter the list by Revision Reason, click **Options**, select a Revision Reason, and click **Filter**.
   - To search for revisions, type search words in the **Revision Note Contains** field.
   - To see more information about the revisions for a specific job card, you can click on its Rev number hyperlink (open link in a new tab). On the Job Card Details page, click the Revision tab and view the revision history. (When done, return to the tab showing the Job Cards with Newer Revision page.)
3. Select the cards that you want to update (or click **Select All**) and click **Update Job Card to Latest Revision**.

Move tasks and faults between work packages

Planners can move some tasks and faults from one work package to another. The type and status of the tasks and faults dictates which ones you can move. You might move tasks and faults because you have unscheduled downtime and see an opportunity to pull forward work that was scheduled later.

When you move tasks and faults from one work package to another, you can move ACTIVE and FORECAST tasks if both work packages are scheduled against the same root inventory. You can move faults that have not been deferred, but the aircraft will remain unserviceable until the fault is resolved or deferred.

You cannot move the following:

- Tasks that are already assigned to an IN WORK or COMMITTED work package.
- Requirements that are part of a block. You can move the block, but not the individual requirements in the block.
- Job cards. Job cards are associated with requirements. To move a job card, you must move its parent requirement.
- FORECAST tasks to IN WORK work packages.
- Multiple tasks that are scheduled against different root inventories. When you move multiple tasks, they must all be scheduled against the same root inventory.
- Tasks in CANCEL, COMPLETE, ERROR, or TERMINATE status. You can move ACTIVE and FORECAST tasks.
- Work packages to other work packages.

You can select and assign tasks and faults to work packages on different pages such as Task Search, Task Search by Type, Fleet Due List, Fault Search, Fault Search by Type, and the Inventory Details page, Open tab, Open Tasks tab. Depending on your starting page and whether you're moving a task or a fault, the button that you click may be Assign Tasks and Faults to Existing Work Package or Assign Fault to Work Package.

For more information, see *Reassign tasks and faults*.

Reassign tasks and faults

You can reassign tasks and faults from one work package to another.

About this task

For more information, see *Move tasks and faults between work packages*.

There are various pages on which you can move or assign tasks and faults between work packages. Depending on your starting page and whether you're moving a task or a fault, there are small variations in button names and page titles.

The following steps provide an example of moving a task from one work package to another from the Task Search page.

Steps

1. On the **Task Search** page, provide the search criteria and click **Search**.
2. On the **Task/Work Packages Found** tab, select one or more tasks.
3. Click **Assign Tasks and Faults to Existing Work Package**.
4. On the **Assign Tasks to Work Package** page, select a work package.
   The **Tasks/Work Packages Found** tab page refreshes. For the task that you moved to a different work package, the **Assigned To Work Package** information is updated.

Print task cards

Prerequisite

- The workscope is committed.

About this task

Task cards contain all of the information needed to complete a task, including work instructions, and the required tools and parts. You can print the task card for an individual task, or you can print some or all of the task cards for a work package. For each task card, CAMO prints the following:

- Job card: One page of details about the task, including the task barcode, name, and description. You can scan the barcode on the job card to find the matching record in CAMO.
- Job card steps: Instructions attached to the specific task, including skills attached to these steps. Examples of step skills include AandP and AMT.
- Signatures: Sign offs for any labor performed; including certification and independent inspection, if applicable.
- Technical references: Specific sections of technical manuals required to carry out the task.
- Attachments: PDF files that contain information related to the task.

Note You can print off a found fault report when administering faults. A found fault report, much like a task card, contains information required for completing a fault, including: a barcode; baseline steps; skills and skill status; work performed; certification; independent inspection, and signatures.

You can print an individual task card directly from a task, or print multiple or all task cards from the work package. Printing all task cards in a work package involves printing several hundred task cards, IETMs, and attachments.

Steps

1. Do one of the following:
   - In the **Barcode Search** field, scan or enter the barcode of the task, and press Enter.
   - On the **Task Search** page, enter your search criteria, and click **Search**.

- On your to-do list, **My Tasks** tab, select the check box of the task.

2. On the **Task Details** page, click **Print Task Card**.
3. In the **Confirm Printer** dialog box, select a printer and click OK.
4. Do one of the following:
   - In the **Barcode Search** field, enter the work package barcode, and press Enter.
   - On the **Task Search** page, in the **Work Package Information** area, provide the information requested and click **Search**.
   - On your to-do list, in the **Work Package** column of any tab, click a work package name.
5. On the **Work Package Details** page, **Workscope** tab, select one or more tasks.
6. Click **Print Selected Task Cards**.
7. In the **Confirm Printer** dialog box, select a printer and click OK.

Capacity planning

Shift patterns

A *shift* is the period of time that a person spends at work. A shift has a defined start time and a duration. The net hours worked in a shift may be less than the shift duration, if breaks are allowed.

A user *shift pattern* consists of several shifts that cover a specified time period, often a week. You can define several standard shifts and use them to build a shift pattern. You then assign the shift patterns to technicians and crews to build their work schedule. You can also specify various types of time off using the shift pattern for the user.

The assigned shift patterns make up the user or crew's schedule, which includes shifts and any shift adjustments and time off specified.

Create shift patterns

Shift patterns consist of several shifts that cover a specified time period, often a week. Assign technicians to shift patterns to build their work schedule. You can also build a crew's schedule by assigning shift patterns to departments of type crew.

Steps

1. On your to-do list, **User Shift Pattern Setup** tab, click **Create User Shift Pattern**.
2. In the **Details** box, enter the following information and click **OK**.
   - **Code**: Assign a code to your shift pattern.
   - **Name**: Assign a name to the shift pattern.
   - **# of Days**: Enter the number of days in the shift pattern.
   - **Default Shift**: Select the shift that will make up the shift pattern.

Once you've created the shift pattern, you can *edit the details of the shift pattern*.

Edit shift patterns

Edit the shift pattern to add different shifts based on the day.

About this task

When you create a shift pattern, it inherits the values of the default shift. This shift is scheduled each day of the shift pattern. You may want to edit the shift pattern to add a variety of shifts or days off.

> **Important** You cannot edit a shift pattern that is assigned to a crew. The shift pattern must be unassigned from the crew before editing.

Steps

1. On your to-do list, **User Shift Pattern Setup** tab, click the shift pattern to edit.
2. On the **User Shift Pattern Details** page, **Shift** tab, click **Edit Shifts**.
3. Do one or both of the following:
   - On the **Edit Shifts** page, select a shift for each day from the drop-down list.
   - To change the number of days in the shift pattern, select the day and click **Add Day** or **Remove Days**.
4. When you are done, click **OK**.

View crew details

Crews are modeled as a type of department in CAMO. You must navigate to the **Department Details** page to view who is on the crew, the crew's schedule, and the crew's location.

Steps

1. Go to the **Department Search** page.
2. Provide the information requested, paying particular attention to the following fields:
   - **Department Type**: Select **CREW (Crew)**.
   - **Department Name**: Specify the name of the crew if applicable.
   - **Department Code**: Specify the department code if applicable.
3. Click **Search**.
4. On the **Departments Found** tab, click the crew you want to view.

   The **Department Details** page opens, displaying the **Users**, **Schedule**, and **Locations** tab.

Add a shift pattern to a crew

Add a shift pattern to a crew to define that crew's schedule. This allows the planner to determine the crew's capacity and assign an appropriate amount of work.

Steps

1. Go to the **Department Details** page, **Schedule** tab.
2. In the **Schedule** area, click **Add Shift Pattern**.
3. In the **Details** area, select the **Shift Pattern**, and the start and end date for the shift pattern.

   The selected shift pattern start and end date appear on the department's **Schedule** tab.

Remove a shift pattern from a crew

When a crew's schedule changes, you can update the schedule by removing the corresponding shift pattern from the crew.

Steps

1. Go to the **Department Details** page, **Schedule** tab.
2. In the **Schedule** area, select the shift pattern.
3. Click **Remove Shift Pattern**.

When you remove a shift pattern from a crew that had tasks assigned to it, those tasks are automatically unassigned from the Crew Shift Day. Once you remove the shift pattern, you can add a new one. See *Add a shift pattern to a crew*.

Assign tasks to crews

You can assign multiple tasks at a time, and view the upcoming availability of crews, from the Plan Shift page.

Steps

1. On the **Work Package Details** page, click **Plan Shift**.
2. On the **Plan Shift** page, enter the task information, or leave the fields blank and click **Search** to see a list of tasks.
3. Select the tasks to be assigned to a crew.
4. Click **Assign Crew**.

   The **Assign Tasks to Crew** page opens, displaying the following information:

   - **Task Information**: Displays selected tasks and important information to help you decide which crew to assign.
   - **Total Selected Task Effort**: Displays the number of labor hours for all the selected tasks.
   - **Total Task Hours**: The sum of the Work Performed Sched. Hours for all active labor rows.

- **Show Crew Details for the next Hours**: To view upcoming crew availability, enter the number of hours to view and click **Search**.
- **Select a Crew**: Select the crew to assign from the list.

5. Select the crew to which you want to assign the tasks and click **OK**.

   The tasks are assigned to the crew, the **Assign Tasks to Crew** page closes, and you return to the **Plan Shift** page. The assigned tasks will appear on your **Assigned to Your Crew** tab.

Crew Shift Day

In CAMO, a crew is a department with a type of Crew. A shift pattern is a group several shifts that cover a specified period of time, often a week.

The Crew Shift Day entity describes a crew that has been linked to a shift pattern on a given day. This is used to calculate a crew's capacity. You can view the capacity of a Crew Shift Day when assigning tasks.

Assign tasks to Crew Shift Days

Assign tasks to a Crew Shift Day from the Plan Shift page. You can assign multiple tasks at a time and view the upcoming availability of crews.

Prerequisite

- The work package has been committed.
- The schedule for the crew has been generated.

Steps

1. On the **Work Package Details** page, click **Plan Shift**.
2. On the **Plan Shift** search page, enter the task information, or leave the fields blank and click **Search** to see a list of tasks.
3. Select the tasks to which you want to assign a Crew Shift Day.
4. Click **Assign Crew Shift Day**.

   The **Assign Tasks to Crew Shift Day** page opens, displaying the following information:

   - **Task Information**: Displays selected tasks and important information to help you decide which crew to assign.
   - **Total Selected Task Effort**: Displays the number of labor hours required for all the selected tasks.
   - **Crew Shift Day for the next hours**: To view upcoming crew availability, enter the number of hours to view and click **Search**.

   Select **Only show my crew** to see only crews to which you are assigned.
5. Select the Crew Shift Day to which you want to assign the tasks.

> **Tip**
>
> Select **Unassign** to unassign the tasks from a previously assigned crew or Crew Shift Day.

6. Click **OK**.

   The tasks are assigned to the crew, the **Assign Tasks to Crew Shift Day** page closes, and you return to the **Plan Shift** page.

Unassign a task from a Crew Shift Day

When plans change, you can unassign a task that was assigned to a Crew Shift Day.

Steps

1. On the **Work Package Details** page, click **Plan Shift**.
2. On the **Plan Shift** search page, enter the task information, or leave the fields blank and click **Search** to see a list of tasks.
3. Select the task to unassign the Crew or Crew Shift Day from, and click **Unassign Crew**.

Temporary crew assignments

Crew Leads or Resource Managers can assign a technician to a crew temporarily to optimize the distribution of labor. This is helpful when there are too many technicians in one area for the amount of work to be done; you can assign technicians to another area with a greater need.

After the temporary assignment period is completed, the assignment is removed automatically.

Temporarily assign a user to a crew

You can assign a technician to a crew temporarily when you need to redistribute labor.

Steps

1. On the **User Details** page, **Schedule** tab, **Shift Adjustments** table, click **Add Shift** ⊞.
2. Enter the required information and click **OK**.

   You only need to enter an end date if the temporary crew assignment lasts longer than one day. The temporary crew assignment ends automatically on the end date that you choose.

> **Note** When you schedule a temporary crew assignment on a day that already has a shift scheduled, the new shift will overwrite the previous shift.

The temporary crew assignment appears on the user's schedule and the **Assigned to Your Crew** tab for the duration of the assignment.

Edit temporary crew assignment

Edit the details of a temporary crew assignment to correct or add information.

Steps

1. On the **User Details** page, **Schedule** tab, **Shift Adjustments** table, select the shift with the temporary crew assignment to edit and click **Edit Shift**
2. Make the necessary changes and click **OK**.

Remove temporary crew assignments

Crew Leads and Resource Managers can remove a temporary assignment of a technician to a crew to correct an administrative error or update the system to reflect the changing situation.

Steps

1. On the **User Details** page, **Schedule** tab, **Shift Adjustments** area, select the shift(s) to remove.
2. Click **Remove Shift**.

The user is no longer temporarily assigned to the crew.

Filter Assigned to Your Crew tab

Filter the list of tasks assigned to your crews to see all work or only work assigned to any of your temporary crews.

Steps

1. On the **Assigned To Your Crew** tab, click **Options**
2. In the **Options** box, select the crews to view beside **Show Work Locations** and click **OK**.

View upcoming crew assignments

Crew Leads can view all temporary crew assignments that affect their crew (both incoming and outgoing), manage the temporary assignments, and see who to expect to be working on a particular day.

Steps

1. On the **Department Details** page, **Users** tab, see the **Crew Change Schedule** box.

   A table with the following columns appears:

- **Change Date**: The date to which the change applies.
- **Name (Code)**: Name of the user affected.
- **Shift Name**: The shift code.
- **Crew**: Indicates a temporary crew assignment. Arrows show whether the crew member is joining this crew temporarily ‹ From, or leaving this crew temporarily › Joining.
- **Primary Skill**: The user's primary skill.

2. Select **Show Only Today's Date** to only view today's assignments.

View your upcoming schedule

View your upcoming scheduled work in CAMO.

Steps

1. Go to your **User Details** page, **Schedule** tab.

   The Schedule box appears with the following information:

   - **Location**: Where you report to for this shift.
   - **Date**: Date of the shift.
   - **Shift**: Shift code.
   - **Primary Skill**: The skill associated with the shift.
   - **Temporary Crew**: Any temporary crew assignments during the displayed timeframe.

2. *Optional.* Change the number of scheduled days shown by changing the number in **Show Schedule for the next Days** and clicking **OK**.

Tally sheets

In heavy maintenance visit, when all of the tasks and faults in a work package are complete, the production controller can generate and print a tally sheet.

The tally sheet contains a line for each task and fault in the work package. Tally sheets are commonly used by your organization's finance department to track maintenance costs associated with each maintenance check.

Line maintenance can print an ordered tally sheet for the work package. The ordered tally sheet contains a line for every task and fault, in an order you choose. Line mechanics use ordered tally sheets during maintenance execution, and specify that tasks are carried out in a particular order, and ensure that the required tools are available and are not being used by a competing task.

Access to the Print Tally Sheet, Print Ordered Tally Sheet, and Edit Tally Line Order buttons on the Work Package Details page is controlled by permissions.

The production controller can double-check each line on the sheet to ensure that each task has been performed correctly, and initial each line to keep track of which tasks are done, and which

are not. The tasks and faults do not have to be complete in order to generate a tally sheet. See *Print tally sheets* or *Print ordered tally sheets*.

After each line has been double-checked, the production controller can sign the bottom of the tally sheet, and hand the sheet to the technical records department.

Print tally sheets

You can print a tally sheet or an ordered tally sheet for a work package when you are ready to begin work.

Prerequisite

- The workscope is committed.

About this task

A tally sheet lists all of the tasks and faults in a work package.

Steps

1. Find a work package by doing one of the following:
   - In the **Barcode Search** field, enter the work package barcode, and press Enter.
   - On the **Task Search** page, in the **Work Package Information** area, provide the information requested and click Search.
   - On your to-do list, in the **Work Package** column of any tab, click a work package name.
2. On the **Work Package Details** page, click **Print Tally Sheet**.
3. On the **Tally Sheet** report page, click **Print**.

Edit tally sheet order

An ordered tally sheet contains a line for every task and fault in an order you choose.

About this task

Line mechanics use ordered tally sheets during maintenance execution to specify that tasks are carried out in a particular order, and ensure that the required tools are available and are not being used by a competing task.

Steps

1. Find a work package by doing one of the following:
   - In the **Barcode Search** field, enter the work package barcode, and press Enter.
   - On the **Task Search** page, in the **Work Package Information** area, provide the information requested and click Search.
   - On your to-do list, in the **Work Package** column of any tab, click a work package name.
2. On the **Work Package Details** page, **Workscope** tab, click **Edit Tally Line Order**.
3. Use the buttons to move lines up and down.

4. Click **Close** when you finish editing the line order.

What's next

To print the Tally sheet in the selected order, you must use Print Ordered Tally Sheet. See *Print ordered tally sheets*.

Print ordered tally sheets

An ordered tally sheet lists all all of the tasks and faults in a particular order, indicating when the work should be completed.

Prerequisite

- The workscope is committed.

Steps

1. Find a work package by doing one of the following:
   - In the **Barcode Search** field, enter the work package barcode, and press Enter.
   - On the **Task Search** page, in the **Work Package Information** area, provide the information requested and click Search.
   - On your to-do list, in the **Work Package** column of any tab, click a work package name.
2. On the **Work Package Details** page, click **Print Ordered Tally Sheet**.
3. On the **Ordered Tally Sheet** report page, click **Print**.

Tasks

In CAMO, tasks are units of work that are packaged into work packages and assigned to technicians or crews. Tasks are created for scheduled maintenance and corrective tasks are created to address faults. Tasks, like paper job cards, contain the information required to perform the work or to address a fault and are used to sign off on work.

Workflows and steps that you only do for faults are documented separately under the Faults topic.

Tasks that are performed at specified intervals as part of your scheduled maintenance program are created automatically based on the requirement definitions that engineers create for inventory. Planners review upcoming task deadlines, package tasks into work packages, and schedule the work packages.

Tasks can also be created manually. Users with the proper permission settings can create the following tasks:

- Ad-hoc tasks: tasks created without a task definition.
- Faults: tasks created to address problems recently identified on an asset; for example, the result of an inspection.

- On-condition tasks: tasks created that are necessary under certain conditions. You initialize the appropriate on-condition task definition when the condition has occurred. For example, tasks required following a hard landing, a bird strike, or when an aircraft is hit by lightning.
- Opportunistic tasks: tasks created to address additional and non-mandatory activities.

Tasks include summary, execution, scheduling, and warranty information as well as a task history record.

Labor on tasks and faults

Tasks contain one or more labor requirements called labor rows which are assigned to technicians or others depending on the skills required for the row. The status of the task is determined by the status of the labor rows. Tasks can have the following statuses:

Status	Description
ACTV	Task is created but not started.
IN WORK	At least one labor row on the task is started.
COMPLETE	All labor rows on the task are complete.
FORECAST	Recurring tasks that are scheduled for after the ACTV instance of the task is complete. Committed work packages don't contain FORECAST tasks (but tasks do show Next Task links which can be forecasted tasks).
ERROR	The task or fault was marked as Error. This happens when someone completes a task or fault by mistake and uses the Mark Task As Error or the Mark Fault As Error button.

After supervisors, lead technicians, or crew leads assign tasks, you see your assigned tasks on your to-do list. To start work on a task, you start a labor row. If the labor row requires certification and independent inspection, the row isn't complete until these activities are recorded for the row.

Steps on tasks and faults

Tasks and faults can contain steps from job card or executable requirements and steps that were added manually, although the ability to add additional steps to tasks created from task definitions is configured with the ALLOW_ADHOC_JOB_STEPS_ON_BASELINE_TASKS parameter. See the CAMO Administration Guide.

If steps were added manually, you can remove, edit, or reorder them. You can't remove, edit, or reorder steps on tasks and faults that are based on task definitions or repair references, but you can mark these steps as N/A when appropriate.

If a task or fault contains steps, then when you record work for your labor row, you update the step status for the steps that you worked on. When you select the step status, and proceed with the work capture, your name is recorded against the step. Before the task or fault is complete, all steps must be complete or N/A.

Steps can contain skills - if so, instead of updating the step status, you update the step skill status for your skill when you record work for your labor row.

Related concepts

Part requirements
Recording work on tasks and faults
Step skills on tasks and faults
Task certification and inspection

Find a task or fault

About this task

There are several ways to find a task or fault.

Steps

Do either of the following:

To	Do this
Find a task	• On the Task Search page, enter your search criteria and click Search. • On your to-do list, My Tasks tab, select the check box of the task.

Find a fault	• In the Barcode Search field, scan or enter the fault's barcode and press Enter.
	• On the Fault Search page, select a Search Type from the following types, enter your search criteria and click Search:
	  • Search By Logbook Number
	  • Search By Aircraft and Name
	  • Search By Assembly and Name
	  • Search By Aircraft and System
	  • Search By Assembly and System
	  • Search By Removed Part
	  • Search By Part Number

To	Do this
	• On the Unconstrained Fault Search page, enter your search criteria and click Search. • On your to-do list's Engineering Required - Tasks tab, click the fault name. • On the Inventory Details page, Open tab, Open Faults tab, click the fault name.

Create subtasks for faults

If you create subtasks for faults in Maintenix, you can search for task definitions by code or name and filter results by inventory config slot. You can view both Requirement and Job Card definitions together in a single list, showing only tasks relevant to your aircraft or assembly. You can also include tasks from sub-config-slots and reset your search criteria with one click.

1. Go to the **Task Selection** page
2. Enter a task code or name in the search field and choose "Starts With" or "Contains" to filter results.
3. Select an inventory config slot to narrow down the list, and check the box to include tasks from sub-config-slots if needed.
4. View both Requirement and Job Card definitions together in a single list.

> **Note** The results include both Requirement and Job Card definitions in a single list, and shows only tasks relevant to your aircraft or assembly. Job Cards connected to a Requirement are displayed in a hierarchical tree structure.

5. Review the list, which shows only tasks applicable to your aircraft or assembly.

   *Click **Clear All** to reset your search and filters at any time

Task Selection : Create New Task

Task Type

- (●) Create Task Based on Requirement or Job Card Task Definition
- ( ) Create Task Based on Job Card Task Definition
- ( ) Create Ad-Hoc Task

Search Criteria

Assembly: 737-NG

Task Definition Name or Code: 737-NG

Inventory Config Slot: 737-NG *With Tasks on Sub Con*

Filter | Clear All | ○ Starts With | ◉ Contains

Task Definitions

	Task Definition	Task
○	⊟ REQ-LDG-GEAR-TIRE-REPLACEMENT	
	⊟ JIC-LDG-GEAR-TIRE-REMOVE	

Claim tasks assigned to your crew

If you are part of a crew department in CAMO and maintenance supervisors assign tasks to crews, you can view the list of tasks assigned to your crew along with the skills required for each task. You claim a task, start the specific labor row for which you have the necessary skill and assign yourself to that labor row in the task.

Steps

1. Go to your to-do list, **Assigned To Your Crew** tab.
2. Select the row of the task you want to start.
3. Click **Start**.
   The task is assigned to you and its status is changed to In Work. The task is removed from the Assigned to your Crew tab, but appears on your My Tasks tab.

Ad hoc tasks

To address one-time administration tasks you can manually create ad hoc tasks. In CAMO, ad hoc tasks are tasks that are not created based on task definitions.

For example, if you receive a notification that there are some data discrepancies in CAMO involving an asset with a planned maintenance visit, you can create a one-time administrative task for a mechanic to read and record the correct serial numbers found on an asset.

Depending on your permissions, there are different ways in CAMO where a maintenance controller, technician, or other role can create an ad hoc task:

- On the Fleet List, Preview Release, or Edit Inventory task pages, click Create Task.
- On the Inventory Details page, Open Tasks tab, click Create Task.
- On the Work Package Details page, on either the Workscope tab or Tasks tab, click Create New Task.
- On the Task Details page, Task Execution tab, Subtasks area, click the plus sign to Create a New Ad Hoc Subtask.

For each ad hoc task, you can add skills directly under individual job steps based on the presented labor requirement (whether certification is required or not) by enabling the ACTION_ADD_ADHOC_JOB_STEP_SKILLS configuration parameter. This also enables the same permission for ad hoc faults; see *Faults overview*. These steps can be edited on the ad hoc task itself by enabling the ADHOC_EDIT_JOB_STEP_SKILLS configuration parameter. This allows the maintenance of an audit trail for the addition, modification, or removal of steps/skills.

Create an ad hoc task from the fleet list

Maintenance controllers with the appropriate permissions can manually create an ad hoc task directly from the fleet list. You can manually create tasks without a task definition to address one-time administration tasks.

Steps

1. Go to the **Fleet** list.
2. Select an aircraft and click **Create Task**.
3. On the **Select Component** page, select the radio button for the component on which the new task should be created.
4. On the **Task Selection** page, select the **Create Ad-Hoc Task** radio button.
5. On the **Task Selection** page, in the **Task Information** area, provide the required information. Note the following:
   - **Name**: Enter the name of the task.
   - **Subtype**: Select the code that identifies the type of task. Examples of this include **CLEAN (Cleaning)**, **MOD (Modification)**, and **RMVL (Removal)**.
   - **Work Type(s)**: Select the work type for the task. Examples of this include **LINE (Aircraft Ramp Maintenance)** and **HEAVY (Aircraft Heavy Maintenance)**.
   - **Document Reference**: Enter any links to documentation.
   - **Labor Skill:** Select the labor skill to add it to the task. You can select only a skill that is assigned to the organization which you belong.
   - **Scheduled Hours**: Type the scheduled hours for the task.
   - **Issue to Account**: Select the account to record time and material against.
   - **Description**: Type the description for the task.
6. Click **OK**.

Create an ad hoc task for a work package

You can manually create ad hoc tasks on the Work Package Details page to add them directly to the work package.

Steps

1. On the **Work Package Details** page, **Assigned Tasks** tab, click **Create New Task**.

   Note You can also create and add an ad hoc task to the workscope for a a work package by navigating to the **Workscope** tab and clicking **Create Task**.

2. On the **Select Component** page, select the radio button for the component on which the new task should be created.

3. On the **Task Selection** page, select the **Create Ad-Hoc Task** radio button.
4. On the **Task Selection** page, in the **Task Information** area, provide the required information. Note the following:
   - **Name**: Enter the name of the task.
   - **Subtype**: Select the code that identifies the type of task. Examples of this include **CLEAN (Cleaning)**, **MOD (Modification)**, and **RMVL (Removal)**.
   - **Work Type(s)**: Select the work type for the task. Examples of this include **LINE (Aircraft Ramp Maintenance)** and **HEAVY (Aircraft Heavy Maintenance)**.
   - **Document Reference**: Enter any links to documentation.
   - **Labor Skill:** Select the labor skill to add it to the task. You can select only a skill that is assigned to the organization which you belong.
   - **Scheduled Hours**: Type the scheduled hours for the task.
   - **Issue to Account**: Select the account to record time and material against.
   - **Description**: Type the description for the task.
5. Click **OK**.

Create an ad hoc task from inventory details

You can directly add ad hoc tasks for specific inventory from the **Inventory Details** page.

Steps

1. Go to the **Inventory Details** page.
2. Navigate to the **Open** tab, **Open Tasks** sub-tab, and click **Create Task**.

> **Tip** When editing inventory you can alternatively navigate to the inventory task list to manually create new ad hoc tasks. On the **Inventory Details** page, click **Edit Inventory** and navigate to **Step 4: Edit task list for inventory**. In the **Tasks / Work Packages Found** area click **Create Task** and proceed to the steps below.

3. On the **Select Component** page, select the radio button for the component on which the new task should be created.
4. On the **Task Selection** page, select the **Create Ad-Hoc Task** radio button.
5. On the **Task Selection** page, in the **Task Information** area, provide the required information. Note the following:
   - **Name**: Enter the name of the task.
   - **Subtype**: Select the code that identifies the type of task. Examples of this include **CLEAN (Cleaning)**, **MOD (Modification)**, and **RMVL (Removal)**.
   - **Work Type(s)**: Select the work type for the task. Examples of this include **LINE (Aircraft Ramp Maintenance)** and **HEAVY (Aircraft Heavy Maintenance)**.

- **Document Reference**: Enter any links to documentation.
- **Labor Skill:** Select the labor skill to add it to the task. You can select only a skill that is assigned to the organization which you belong.
- **Scheduled Hours**: Type the scheduled hours for the task.
- **Issue to Account**: Select the account to record time and material against.
- **Description**: Type the description for the task.

6. Click **OK**.

Create an ad hoc installation task for missing components

Maintenance controllers can preview a work package before completing a work package. To determine if it is suitable for release, they can create ad hoc installation tasks for any missing components.

Steps

1. Go to the **Work Package Details** page.
2. Click **Preview Release**.
3. In the **Missing Components** area, select the component you want to create a task for.
4. Click **Create Installation Task**.
5. On the **Task Selection** page, select the **Create Ad-Hoc Task** radio button.
6. On the **Task Selection** page, in the **Task Information** area, provide the required information. Note the following:
   - **Name**: Enter the name of the task.
   - **Subtype**: Select the code that identifies the type of task. Examples of this include **CLEAN (Cleaning)**, **MOD (Modification)**, and **RMVL (Removal)**.
   - **Work Type(s)**: Select the work type for the task. Examples of this include **LINE (Aircraft Ramp Maintenance)** and **HEAVY (Aircraft Heavy Maintenance)**.
   - **Document Reference**: Enter any links to documentation.
   - **Labor Skill:** Select the labor skill to add it to the task. You can select only a skill that is assigned to the organization which you belong.
   - **Scheduled Hours**: Type the scheduled hours for the task.
   - **Issue to Account**: Select the account to record time and material against.
   - **Description**: Type the description for the task.
7. Click **OK**.

Adding to tasks and faults

Part requirements

When part requirements are specified in task definitions, committing a workscope or starting a work package triggers fulfillment of part requests. But, if you need to request or use additional parts for a task or fault, you add part requirements to the task or fault.

When you add a part requirement, you search for the part to assign to the requirement. You can select an alternate part from the part group, enter the quantity, add the IPC or other technical manual reference, indicate whether the part will be removed and/or installed, and select the part request action.

Searching for parts to add to requirements

In CAMO, there are different searches and Add Part Requirement pages, with different procedures for adding part requirements depending on which search functionality your organization uses.

The enhanced part search provides a quicker workflow and differs from the legacy part search in the following ways:

- It shows common hardware and only the parts for the aircraft type or sub-assembly that is identified on the task or fault details page. So if a fault is raised against an aircraft, you'll see the engine sub-assembly, but you won't see parts that are under the engine sub-assembly. (The same is true for other sub-assemblies). If a fault is raised against an aircraft and later, during evaluation, you figure out the specific problem and update the failed system, you see the appropriate parts when you search for parts to add to the part requirement.
- In addition to filtering the results by aircraft type, you can select the **Show Applicable** check box to display only the truly allowable part groups that are applicable to the specific aircraft tail number that is shown in the fault or task details page. The **Show Applicable** check box evaluates part applicability, part interchangeability, part incompatibility, and task incompatibility to determine the list of part groups displayed to the end user. Ths ensures that only truly applicable parts are selected by the user for a part requirement and aids in streamlining the workflow.
- Enhanced part search also ensures improved accuracy of maintenance records by eliminating guesswork during fault reporting and part replacements that may occur in rare scenarios where position-controlled TRK parts (e.g.: fire extinguishers, portable oxygen bottles - red, yellow, blue) are moved between positions but not recorded in the system. This is achieved by displaying the manufacturer part number and serial number of the currently installed TRK part against the **Installed Part Number** and **Installed Serial Number** fields on the enhanced part search results drop down view. Any empty positions in relation to the searched TRK part number display that "No inventory is currently installed"

against the above fields. These fields stay hidden for search results relevant to batch or serialized parts.

- You can use the full text search option to show results that contain (don't just start with) your search characters. For example, if you enter "ade" in the Search box, you will see parts such as "Fan Blade" and "Header" but not "bladder."

Specific Part Override (Alternate Parts List in legacy view)

You can select an alternate part from the part group. For the part that you select, you see any warnings that are associated with the override. For example, if you install a part number under a parent configuration slot that has multiple positions, CAMO looks at the part numbers currently installed on all positions on the parent assembly to validate compatibility. If at least one of the positions has an incompatible part number installed, CAMO indicates that there is incompatibility even if the position where you are installing has a compatible part. These warnings also apply to obsolete, unapproved and non-interchangeable parts. The Specific Part Override area also indicates if the part is available locally.

Scheduling Action

When you add part requirements, you select one of the following scheduling actions:

Part requirement - scheduling actions

Scheduling Action	Description
REQ	A part request is created. Auto-reservation attempts to fulfill the request. If the part request cannot be fulfilled by auto-reservation, the part request is displayed on the material controller's Open Part Requests and Deferred Fault Part Requests tabs.
BENCH	A part request isn't created because bench stock is available.
INKIT	A part request isn't created because the part is available in a kit.
NOREQ	A part request isn't created. You might select this action when a part is provided by another organization such as an MRO.
ASREQ	A part request isn't created because a request for the part already exists. You might select this action when an ad hoc part request was created for an urgently needed part and you are now creating the task that will use the part.

Quantity

This field is editable for batch and serialized parts, but not for tracked parts, assemblies, or kits.

Reference (enhanced search/add requirement only)

To identify the required part, you can enter a reference based on the IPC, AMM, or SRM or other approved documentation on the Add Part Requirement page. This reference adds traceability for the requested part. The reference field is only visible if it is enabled for your organization. Depending how your organization configures this field, it can be mandatory for specific inventory classes and, or specific part request scheduling actions. For more information, see the *Operator Administration Guide*.

The format for the text entry is determined by your organization - the free text Reference field can accommodate 40 characters. Your organization might use a document code, figure code, and item code. For example:

- IPC: 53-19-69-01 FIG. 1 ITEM 110B
- AMM: 32-00-00-0701 PARA3 (2) A,B,C

You can add references to part requirements for ad hoc tasks and faults that are open or in work packages. To add a reference to a part requirement that was created from a task definition, you can edit the reference.

If you add a requirement for a part that's in a kit, the reference field is for the kit part number, not the individual parts in the kit. If you want to add a reference for a part in a kit, you can go to the Task Details page, Task Execution tab, and edit the Part Requirements.

Remove or Install

Select check boxes to indicate if the part number will be installed (IN) or removed (RN) or both.

When a TRK component is installed and there is a removal part requirement that corresponds to the installed part's config slot and position, the removal part requirement shows the serial number of the installed part. If the installed part is replaced, the serial number on any corresponding removal part requirements is updated on active and forecast tasks.

Related concepts

Part requests

Add part requirements to tasks or faults - barcode

As you work on a task or fault, you might need to add part requirements by entering or scanning the barcodes of associated inventory you have in hand.

Prerequisite

- The fault or task must be assigned to a work package that has Request Parts enabled and therefore been scheduled to a maintenance location. Also, the task or fault must not be historic, must not have the class MPC, and must not have the status FORECAST.

About this task

If your organization uses the Barcode Part Search for adding part requirements, use the following steps.

Steps

1. Find the task or fault.
2. Go to the **Task Details** or **Fault Details** page.
3. In the **Task Execution** tab, **Part Requirements** area, click the **Barcode Add Part Requirement** button.
4. On the **Barcode Add Part Requirement** page, in the **Inventory Barcode Search** field, scan or enter the barcode of the inventory and click **Search**.
5. Select a part and position (if applicable) from the **Part Group Search** dropdown.
6. In the **Scheduling** area, set **Quantity** and **Action** as required.
7. Click **Assign To Task**.

Result: A part requirement is created for the scanned inventory's part group. The serial number of the part is shown in the **Installed Part** section of the **Part Requirements** area of the **Task Execution** tab.

Note Validations are performed to ensure the barcode is valid and the inventory satisfies all the criteria and business rules for installation. Only inventory that successfully passes these validations can be added as part requirements. Informative errors are provided to the end user if the inventory fails these validations so that appropriate action can be taken.

Add part requirements to tasks or faults - enhanced

As you work on a task or fault, you might need to use or request parts that are not already specified as part requirements. To request parts for a task or fault that's in work, or soon to be in work, add one or more part requirements to the task or fault.

About this task

If your organization uses the enhanced part search for adding part requirements, use the following steps.

Tip On the Add Part Requirement page, if you see a search box that says 'Enter a part number or part name', this is the enhanced search.

Steps

1. Find the task or fault.

2. On the **Details** page, **Task Execution** tab, **Part Requirements** area, click the **Add Part Requirement** button.
3. (Optional) On the **Add Part Requirement** page, to show only applicable part groups for the assembly you're currently working on, select the **Show Applicable** check box.
4. (Optional) To search for a specific sequence of text or numbers, select the **Full Text Search** check box. For example, if you enter "ade" in the Search box, you see parts such as "fan blade," but not "bladder."
5. Start typing a part number or part name. When you see the part in the list, select it.

   Tip If there are sensitivities, for example, ETOPS, CAT III, and so forth, associated with the part group, clickable chips are displayed next to **Sensitivity**. You can click these chips to view more detailed information.

6. (Optional) To use an alternate part from the part group, expand the **Specific Part Override** area, then select the check box for the part you want. The **Local Available Qty** column indicates if the part is available locally or if it needs to be ordered from another location.

   Note Quantities are only displayed if the task/fault is in a scheduled work package. If the work package is not scheduled, "N/A" appears in the **Available Qty** column.

7. In the **Scheduling** area:
   a) If the **Quantity** field is editable, enter the number of parts you want.

      Note You cannot change the quantity of tracked parts, assemblies, or kits.

   b) If the **Reference** field is visible, you can enter a reference based on the IPC, AMM, or SRM or other approved documentation in the format that your organization uses, for example, IPC: 53-19-69-01 FIG. 1 ITEM 110B. (This field isn't visible if your organization doesn't use it.)

      Tip If a part is in a kit, you can enter a reference number for the kit part number, but not for a part that's in a kit. To add a reference for a part in a kit, go to the **Task Details** page, **Task Execution** tab, and edit the **Part Requirements**.

   c) Select the **Remove** and/or **Install** check box(es) to indicate if a part must be removed and/or installed.
   d) From the **Action** list, select the required action.

8. Click **Assign To Task** or to assign this part and search for another part, click **Assign To Task and Search Again**.

Add part requirements to tasks or faults - legacy

As you work on a task or fault, you might need to use or request parts that are not already specified as requirements. To request parts for a task or fault that's in work, or soon to be in work, add one or more part requirements to the task or fault.

Prerequisite

- If you want to request parts when you add the part requirement, the work package must be scheduled to a maintenance location and have a start date specified.

About this task

If your organization uses the legacy part search for adding part requirements, use the following steps.

> **Tip** On the Add Part Requirement page, if you see a search button with the word 'Search' on it, this is the legacy search.

You can add part requirements and request parts from the task details page, or from the details page of the work package that contains the task.

Steps

1. To find a work package, do one of the following:
   - In the **Barcode Search** field, enter the work package barcode, and press Enter.
   - On the **Task Search** page, in the **Work Package Information** area, provide the information requested and click Search.
   - On your to-do list, in the **Work Package** column of any tab, click a work package name.
2. To find a task, do one of the following:
   - In the **Barcode Search** field, scan or enter the barcode of the task, and press Enter.
   - On the **Task Search** page, enter your search criteria, and click Search.
   - On your to-do list, **My Tasks** tab, select the check box of the task.
3. To add a part requirement, do one of the following:
   - On the **Work Package Details** page, **Workscope** (or Assigned Tasks) tab, select a task.
   - On the **Task Details** page, **Task Execution** tab, click **Add Part Requirement** .
4. On the **Add Part Requirement** page, enter your search criteria, and click **Search**.
5. On the **Parts Found** list, select the check box for a part, and then provide the required information. Note the following:

- In the **Action** column, select an action. If you select **REQ**, a part request is created immediately.
- In the **Alternate Parts List**, specify the part number you want to request from the list of valid alternative parts. If you do not specify the part number, CAMO requests the standard part number in the part group.

6. Click **Assign To Task** or to assign this part and search for another part, click **Assign To Task and Search Again**.

> **Tip** If additional parts are required and are not listed, click Assign Selected Parts to Task, and then Search again. This assigns the selected parts, and returns you to the Add Part Requirement page. If the part is not related to the inventory of the task, you might get a warning message that you must acknowledge to proceed.

Results: Part requests are created for all part requirements you added to tasks. You can see the part requests on the Work Package Details page, Parts tab, and on the individual Task Detail pages, Task Execution tab.

Add part requirement using IPC document

About this task

The Add Part Requirement feature enables users to efficiently search for and select required parts using the **Illustrated Parts Catalog** (IPC) within IFS Cloud. This integration streamlines part selection, reducing manual entry and ensuring accuracy.

Steps

1. Go to the **Fault Details** page.
2. Locate and select the relevant fault from the **Open Faults** section.
3. Click on the Part Requirements Search Icon. You will be directed to the IFS Cloud interface, which displays the relevant part requirements.
4. Find the corresponding **IPC Document** related to the fault.
5. Identify the required **Part Number** in the IPC document. Click **Yes** to confirm the selection. You will be redirected back to the **Add Part Requirement** page.
6. **If a Part was Selected:** The Part Search Field is auto-filled with the selected part.
7. **If No Part was Selected:** Manually enter the required part details.

- The selected Part Number is automatically populated.
- Users can proceed with the part request process efficiently, ensuring accuracy and reducing input errors

Create a part and add it as a requirement for a task or fault

About this task

If a part does not exist in the system, you can create it and add it as a requirement.

Note: The Enhanced Part Search permission set must be enabled to use the enhanced search. Contact your CAMO administrator if you do not see the enhanced search features mentioned below.

Steps

1. Find the task or fault.
2. On the **Details** page, **Task Execution** tab, **Part Requirements** area, click the **Add Part Requirement** button.
3. In the **Part Search** field, enter a partial part name or part number until you see what you're looking for.
4. Click the part, and then click **Create and Assign Part to Task**.
5. Enter the new part details, and then click **OK**.

Add tool requirements to tasks or faults

About this task

You can add a list of required tools to a task or a fault. When you add a tool requirement, you select the part number of the tool from the tools and service equipment (TSE) assembly, and indicate the number of hours that the tool will be used.

Steps

1. Find the task or fault.
2. On the **Details** page, **Task Execution** tab, **Tool Requirements** area, click **Add Tool Requirement** .
3. On the **Add Tool Requirement** page, enter your search criteria and click **Search**.
4. From the search results, select one or more tools.
5. In the **Sched. Hours** column, enter the number of hours the tool will be used.
6. Click **Assign Selected Tools to Task**.

Add technical references to tasks or faults

About this task

You can add techical documents, such as the Maintenance Planning Document (MPD) or Aircraft Maintenance Manual (AMM), to a task or fault.

Steps

1. Find the task or fault.
2. On the **Details** page, **Task Information** tab, **Technical References** section, click **Add Technical Reference** .
3. On the **Add Technical Reference** page, enter a name in the **Name** field.
4. In the **Link** field, enter a reference number or Web address for the document.
5. Complete the remaining fields as required, and then click **OK**.

Add measurements to tasks or faults

You can add ad hoc measurements to tasks or faults. If you add the measurement before work is done, and do not include a value, then technicians record measurement values during work capture when they job stop or finish work. When you add an ad hoc measurement, you might see the option to add the measurement value. This is only done if you are recording work after the fact - though note that the edit work capture workflow provides better accountability.

Steps

1. Find the task or fault.
2. Go to the **Details** page, **Task Execution** tab.
3. In the **Measurements** area, click **Add Measurement** .
4. On the **Add Measurements** page, select the measurements you want.
   - Enter the search criteria to filter out the matching list of measurements for your task/fault requirements.
   - Click **Filter**.
   - Use the **Select Measurements** > and **Remove Measurements** < buttons to select/deselect and move measurements between the filtered measurements list (left tabular view) and the selected measurements list (right tabular view) as required.
   - Click **Add Measurements**.
5. Enter measurement values. You only add a value if the measurement was already taken and you are using these steps to record work done after the fact.

   Note In numeric measurement fields, you can enter only numbers or decimals. Further, any measurements marked as **Review required=TRUE** in the **Create Measurement** flow wil appear for review on the **Pending Reference Approval** page for approval by MOC.

6. Click **OK**.

Add labor requirements to tasks or faults

About this task

You can add a labor requirement to a task or fault and indicate:

- the labor skill.
- the estimated number of hours required to complete the work.
- if the technician must be certified.
- if the work must be inspected.
- the estimated number of hours required to complete the inspection.

Steps

1. Find the task or fault.
2. On the **Details** page, **Task Execution** tab, **Labor** area, click **Add Labor Requirement** .
3. On the **Add Labor Requirement** page, provide the requested information and click **OK**.

Edit labor requirements for a task or fault

About this task

After reviewing tasks or non-routines for which technicians requested engineering assistance, add the information to edit labor requirements for a task or fault.

Steps

1. On the Task or Fault Details page, **Task Execution** tab, **Labor** area, click **Edit Labor Requirements** .
2. On the **Edit Labor Requirements** page, for each labor skill:
   - If certification or inspection are required, under the **Certification or Independent Inspection** column, select the **Required** check box, and enter a number of hours.
   - If certification or inspection are not required, under the **Certification or Independent Inspection** column, clear the **Required** check box.
3. Click **OK**.

Add job card steps to tasks or faults

To provide instructions and record sign-off, you can manually add steps to tasks and faults. A task or fault might already have steps from job card definitions, executable requirements, or repair references, but you might need to add additional steps for work such as cleaning. In addition, you can add job card steps and skills within ad hoc tasks and ad hoc faults while maintaining an audit trail by enabling the relevant config parameters. See *Ad hoc tasks*.

About this task

Steps from task definitions and repair references are grouped together and can't be edited, moved, or reordered. You can edit, remove, or reorder manually added steps.

Steps

1. Go to the Task Details or Fault Details page.
2. On the **Task Execution** tab, in the **Steps** area, click the **Add Step** button.
3. On the **Add Step** page, enter a description of the step the technician must take and click **OK**.
4. (Optional) To remove an ad hoc step, on the **Task Execution** tab, in the **Steps** area, click **Remove Step**.
5. (Optional) To reorder steps, in the **Steps** area, click the **Edit Step Order** button.

Add instructions to tasks or faults

About this task

You can add special instructions for technicians to tasks or faults.

Steps

1. Find the task or fault.
2. On the Task or Fault Details page, **Task Information** tab, **Instructions** area, click **Edit Instructions**.
3. On the **Edit Instructions** page, enter instructions for technicians to follow to resolve the task or fault.
4. Click **OK**.

Add attachments to tasks or faults

About this task

You can attach reference documents to a task or fault to be used by the technicians in carrying our their work.

Steps

1. Find the task or fault.
2. On the Task or Fault Details page, **Task Information** tab, Attachments area, click Add Attachment .
3. On the **Add Attachment** page, in the **Attachment** area, drag and drop the file or click to select the file on your computer.
4. Enter the requested information and click **OK**, or to add another attachment, click **OK and Repeat**.

Specify zones and panels for a task or fault

About this task

You can specify in a task or fault which zones and panels of an aircraft require repair.

Steps

1. Find the task or fault.
2. On the Task or Fault Details page, **Task Information** tab, **Zones** area, click **Add Zone**.
3. On the **Add Zone** page, select one or more zones and click **OK**.
4. On the **Task Details** page, click the **Task Information** tab.
5. In the **Panels** area, click **Add Panel**.
6. On the **Select Panel** page, search for the panel.
7. Select one or more panels.
8. Click **OK**.

Recording work on tasks and faults

Task and faults have separate labor rows for each required skill and can also include steps. You record the start, stop, and completion of labor rows and update step or step skill status in CAMO to sign off on work and to keep planners up to date.

On the Task or Fault Details page, Task Execution tab, before a labor row is started, it has a status of ACTV. When you record your work, you select the labor row for your skill. You can start, job stop if the work is partially complete, or finish if work is complete. If there are steps on the task, then for each job card step that you worked on or identified as not applicable, you select a step status. If the steps have skills, then instead of setting the status for the step, you set the step skill status for your skill. You only see step skills on steps that are based on requirements (not on steps that are manually added). If you need to correct work that you recorded, you can edit the work capture.

When you record work on the Work Capture page, the fields you see and the information you enter varies depending on the type of work you're doing. For example, if you are recording an inspection for a task without any parts to remove or install, you won't see fields for specifying what parts were removed and installed.

If the task is a fault deferral or repair, if there is a reference selected and it has follow-on tasks, these are displayed for your review.

Signing off work

Depending on the configuration of CAMO within your organization, you can use one of the following sign-off mechanisms:

- In organizations using printed job cards, work sign-off requires signing the job card(s) and handing them over to the supervisor.
- Organizations using online sign-off can require one or both of the following:
  - Sign-off using an CAMO login password.
  - Sign-off using electronic signatures. When electronic signatures are enabled, each user who needs to sign off work or aircraft release documents must generate their electronic signature certificates before they can proceed. For more information, see the CAMO Administration Guide .

Electronic signatures

If electronic signatures are used, the information entered during work capture, along with other task and work package information, is used to generate a PDF for electronic signature. The mechanic or person signing off verifies that the information is correct and signs the document by entering an electronic signature password. You can view signed PDFs in the Doc column on the Task Execution tab.

Because the start and end times on the work capture page can be configured to show either the current system time or the scheduled start and end times for the task, the signature time stamp recorded on the bottom of the job card can be different from the current system time stamp recorded on the steps and actions. For more information see the CAMO Administration Guide.

The following events do not trigger an electronic signature:

- Changes to engineering records
- Deadline extensions
- Task cancellations
- Task and fault assignments to committed work packages
- Task and fault unassignments from committed work packages
- Faults marked as No Fault Found
- Changes to aircraft configuration
- Fault deferrals if DEFER_ON_APPROVAL is true

Start a labor row

Starting a labor row, starts the clock on the hours that are scheduled for the row and changes the status for the row from ACTV to IN WORK. Starting a labor row isn't mandatory. You can job stop or finish a row that you didn't start and enter all the required information, but in heavy execution, planners have better visibility into time remaining, when the work start is recorded.

Job stops

You job stop labor rows in CAMO when you stop work on a task before the task is finished, or to complete the fault deferral process. You might job stop because your shift is over or because you don't have the tools or parts that you need to continue. Recording the job stop keeps planners accurately informed so they can re-plan and supports effective hand-over of work to the next shift. Crew leads can job stop on behalf of technicians on the Task Supervision tab.

Depending on the setting for the JOB_STOP_REMAINING_HOURS configuration parameter, you might need to enter only your start and stop times or you might need to verify or enter the Remaining Hours. For configuration information, see the CAMO Administration Guide.

If the remaining hours is calculated and visible, you can edit the value. If you edit Actual Hours, the Remaining Hours value is recalculated. If you edit Remaining Hours, the Actual Hours value is not recalculated.

If you are required to enter a remaining hours value (the field cannot be blank or 0:00), you can enter the time in hours and minutes or as a decimal value - the time is displayed in hours and minutes. You can enter more than two digits before or after a colon (7 characters in total). For example, if you enter 123:70, this represents 124 hours and 10 minutes.

When you job stop a labor row, a new labor row with the same skill is created with a task status of ACTV. The scheduled hours for the new labor row is the Remaining Hours value from the job stopped labor row. The crew lead can assign the new row to another technician if necessary.

Job stopping to defer faults

In line maintenance, typically a fault has one ACTV labor row that isn't started prior to job stopping. If there are multiple IN WORK labor rows, the fault isn't deferred until the last remaining IN WORK row is job stopped.

If you job stop a labor row that was not started and if the remaining hours is visible and calculated, the value is 0:01.

Finishing labor rows

A task is completed automatically once all labor requirements are finished, certified, and inspected where necessary.

Editing work captured

You can add or adjust some of the details you recorded about the work you completed on a task, for example, if you want to add more information to the corrective actions you did to address a fault.

If you edit a labor row that requires certification, the work must be recertified before the labor row can be completed.

If you are using electronic signatures, editing a work capture creates a new document that contains the updated information, for signature. Pre-existing work capture documents that were signed are outdated, but you can view these in the Doc column on the Task Execution tab. The newest document is at the top and is marked [Edit].

Corrective action sign-off on faults

Corrective action can be made mandatory for all labor sign-offs on historic and non-historic faults. This is applicable to the following workflows:

- Job stopping
- Finishing labor rows
- Editing work captured

Here, corrective action is enforced only on a fault and not on the sub-tasks of a fault. Corrective action is not enforced on any non-fault class of task.

Corrective action at sign off on faults may also be configured so that:

- At least one corrective action must exist prior to completing the fault. This is not applicable for historic labor rows. In this configuration, corrective action on the subtask of a fault fulfills the corrective action of the fault.
- Corrective action is not enforced when signing off on a fault's labor row.

> **Note** Contact your CAMO administrator if you need to change the configuration.

Mandatory reason and notes for actions on task and fault

You are required to enter a reason and notes for the Cancel Task/Fault, Terminate Task, and Mark Task/Fault as Error workflows, if your administrator has configured these fields to be mandatory. Furthermore, you are required to enter a reason and notes for the **Unassign Task**, **Unassign Fault**, and **Unzip Requirement** (single or batch) workflows, if you have the appropriate permission and your administrator has configured these fields to be mandatory.

> **Note** Contact your CAMO administrator if you need to change the configuration.

Related concepts

Step skills on tasks and faults
Task certification and inspection
Deferring faults
Task supervision

Related tasks

Change job step applicability
Job stop on behalf of a technician

Start work on tasks

Start a task by starting a labor row that is in the task. The labor row identifies a skill needed to complete some or all of the work.

Prerequisite

- The work package containing the task is started.

Steps

1. Find a task by doing one of the following:
   - In the **Barcode Search** field, scan or enter the barcode of the task, and press **Enter**.
   - On the **Task Search** page, enter your search criteria, and click **Search**.
   - On your to-do list, **My Tasks** tab, select the check box of the task.
2. Depending on the page shown on the screen, do one of the following:
   - On the **Task Details** page, **Task Execution** tab, under **Labor**, select a labor row.
   - On the **My Tasks** tab, select a task.
3. Click **Start**.
4. If prompted, enter your password and click **OK**. The task status changes to In Work.

When you finish your work on the task, or stop working on it before it is completed, for example, because of a shift change, you record the stoppage in CAMO, and record the details of the work you have done.

Installations and removals

As tasks are performed to install and remove components, technicians, or technical records roles, record information in CAMO. The information that you enter during work capture triggers checks against the configuration rules, updates technical records, and passes information to materials management and planning processes.

Here are a few notes on differences between installs and removals for different classes of inventory:

- Assemblies and tracked components are installed into "holes" in the configuration slot hierarchy of the parent. Although serialized inventory is installed, the location on the parent or aircraft is not recorded. Therefore, history notes of the the configuration change - installation or removal - are only recorded in the technical records of assemblies and tracked components.
- Tasks include part requirements to install and remove batch inventory, but batch-controlled inventory isn't tracked after it's issued - there's no inventory record for the individual batch

component that was installed or removed. However, batch parts can be marked as repairable. In this case, when a repairable batch component is removed, CAMO automatically creates new inventory with a unique batch number and issues the inventory. The removal reason determines the condition of the new inventory and it is routed accordingly. For example, a component in REPREQ condition is routed to unserviceable staging.

Removal reason

When you remove a component and specify the removal reason, this determines the inventory condition and dictates the future of the removed item. For example, removed items can be repaired, overhauled, scrapped, sold, or stored for reinstallation at a later date. The list of removal reasons that you see in work capture is configured by your organization, but out-of-the box, CAMO includes the following removal reasons and correlated inventory conditions:

Removal reason	Inventory condition
Access - removed for access	RFI
Unsched - unscheduled removal	REPREQ
Rob - rob serviceable component	RFI
Vendret - return to vendor	RFI
Stagger - removed serviceable component for stagger	RFI
Imschd - unscheduled failure	REPREQ

Finish or stop work on a task or fault

When you stop work on a task, you record the details about the work on the Work Capture page in CAMO. You record work that is finished, but you also record the partial completion of a task such as when your shift is over.

About this task

This procedure describes the steps for recording different types of work. You might not see all of the fields described because CAMO only shows you the fields that apply to the labor row you are recording work for.

Steps

1. To find a task, do one of the following:
   - In the **Barcode Search** field, scan or enter the barcode of the task, and press Enter.
   - On the **Task Search** page, enter your search criteria, and click **Search**.
   - On your to-do list, **My Tasks** tab, select the check box of the task.

2. On the Task or Fault Details page, **Task Execution** tab, **Labor** area, in the labor row, do one of the following:
   - If you have not completed the task, click **Job Stop**.
   - If you have completed the task, click **Finish**.
3. If prompted, enter your password and click **OK**.
4. For Job Stops only: on the **Work Capture** page, in the **Job Stop** area, provide the information requested.
   a) If the **Remaining Hours** field is visible and blank, enter a value that is not 0:00. If a value is displayed, you can optionally edit the value.

      Note You can enter the time in hours and minutes or as a decimal value.

   b) (Optional) If you will resume work on the task, select **Assign me to the new labor requirement**.
5. In the **Labor** area, enter the number of hours spent on the task, the time you started the work, and the time you stopped or finished the work.

   Note If CAMO is configured to automatically record the start time, end time, and hours spent on the task, you cannot enter this information yourself. Go to the next step.

6. In the **Actions** area, if the reference is not already displayed, enter it.
7. In the **Action** box, type text describing the actions you performed or select one or more phrases from the **Predefined Actions** list.

   Tip You can combine manually entered text with a selection from the list and if you select a predefined action, you can edit it in the Action box.

8. In the **Fault Information** area, **Resolution Config Slot** area, start typing the name of the ATA code of the config slot on which the issue was resolved (if the fault was resolved on a different ATA chapter than what was initially reported).
9. If you are also certifying the task, in the **Notes** area, click the check box next to **Certify Work Performed**.

   Note CAMO can be configured to check the Certify Work Performed check box by default.

10. In the **Steps** area, do one or more of the following:
    - If all job card steps are complete, click **Complete All**.

- For each job card step that you worked on or identified as not applicable, select a status of complete, partially complete, non-applicable, or pending, then enter any relevant information in the text box. You must enter information in the text box if you select a status of partial or N/A.
- If the job card steps have skills assigned, select the appropriate status of the skill. A note is mandatory when Partial or N/A status is selected.

11. In the **Parts Removed / Installed** area, provide the requested information as follows:
    - Under **Removed Part**:
        - Select the check box for the parts you removed from the aircraft or component.
        - Specify the reason for removing the part.
    - Under **Installed Part**:
        - Select the check box for the parts you installed on the aircraft or component.
        - If you installed a part whose part number is not the one shown—you installed an alternate part—select the correct one from the Part No list.

          Trouble? If the part number you installed is not listed, contact your engineering or technical records department.
        - Enter the serial number or batch number of the parts you installed.
12. In the **Measurements** area, for the measurements you took, select their check boxes, and enter measurement values. In numeric measurement fields you can enter only numbers and decimals.

    Note CAMO can be configured to require mandatory non-null values for measurements. CAMO can be further configured to display a N/A check box which provides a way for the technician to indicate that a (mandatory) measurement is not applicable, impossible to take or is otherwise undefined. When a measurement is marked as N/A a reason note is mandatory.

13. In the **Tools** area, for each tool that you used, select its check box, then enter its serial number and the number of hours you used the tool.

If there are discrepancies between the part serial numbers you entered and those in CAMO records, you see a message describing the issue. If you stopped the task without the work being completed, the task status changes to PAUSED and a new labor row is added to the task for completing the work. If you finished your work, and all other labor rows are also finished, the task status changes to COMPLETE, unless the task requires certification or inspection, in which case it remains IN WORK.

Related concepts

Task supervision

Step skills on tasks and faults

Engineers add skills to job card steps so that you can certify work by skill for one or more steps in a labor row.

To sign for step skills on the Work Capture page, the labor row you are job stopping or finishing must be one that requires certification. Only labor rows that require certification, can have steps with step skills. If you are signing for the independent inspection skill, ensure that you select a labor row that requires independent inspection.

When you capture work for job card steps with skills, you change the status of skills in one or more steps that correspond to the labor row you're stopping or finishing. For example, if the labor row is for the AMT skill, then on the Work Capture page, you can change the AMT step skill status on any of the steps. You can complete the same skill in all steps by using the Complete All {xx} Step Skills button. The name on the button changes to match the skill of the labor row you are finishing. However, to activate this button, the **ACTION_COMPLETE_ALL_STEPS** configuration parameter must be enabled to grant permission to complete these steps in bulk.

If you are finishing (not stopping) the final labor row for a particular skill, all of the corresponding job card step skills must be Complete or N/A.

You can select one of the following step skill statuses when you sign for step skills:

Step skill statuses

Status	Description
Pending	None of the work for this skill is complete. Status Note: Optional. You can enter a note, even if you haven't performed any work on the step.
Partial	Some of the work is complete. Status Note: Mandatory.
Complete	All work for the skill on this step is complete. Status Note: Optional.
Mark Step as Not Applicable	The work described in the step is not applicable. Selecting this status changes the status of the step to Not Applicable. Status Note: Mandatory.

Technicians can sign off on multiple skills (from different labor rows) for job card steps when the configuration parameter ENABLE_MULTIPLE_SKILLS_SIGN_OFF_ON_SAME_STEP is set to True. By default, this is set to False.

Finish or stop work on tasks with step skills

On the Work Capture page, if there are steps with skills, then you provide additional work capture information. For the skill in the labor row you are stopping or finishing, you change the step skill status.

About this task

This topic describes job cards that have step skills added to the task definition. For job cards with no step skills added, see *Finish or stop work on a task or fault*.

Steps

1. Go to the **Task Details** page, **Task Execution** tab.
2. In the **Labor** area, on a labor row that's assigned to you, do one of the following:
   - If the work for your labor row is not complete, click **Job Stop**.
   - If the work for your labor row is complete, click **Finish**.

   If more than one labor row is assigned to you, ensure that you select the row with the correct skill, certification and Independent Inspection requirement for the work you are recording.
3. If prompted, enter your password and click **OK**.
4. On the **Work Capture** page, in the **Job Stop** and **Labor** areas provide the requested information.
5. In the **Steps** area do one of the following:
   - For a step, select a status from the **Step Skill Status** list. If you select a status of Partial or Mark Step as Not Applicable, you must add a Status Note.
   - To complete the same skill in all steps, click **Complete All {XX} Step Skills**.

   > **Note** The skill that is displayed on the Complete All {xx} Step Skills button, is the skill for the labor row you are finishing.

6. Click **OK**.

The labor row is complete. If necessary, you can edit the Work Capture, however, you can only edit the step skill status if the task status is active. You can't edit the status of step skills on tasks that are complete.

Change job step applicability

You can mark job card steps as applicable or not applicable. A button on the Task Details page allows you to change job step applicability when there are job card steps in an active task. This helps planners review tasks for the next day.

Prerequisite

- The work package is committed or started.

Steps

1. Go to the Task or Fault Details page, **Execution** tab of a task or fault.
2. In the **Steps** area and click **Mark as Applicable** or **Mark as Not Applicable**.
3. On the **Job Step Applicability > Change Applicability** page, enter the reason for your change in the **Notes** field (mandatory).
4. Click **Mark as Applicable** or **Mark as Not Applicable**.
   On the Details page, the job card step status is changed and the Signed By (Status) column displays a record of your change, including your name, the time stamp, and your note. All initialized labor skills' status changes to N/A when the step is marked as not applicable or to Pending when the step is marked as applicable.

Task certification and inspection

To ensure that work is done properly, technicians and inspectors certify and inspect work. For each labor row in a task, you record who performed the work and if applicable, who certified and inspected the work for the row. Depending on what inspections are mandated by manufacturers and regulatory authorities, and on the processes your organization uses to ensure quality work, separate labor rows under tasks may be added for additional inspections.

After technicians perform their work, the quality of the work can be verified and recorded with the following levels of checks:

Certification

- Senior technicians check and certify the work of junior technicians before the work is inspected.
- Senior technicians often certify their own work.

Independent Inspection

- An inspector records a pass or reject result for a labor row. If the work does not pass inspection, the inspector identifies the reason for the rejection, and a new labor row is created to complete the required work.
- An inspector cannot be the same person that certifies the labor row.

RII (Independent Inspection Required)

- RII inspections are mandated by manufacturers or regulatory bodies, typically for work that could impact flight controls, control surfaces, or other key systems.
- An RII-qualified inspector inspects the work done for a labor row or for the whole task. A separate labor row under the task may be dedicated to the inspection activity. These rows may be added to task definitions by engineers or to actual tasks on an as-required basis.

For more information, see,

- *Certify completed work on tasks*.
- *Inspect work completed on tasks*.

Certify completed work on tasks

When you are certifying work that is completed on tasks—usually by someone else, verify that the work was done, and certify it in CAMO before the labor row(s) are complete.

Steps

1. Go to the Task or Fault Details page, **Task Execution** tab.
2. Select a labor row.
3. Click **Review Work Captured**.

   In the **Review Work Captured** page, verify the information as needed and click **Close**.
4. Click **Certify**.
5. If prompted, enter your password and click **OK**.
6. On the **Certify Work** page, provide the required information. Note the following:
   - If you want to add quick text, in the **Notes** area, select an option from the **Predefined Actions** list, and then edit the text in the **Action** field (if required).
   - **Independent Inspection Required**: If the work done for the labor row does not currently require an additional inspection, but you feel one is required, select the check box.

   Note If step skills are added to the job card, at this point, you cannot change the step skill status. If you want to do so, you must leave the Certify Task page, and edit the Work Capture page before certifying the task.
7. Click **OK**.

Inspect work completed on tasks

If one or more labor rows in a task require independent inspection, an inspector must complete the inspection and record it in CAMO before the labor row is complete.

Prerequisite

If you certified the work for a labor row, another person must do the independent inspection for that row.

Steps

1. Go to the Task or Fault Details page, **Task Execution** tab.
2. Select a labor row and then click **Review Work Captured**.
3. On the **Review Work Captured** page, verify the information as needed and click **Close**.
4. On the **Task Execution** tab, select the labor row, and click **Record Inspection**.
5. If prompted, enter your password and click OK.

6. On the **Record Inspection** page, provide the information requested, and then do one of the following:
   - Select **Pass** and click OK.
   - Select **Reject** and enter information in the Action box such as why work was rejected and what must be done to pass the inspection. Then click OK.
7. (Optional) If you want to add quick text to the **Notes** area, select an option from the **Predefined Actions** list and then edit the text in the **Action** field (if necessary).

The Details page is updated with the inspection results. If the inspection result was Reject, a copy of the rejected labor row is added to the page.

Correct the details recorded for work done on tasks and faults

To add or adjust the details you recorded about the work you completed on a task or fault, you edit the work capture. For example, you might want to add more information to the corrective actions you did to address a fault.

About this task

If you edit the work capture for a labor row, the record is updated only for the row you are editing, not for rows that were created before or after on the task. For example, you job stop a labor row on a task then next day you finish the new labor row that was created to continue the work. Then you realize you want to add information to the job stopped labor row and you edit that work capture. An existing work capture for a row that you finish later does not show the changes you made on the job stopped row.

You can only edit the step skill status if the task status is active. You can't edit the status of step skills on tasks that are complete.

If you uncheck the previously selected tools during an Edit Work Capture, the tool capture signatures will not be retained. A previously selected checkbox indicates that there is a tool capture for that tool requirement. If you uncheck the checkbox, you would be indicating that there is no tool capture and that the tool capture was incorrectly entered previously.

Steps

1. Go to the Task or Fault Details page.
2. On the **Task Execution** tab, in the appropriate labor row, click **Edit Work Capture**.
3. If prompted, enter your password, and click **OK**.
4. On the **Edit Work Capture** page, provide the required information. Note the following:

> **Tip** The last, saved change on the work capture for the selected labor row is highlighted in yellow.

   - **Description**: Enter a description for the task.

- **Action**: Provide the details of the work you did.
- **Part Requirements**: Provide the part requirements for this task.
- **Measurements**: Provide the measurements related to this task.
- **Tool Requirements**: Provide the tool requirements for this task.
- **Found Faults**: Raise logbook faults for this task.
- **Subtasks**: Add subtasks for this task.
- **Steps**: Provide step details for this task.

5. Click **OK**.

What's next

If the labor row that you edited requires certification, it must be recertified after editing for the labor row to be complete.

Batch complete tasks

In an In Work work package, to complete multiple tasks at the same time, you can batch complete all tasks in the work package, or select the tasks you want to complete and batch complete only those.

About this task

The first time you try to batch complete tasks, you might get errors. After batch completion runs, preview the release, resolve any errors and rerun batch completion. After all tasks are completed, you can complete the work package.

Steps

1. Find the work package by doing one of the following:
   - In the **Barcode Search** field, enter the work package barcode, and press Enter.
   - On the **Task Search** page, in the **Work Package Information** area, provide the information requested and click **Search**.
   - On your to-do list, in the **Work Package** column of any tab, click a work package name.
2. Do one of the following:
   - To complete all the tasks in the work package, on the **Work Package Details** page, click **Batch Complete All Tasks**. OR
   - To complete selected tasks, on the **Work Package Details** page, **Workscope** tab or **Assigned Tasks** tab, select one or more tasks, then click **Batch Complete Tasks**.
3. On the **Complete Tasks** page, **Work Package Actual Start Date** and **Work Package Estimated End Date** will be pre-populated. Ensure they are correct, then enter the completion date and click **OK**.

Important When using batch complete, the batch complete date may not be earlier than the work package start date.

4. If prompted, enter your password and click **OK**.

Note The progress bar indicates when processing is done.

5. When batch completion processing is done, to see batch completion errors, click **Preview Release**.
6. For each task listed in the **Batch Completion Errors** area, review the error information, click the task link, and provide the missing information.

   Batch complete does not work on tasks that are not properly filled out. Ensure all mandatory fields are completed.
7. Rerun batch completion until there are no more errors.
   Rerunning batch completion and checking the Preview Release page provides the status of the batch completion process, but you also receive an alert when when batch completion fails or is successful.

Related concepts

Completing work packages

Terminate recurring tasks

When a recurring task is no longer required, you terminate the task so that it is no longer reinitialized.

About this task

Important Do not use **Terminate Task** when indicating you have finished work on a task. For this, see *Finish or stop work on a task or fault*.

Steps

On the **Task Details** page, click **Terminate Task**.

Handling work completed on the wrong task

If a technician or other role accidentally completes the wrong task and the work has to be redone, you can mark the task as completed in error and add another instance of the task to the work package. Only complete or canceled tasks can be marked as errors.

Tasks are created based on executable requirements, requirements with one or more job cards (JICs), or can be created ad hoc. The following table outlines how you handle marking a task as completed in error in various scenarios where your intent is to complete a new version of the task in the same work package. After you mark the task, you'll need to communicate the issue and involve others such as crew leads or production planners in the next steps.

Also be aware that if an ACTV requirement (that isn't on-condition) is unassigned from a work package, baseline synchronization recreates any of the requirement's JICs that were completed or marked as error - all of the labor rows and steps are newly created and need to be completed and signed. This default behavior is controlled with the UNASSIGN_RECREATE_JIC configuration parameter.

The scenarios below refer to marking parent requirements, JICs, or tasks as errors. If you're a technician, looking at a Task Details page, you are likely looking at a job card, executable requirement, or ad hoc task. To get to the parent requirement from this page, go to the Task Information tab, Subtask Of link. If you are able to view the Assigned Tasks tab, you can more easily see parent requirements with their JIC sub-tasks.

If you mark a requirement as an error, its status and the status of any JIC sub-tasks changes to ERROR. If you mark a JIC as an error, its status changes to ERROR, but the status of its parent requirement does not change.

Mark task as error variations

Scenario	What to mark as error	Result and next steps
A recurring requirement has only one JIC sub-task. The JIC is completed accidentally. Requirement status: COMPLETE Next instance of the requirement is ACTV outside work package	The JIC's parent requirement	• Requirement and JIC have ERROR status. • Baseline synchronization links the next ACTV instance of the requirement to the previously COMPLETE instance (the ERROR instance is dropped from the previous-next chain). The start values on the next ACTV instance are updated based on the ending values of the previously COMPLETE instance. • Go to the Work Package's Unassigned, Unassigned Tasks tab and add the requirement to the work package.

Scenario	What to mark as error	Result and next steps
A one-time requirement has only one JIC. The JIC is completed accidentally. Requirement status: COMPLETE	The JIC's parent requirement	• Requirement and JIC have ERROR status. • Baseline synchronization re-creates the requirement and the requirement's JICs. The scheduling is the same as the task marked in error. • Go to the Work Package's Unassigned, Unassigned Tasks tab and add the requirement to the work package.
A requirement has multiple JICs, some JICS are complete and some are ACTV. One JIC is completed accidentally. Requirement status: ACTV	The JIC (task)	• The JIC has ERROR status. • Unassign the requirement from the work package. Baseline synchronization recreates any JICs that had a COMPLETE or ERROR status. • Go to the Work Package's Unassigned, Unassigned Tasks tab and add the requirement to the work package. • For any complete JICs that were recreated, but that you have already done the work, cancel the JICs.
A requirement created on-condition has one JIC completed accidentally. Requirement status: COMPLETE	The JIC's parent requirement	• The requirement has ERROR status. • Initialize the requirement manually. • Go to the Work Package's Unassigned, Unassigned Tasks tab and add the requirement to the work package. • You now have the requirement marked as an error and the recreated requirement in the work package.

Scenario	What to mark as error	Result and next steps
An executable requirement has no JIC sub-tasks and is completed accidentally. Requirement status: COMPLETE	The requirement (task)	• Requirement has ERROR status. • Baseline synchronization re-creates the requirement. The scheduling is the same as the task marked in error. • Go to the Work Package's Unassigned, Unassigned Tasks tab and add the requirement to the work package. • You now have the requirement marked as an error and the recreated requirement in the work package.
An ad-hoc task, not based on a task definition, is completed accidentally. Task status: COMPLETE	The task	• The task status changes to ERROR. • Re-create the task.
A fault is accidentally completed. Task status: COMPLETE	The task	• The task status changes to ERROR. • Re-create the fault. • Note: if a fault is raised against an aircraft system and a component is removed as part of the corrective action, the corrective task status for the fault on both the aircraft and the one copied to the component is ACTV. If afterwards, the corrective task on the aircraft is marked as ERROR, the corrective task on the component is not updated and remains ACTV. You need to find the component fault and handle it.

A task that's marked in error, unassigned, and recreated, might be overdue as soon as it's created. This is especially true if the error is caught after a work package is closed.

Related tasks

Mark a task or fault as an error

Mark a task or fault as an error

If you complete the wrong task or fault by mistake and need to redo the work on a completed or canceled task, you can mark the task or fault as an error.

Prerequisite

Read about handling work completed on the wrong task. Find your scenario so you know whether to mark a task or its parent requirement as an error.

Steps

1. Go to one of the following pages:
   - Work Package Details, Assigned Tasks tab
   - Task or Fault Details page
   - Inventory Details, Historical tab, Fault or Task sub-tab
2. If you're on the Work Package Details or Inventory Details, select the appropriate task, job card, or parent requirement.
3. Click either:
   - **Mark Task As Error**
   - **Mark Fault As Error**
4. Enter a note about the error and click **OK**.
5. If you marked a non-recurring requirement as an error, verify whether it was created from an on-condition task definition: Go to the requirement's **Task Details** page, **Task Information** tab, and click the **Task Definition** link. In the **Planning Details** area, note whether the **On Condition** check box is selected.

   Note To verify whether a requirement is recurring, open the requirement's Task Definition link > Scheduling tab and see if the Recurring check box is selected.

What's next

Read about handling work completed on the wrong task. Find your scenario so you know the next steps.

Related concepts

Handling work completed on the wrong task

Display of labor skill for MPC tasks

When capturing or editing work against a labor requirement of a Master Panel Card (MPC) task, the information displayed for previous panel captures includes the labor skill that was used when

each panel work was captured. The same labor skill information is also displayed on the Review Work Captured page. The Signed By list shows all panel work captures in chronological order.

Oil consumption monitoring

The oil consumption rate is the amount of oil uptake per unit of operating hour. CAMO can calculate the oil consumption rate for inventory, and assign an oil consumption status value to the inventory. Maintenance control personnel can use this status to detect inventory that is exceeding normal oil consumption, and then plan maintenance activities accordingly.

CAMO calculates the oil consumption rate exclusively for assemblies that have the assembly class of engine (ENG) or auxiliary power unit (APU). The oil consumption calculation is based on a measurement parameter and a usage parameter. In the following example, the measurement parameter is the engine oil uptake in quarts, and the usage parameter is the engine operating hours.

Oil consumption rate = oil uptake / operating hours since last oil uptake.

Using the oil consumption rate and the threshold values you set for an assembly, CAMO assigns an oil consumption status to each inventory item matching the assembly. The oil consumption status value of normal is predefined in CAMO. Your organization can define additional oil consumption status values, such as caution and warning, by adding them to the Maintenix database. Authorized users then set the threshold values—the oil consumption rate value at which CAMO must change the oil consumption status of the inventory.

For example, if you consider the oil consumption rate of one quart per hour as normal, you can define statuses of caution and warning for oil consumption rates exceeding two quarts per hour and three quarts per hour, respectively.

In addition to threshold values set on the assembly itself, you can set alternative threshold values — exceptions to the threshold values set on the assembly—for specific part numbers, operators, and serial numbers. The different threshold values created for an assembly override each other in the following order:

1. Assembly thresholds apply to all inventory defined under the assembly.
2. Part number specific thresholds—if defined—override the assembly thresholds for the specified part number.
3. Operator specific thresholds—if defined—override the assembly thresholds and the part number specific thresholds (if they exist) for the inventory owned by the specified operator.
4. Serial number specific thresholds—if defined—override all other thresholds for the specified serial number.

As an inventory item accrues usage and its oil uptake measurements are recorded, CAMO calculates the oil consumption rate, and updates the oil consumption status as required. CAMO can also send alerts to notify users about the status change.

CAMO provides the High Oil Consumption To Do List tab, which lists the inventory items whose oil consumption status is not normal. You can filter the list to show only the high oil consumption inventory of a specific assembly, assembly class (ENG, APU, or both), part number, operator, oil consumption status, or any combination thereof.

Authorized users can manually escalate the oil consumption status of an inventory item, to add it to the watch list shown on the High Oil Consumption To Do List tab. Status escalation does not have to follow the sequence of status values. For example, the status of an item can go directly from normal to warning. When manual escalation is used, the automatic status update feature of CAMO cannot downgrade the status for that inventory. However, it can further escalate the status, should a new oil consumption measurement warrant it. When it is deemed appropriate, for example after taking action to correct the situation, authorized users can reset the automatic status update feature on that inventory record, which makes it possible for CAMO to downgrade the status.

You integrate oil consumption monitoring into your maintenance programs as follows:

1. Verify that your CAMO administrator has completed the data setup explained in the "Oil consumption logging" section of the *CAMO Administration Guide*.
2. Create the measurement parameter to use to measure the oil uptake. This measurement parameter must be defined as an assembly measurement for either the ENG or APU assembly class.
3. For each assembly to be monitored for oil consumption, such as engines and APUs, do the following:
   - Assign the usage parameter you want to use in the oil consumption calculation to a usage definition on the assembly. The usage parameter must be one that represents operating time, for example flying hours.
   - Create the oil consumption rate definition for the assemblies. This consists of the following:
     - Selecting the measurement parameter to use to measure oil uptake, and the operating time-based usage parameter.
     - Specifying the threshold values for the assembly.
     - Optionally, specifying part number specific, operator specific, and serial number specific threshold values.
4. Create task definitions on the aircraft itself to represent the work technicians will perform and for which they will record the oil uptake value. These can be requirement definitions with a job card to record the measurement, or executable requirements.
5. Assign the assembly measurements to be used for oil consumption tracking to the task definitions you have defined.

The current oil consumption status of an inventory is displayed on the Inventory Details page, Details tab. The oil consumption status transitions are displayed on the Inventory Details page, Historical > Oil Status tab.

Oil consumption, tasks, and work packages

After you have successfully recorded oil uptake, one of the following occurs:

- CAMO completes an ad hoc task in an existing in-work work package.
- CAMO completes a work package called "Oil Uptake Recording" with a completed ad hoc task in it.

More specifically, note the following:

- If an in-work work package exists for the assembly you're working on, CAMO adds a completed task to the work package; the work package remains in-work.
- If one or more work packages exists, CAMO adds the completed task to the work package that is scheduled to finish first.
- If an in-work work package does not exist, CAMO creates a new work package, adds a completed task to it, and then completes the work package.

Notes and limitations

- CAMO assumes that the amount of oil added is the same as the amount of oil consumed.
- When multiple work packages—during which oil consumption is recorded—are completed in between the times usage measurements are recorded, some oil uptake measurements are not associated with a usage delta. In such cases, CAMO calculates the oil consumption rate using the latest non-zero usage delta, as illustrated in the following example:

Time	Oil uptake (L)	Usage delta (H)	Calculated consumption rate
7:00	2	4	0.50 litres per hour (2/4)
9:30	1	0	.075 litres per hour (3/4)
9:40	1	0	1.00 litres per hour (4/4)

- The External Maintenance API (EMA) does not support the oil consumption measurements.
- When usage corrections are made to the engine or APU at operating time, CAMO does not automatically update the oil consumption status.
- Since the table is a rate calculation, it needs two data points to create a record. If the engine was recently installed on the aircraft, the first oil measurement is the first point needed, but this record will not cause a new entry in the rate table. The engine receives its first record in this table on the second measurement.

- Only non-zero oil measurements are used to create a rate. The rate is calculated based as oil usage /time between this rate and the last non-zero measurement.

Record oil consumption

You can record oil consumption on assemblies that have a class of engine (ENG) or auxiliary power unit (APU). Previous assembly measurements are also displayed when you select an aircraft, which can help you identify abnormal oil consumption.

Steps

1. From your role menu, click **Record Oil Uptake**.
2. In the **Aircraft** field, type a partial or full registration code (tail number), and then select the aircraft.
3. (Optional) To record oil consumption for measurements taken at a previous time or date, click the expand button to select a date, and click the time to select a time.

   Note The current server time is displayed; you cannot enter a future time and/or date.

4. In the **Uptake Information** area, select the check boxes next to the inventory for which you want to record an oil consumption measurement, or clear the check box if you do not want to record a measurement for the inventory.
5. In the **Uptake Information** area, in the **Current Uptake** field, enter the value of oil consumed for each assembly.

   Tip You must enter a value greater than or equal to 0, and you can enter up to 10 characters of precision but this value is based on the precision setup on the assembly measurement.

6. (Optional) To record notes associated with the measurement, enter the text, or copy text from an external application and then paste it, in the **Notes** area.

   Tip You can copy text from an external application and paste it into the**Notes** area.

7. In the **Authentication** area, enter your password.
8. Click **Save**.

A record of the oil uptake measurement, including the date and time, the technician that performed the measurement, and any notes entered, is saved in the History area of the task.

Record oil uptake for flights

About this task

You can record oil uptake on completed flights to track oil consumption on applicable assemblies. This can help you to detect inventory that is exceeding normal oil consumption, and plan maintenance activities accordingly.

Steps

1. On the **Flight Search** page, enter your search criteria and click **Search**.
2. On the **Flight Details** page, **Measurements** tab, click **Edit Measurements** .
3. On the **Edit Flight Measurements** page, record the oil uptake value for each assembly and click **OK**.

View the oil consumption report

The oil consumption report details the oil uptake events that occurred during a specific period for specific assembly inventory.

Steps

1. Click the down arrow next to the CAMO logo, then click [your role], and then click **Oil Consumption Report**.
2. In the **Input Controls** dialog box, provide the required information. Note the following:
   - Assembly Class: The assembly class to which the report applies.
   - Assembly: The applicable assembly.
   - Operator: (Optional) The applicable operator.
   - Engine/APU Serial No: (Optional) The serial number of an APU or engine.
   - Start Date: The start date of the date range of the report.
   - End Date: The end date of the date range of the report.
   - Rolling Average Period: The period used to calculate the rolling average.
3. Click **OK**.

Oil consumption report

The following table details the oil consumption report fields.

Field	Description
Title	The title of the report changes depending on the parameter selected.

Field	Description
Start Date	The start date of the date range specified by the user.
End Date	The end date of the date range specified by the user.
Rolling Average Period	The period used to calculate the rolling average.
Page	The page number.
Printed Date	The date the report was generated.
Fleet	The aircraft fleet type and/or assembly code.
A/C	The aircraft registration code.
Position	The assembly position code.
Serial No.	The serial number of the inventory.
Remarks	The date the assembly was installed on the aircraft.
Assembly Rolling Avg.	The current rolling average rate for the assembly.
P/N Rolling Avg.	The current rolling average rate for the part number.
Operator Rolling Avg.	The current rolling average rate for the operator for the part number.
S/N Rolling Avg.	The current rolling average rate for the serial number.
Date	The oil uptake measurement date.
Task	The flight number or task barcode against which the oil uptake was recorded.
TSN	A summary of the accumulated operating hours of the assembly since it was new.
Delta Hours	The sum of hours since the last non-zero quantity entry.

Field	Description
QTY	The oil added after the flight in units of measure selected by the user. The unit of measure is indicated in parentheses.
RAW	The oil consumption rate.
Rolling Avg.	The calculated rolling average rate for the week of the oil recordings.
Status	The oil consumption status of the assembly after the event.

Task supervision

The Task Supervision tab provides the heavy maintenance crew lead with visibility of all tasks assigned to their crew between start and end times. From this tab, crew leads supervise and correct issues related to the recorded labor of technicians.

Technicians complete or job stop a labor row to record work and provide time tracking information. If a technician forgets, or is otherwise unable, to stop time tracking on a task, CAMO provides crew leads with options for adjusting the labor logged by technicians in their respective labor rows.

The Task Supervision tab provides the crew lead with visibility of the problem, and allows them to stop the situation from continuing and correct the data if necessary. Crew leads, with the appropriate privileges, can search for tasks, assigned to their crew, that are scheduled to start between a specific start and end date. After searching, they can view and correct the time tracked for labor rows.

The Task Supervision tab provides crew leads the ability to:

- Monitor progress of scheduled tasks within a specified time window – regardless of task status.
- Address inaccuracies in time tracking, and, if applicable, edit the work performed scheduled hours and the actual hours.
- Perform a job stop by proxy, for technicians who are otherwise unable to perform one.
- Assign or unassign a technician to or from a labor row.

Each crew has a list of assigned tasks, depending on the start date and end date provided as search criteria. Tasks have columns providing information about that task, including: the task name, the task status, the aircraft, and the work location. Certain columns are enhanced with hyperlinks you can click to open the associated details pages. When you close a details page, you return to the Task Supervision tab.

Selected columns in the table provide the following information:

- the technician name – if there is none, it is displayed as "Unassigned". This is a hyperlink to the Labor Details page.
- the labor row stage: ACTV, IN WORK, CANCEL, and COMPLETE. This is the "status" of the labor row, not the task.
- the job stop reason – for example, SHIFT or PARTS.
- the elapsed time: the hours elapsed between the start and current date/time.
- the scheduled hours: the scheduled hours for that job.
- the actual hours: the actual hours logged for that job.

Note Hours under the Elapsed Time column will appear as red if the hours eclipse a configured threshold in the database. Hours under the Actual Hours column appear highlighted in yellow if they eclipse the scheduled hours.

Search criteria values

The search criteria on the Task Supervision tab consists of : a Crew drop-down list; a Scheduled Start Date and Scheduled End Date field; and a Show Complete Job Cards check box.

The Crew drop-down list defaults to the first crew alphanumerically listed for the the user. You can click the dropdown list to select a crew.

The Scheduled Start Date and Scheduled End Date fields, by default, display the start and end date/time of your current shift. If you are not currently on a shift, the start date defaults to the start of the most recent shift, and the end date defaults to the current time. If you have no historical shifts, the default end date is the current date and time, with the start time set ten hours prior to the current time. Click the fields to enter the respective start and end dates, or click the widget to select the dates from a calendar.

The Show Complete Job Cards check box, selected by default, filters out completed job cards. You can toggle this as selected or cleared to view or hide these cards.

Related concepts

Recording work on tasks and faults

Related tasks

Supervise a crew's assigned job cards
Job stop on behalf of a technician
Edit scheduled and actual hours on the Task Supervision tab
Unassign a technician from a labor row

Supervise a crew's assigned job cards

You can review job cards assigned to a crew to see the progress and status of labor rows.

Steps

1. Go to the **Task Supervision** tab.

> **Note** When you open the **Task Supervision** tab, an automatic search may be performed using the default values. Follow the optional step below to refine your results.

2. Click crew from the **Crew** list.
3. Click **Scheduled Start Date** and **Scheduled End Date** to select a start and end date from the calendar.
4. Click **Search**.

> **Tip** You can click on the column headers to sort by column. To perform multiple column sorting, press and hold down the SHIFT or CTRL key before clicking on the column headers. If you want the labor rows grouped by task, sort on task column rather than a labor row column.

Related tasks

Job stop on behalf of a technician
Edit scheduled and actual hours on the Task Supervision tab
Unassign a technician from a labor row

Job stop on behalf of a technician

You can select one or more labor rows and click **Job Stop** to perform a job stop for a technician who is otherwise unable to perform one.

Steps

1. Go to the **Task Supervision** tab.

> **Note** When you open the **Task Supervision** tab, an automatic search may be performed using the default values. Follow the optional step below to refine your results.

2. Click a crew from the **Crew** list.
3. Click **Scheduled Start Date** and **Scheduled End Date** to select a start and end date from the calendar.

4. Click **Search**.
5. Select one or more IN WORK labor rows.
6. Click **Job Stop**.

You have successfully performed a job stop by proxy. On the **Task Details** page, in the **Labor** area, it indicates the crew lead that performed the job stop by proxy, and a note is added to the **Action** area. An entry is also added to the **History** tab stating that the labor row is job stopped by proxy. After the job stop is performed, a new ACTV labor row is added to the task. This new labor row is visible on the **Task Supervision** tab.

Note When a job stop is performed by proxy, there is no work capture or electronic signature. On the labor row, the labor row stage is changed to BY PROXY (Paused By Proxy) to indicate the pause reason.

Related concepts

Recording work on tasks and faults

Edit scheduled and actual hours on the Task Supervision tab

You can edit both the actual hours and scheduled hours for a technician labor row on the Task Supervision tab to perform administrative corrections or an estimation.

Prerequisite

Scheduled hours can only be edited for labor rows that are a result of a job stop. Actual hours can only be edited if the technician has provided a value on the **Work Capture** page.

Steps

1. Go to the **Task Supervision** tab.

   Note When you open the **Task Supervision** tab, an automatic search may be performed using the default values. Follow the optional step below to refine your results.

2. Click a crew from the **Crew** list.
3. Click **Scheduled Start Date** and **Scheduled End Date** to select a start and end date from the calendar.
4. Click **Search**.
   A list of labor rows grouped by task appears. Find the labor row you want to edit.
5. On the labor row, click the **Actual** hours field or the **Scheduled** hours field .

Note These editable fields are indicated by the pencil icon .

6. Enter the new hours, in either hours/minutes (hhh:mmm) or decimal format.
7. Press ENTER or click elsewhere on the page to accept the changes.

You have changed the actual hours or scheduled hours. On the **Task Details** page, in the **History** area, an entry is added indicating the change to the actual or scheduled hours.

Unassign a technician from a labor row

Crew leads can unassign a technician from a labor row, without navigating to the **Labor Details** page, by selecting one or more labor rows and clicking **Unassign** .

Steps

1. Go to the **Task Supervision** tab.

Note When you open the **Task Supervision** tab, an automatic search may be performed using the default values. Follow the optional step below to refine your results.

2. Click a crew from the **Crew** list.
3. Click **Scheduled Start Date** and **Scheduled End Date** to select a start and end date from the calendar.
4. Click **Search**.
5. Select one or more IN WORK or ACTV labor rows.

Note You cannot unassign a technician from a labor row once work capture has been performed; for example, when work is done but is still pending certification or independent inspection.

6. Click **Unassign**.
   You have unassigned the technician for that labor row. The labor row status reverts to ACTV with the technician name replaced with "Unassigned". Two entries are added to the **Task Details** page, **History** tab, stating that the technician was unassigned from the labor row and the status of the labor row has changed.

Tip You can manually assign or unassign a technician by clicking the hyperlink under the Technician column for that labor row to open the **Labor Details** page. On this page you can select a different technician to assign that labor row to them, or select "Unassigned" to unassign a technician from that labor row.

Faults overview

Maintenance organizations use the terms *non-routine*, *finding*, and *discrepancy* to describe the discovery of a problem. CAMO uses the term *fault* as a synonym for these terms. When faults are discovered, they are recorded manually or automatically as logbook faults in CAMO. They are assessed, and either deferred or repaired.

Faults are found and raised by the flight crew during flights, during inspections, and by technicians while maintenance work is being performed.

When a fault is raised, CAMO creates a task with a CORR (corrective) class.

Depending on your role and your current task, there are different places in CAMO to view information about faults in different statuses. See:

- *Review open logbook faults for aircraft*
- *Review deferred logbook faults for aircraft*
- *Review historical logbook faults for aircraft*

For each aircraft, CAMO stores the history of each fault and the corrective actions that were completed to fix the fault. You can see a list of faults raised on an aircraft, or a particular system within the last specified number of days. Technicians and others can see whether a fault has occurred before, and whether there is a relationship to other maintenance or faults. Sometimes, a fault is initially attributed to one component, but upon further analysis it is discovered that it is associated with another component on the aircraft. In this case, you can re-assign the fault to another component. You can also link the current fault to previously raised faults, indicating that a previous fault was not corrected properly.

When you raise a fault manually you have the option to create an ad hoc fault or to create the fault with a fault definition.Fault definitions are typically used for faults that occur frequently and for electronic problems that pilots are alerted to by error codes. If there is no fault definition, you create an ad hoc fault. There are different ways to raise faults depending on a variety of factors. See *Raising faults*. Similar to ad hoc tasks, you can directly add skills under individual job steps under an ad hoc fault based on the presented labor requirement (certification required or not), and edit job steps on the actual ad hoc fault view while maintaining an audit trail of changes made to these steps/skills. See *Ad hoc tasks*.

For faults that are raised by the flight crew or during line and overnight maintenance, technicians work closely with Maintenance Operations Control (MOC) to assess faults and determine whether they must be fixed or can be deferred. At any time engineering assistance might be requested, but all faults raised are either fixed or deferred before the aircraft's next flight. See *Request engineering assistance for tasks and faults*.

In heavy maintenance, while inspectors or technicians are doing a task, they might discover a fault or potential fault. They raise the fault and it's then listed on the Fault Evaluation tab. The fault will be evaluated later and a planner will incorporate required repairs into the schedule. See *Evaluating faults*.

Faults that are found when the component is on-wing are raised against the system where the component is installed. When technicians remove faulty components, the fault information is copied to the removed inventory so it can be repaired. If a fault is raised during execution of a task, the fault is linked to the task in which it was found, but the fault is assigned to the suspected faulty inventory, which may be different from the inventory associated with the original task. These faults are also added to the workscope of the work package. You can keep track of the amount of non-routine work in the work package and monitor progress.

When addressing faults, you select either a deferral or a repair reference. References are created by Engineering or MOC and when technicians select references, labor skills and steps from the reference are copied to the fault. If the reference has follow-on tasks, the follow-ons are automatically initiated when a fault is deferred or repaired. See *Fault references*. If a reference that a technician needs isn't loaded into CAMO you might use an alternative work flow of manually adding sub-tasks to faults to specify the corrective actions required to fix the fault. See *Subtasks on faults*.

Once the fault is closed, CAMO provides summary data for future faults that might use the same corrective action. Specifically, CAMO shows the number of times that the corrective action has been successful for that aircraft and for the entire fleet.

Fault status

The fault's corrective task has a status that's displayed on the Task Information tab, but the fault itself has a separate status that's displayed on the fault's Fault Information tab and on other pages that list the fault status. Faults can have the following statuses:

Fault status Fault Information tab	Corrective task status Task Information tab	Description
OPEN	ACTV (Active) IN WORK	A fault was created. It must be analyzed before the inventory is returned to service. Only faults in OPEN status can be deferred.

Fault status Fault Information tab	Corrective task status Task Information tab	Description
DEFER (Deferred)	ACTV (Active)	The fault is deferred. There is a MOC authorization number for the deferral reference.
CERTIFY (Certified)	COMPLETE	Labor to repair the fault is complete. The fault is effectively closed.
NFF (No fault found)	CANCEL	The reported fault was not found during repair work, or you find that a removed part suspected of causing a fault is not responsible for the fault.

Before the corrective task for the fault can be completed, all steps on the fault's Task Execution tab must be complete or marked NA.

Users with system permission to update fault information can update almost all information for the fault. Fault information can be updated at any time while the fault is active; that is before the fault has been completed. There is a separate permission required to update historical (closed) faults. There is another separate permission required to edit the deadline for a MEL fault.

Viewing and assessing faults

Review open logbook faults for aircraft

You can see a list of all logbook faults that are open for an aircraft. You can assign or unassign open faults.

Steps

1. On your to-do list, **Fleet List** tab, click the aircraft.
2. On the **Inventory Details** page, click the **Open** tab, **Open Faults** tab. The list includes all open and deferred faults that are not assigned to a work package.
3. To include faults that are assigned to work packages, select **Include faults currently assigned to a Work Package**.
4. To group all open faults in the list, click the **Status** column heading to sort the list by status. All open faults are grouped together.

Review deferred logbook faults for aircraft

You can see a list of all logbook faults that were deferred for an aircraft. Deferred faults can be assigned to a work package, or be unassigned.

Steps

1. On your to-do list, **Fleet List** tab, click the aircraft name.
2. On the **Inventory Details** page, click the **Open** tab > **Open Faults** tab. The list includes all open and deferred faults that are not assigned to a work package.
3. To include faults that are assigned to work packages, select **Include faults currently assigned to a Work Package**.

> **Tip** To group all open faults in the list, click the **Status** column heading to sort the list by status. All deferred faults are grouped together.

Review historical logbook faults for aircraft

About this task

Historical faults include those that have been resolved, and those that were designated as No Fault Found (NFF).

Steps

1. On your to-do list, **Fleet List** tab, click the link of the aircraft.
2. On the **Inventory Details** page, click the **Historical** tab.
3. Click the **Faults** tab to see the list of all historical faults.
4. To see only the recent historical faults, enter the number of days in the past from where you want to start in the **Show historical events that occurred within the past** box, and click **OK**.

View fault details

You can view the fault details to see the fault's logbook reference number, estimated due date, and so forth.

Steps

1. Do one of the following:
   - In the **Barcode Search** field, type the barcode of fault, and then press ENTER.
   - On the **Fleet List** tab, in the **Aircraft** column, click the aircraft, then click the **Open** tab, then click the **Open Faults** tab, then, in the **Fault Name** column, and then click the fault name or ID.

- Click the down arrow next to the CAMO logo, then click your role, then click **Fault Search**, enter the fault information, and then click **Search**.

2. View the details of the fault in the **Details** area.

> **Tip** If the fault has sensitivities associated with it, click a chip next to **Sensitivities** to view more detailed sensitivity information.

Evaluating faults

Faults found and raised during maintenance tasks are listed on the Fault Evaluation tab. Fault evaluators can filter the list of faults raised by work package and zone and from this page, can link to faults, add information required to address them and mark faults as evaluated.

The Fault Evaluation tab is useful in hangar maintenance visits where there are different people raising, evaluating, and repairing faults. For example, after an aircraft arrives for a heavy maintenance visit, teams of inspectors raise all the faults they can find. These faults are then listed on the Fault Evaluation tab. A senior technician, crew lead, or fault evaluator assesses what repair is required and adds information to the fault. Planners schedule when the fault will be repaired.

When you view the Fault Evaluation tab, you can filter by work package and zone.

During your evaluation you can add or update information such as:

- Repair reference.
- Labor, part, and tool requirements.
- Job card steps, work instructions.
- Measurements.
- Technical references, attachments.
- Zones and panels.

When you mark the fault as evaluated, the fault is removed from the Fault Evaluation tab and the fault's Evaluated check box is selected.

The In Engineering column indicates that engineering was requested for a fault.

Mark faults as evaluated

As you work through the faults in a work package that require evaluation, after you add information to the faults, you mark each one as evaluated. When this step is complete, the fault is marked as evaluated on the Fault Information tab, and is ready for repair.

About this task

This step cannot be undone.

Instead of starting from the Fault Evaluation tab, you can go directly to the fault's Task Details page.

The following steps start on the Fault Evaluation tab.

Steps

1. From you **To Do List**, go to the **Fault Evaluation** tab.
2. In the **Search Criteria**, select a work package from the list.
3. (Optional) Select a zone from the list.
4. Click **Search**.
5. Click the name of a fault.
6. On the **Fault Details** page, add information to the fault.
7. When you are done adding information, click the **Finish Evaluation** button if it is available to you. Otherwise click **Close** and continue to the next step.
8. On the **Fault Evaluation** tab, select the work package for the faults that you evaluated.
9. Select check boxes for one or more faults and click **Finish Evaluation**.
10. In the confirmation box, click **YES**.

Related tasks

Select reference for fault repair

Request engineering assistance for tasks and faults

About this task

While work on a maintenance visit is progressing, you might discover a problem that requires engineering authority to proceed, or an engineering order to repair the damage. Also, you might discover that a job card does not have the correct technical information to complete a task, potentially requiring an update to the job cards. In CAMO, you can request engineering support, which sends the task details to users who can help.

Steps

1. In the **Barcode Search** field, enter the barcode of the task.
2. On the Task or Fault Details page, click the **Task Execution** tab.

3. In the **Labor** area, click **Add Labor Requirement** .
4. On the **Labor Requirement Details** page, in the **Labor Skill** list, select **ENG** (Engineering) and click **OK**. The task is listed on the to-do list and on the unassigned alerts of users in the engineering department.
5. In the **Barcode Search** field, enter the barcode of the fault.
6. On the Task or Fault Details page, click **Request Engineering**.
7. In the Confirmation box, click **Yes**.

The fault is listed on the to-do list and on the unassigned alerts of users in the engineering department.

Mark faults as no fault found

If a removed part suspected of causing a fault is found to be not responsible for the fault, you can record in CAMO that no fault was found. You might also mark a fault this way if you cannot observe it or find it when you attempt to repair it.

Prerequisite

You can only mark a fault as no fault found if it has an open or deferred status.

About this task

When you mark a fault as no fault found, CAMO does the following:

- Sets the fault status to NFF (No Fault Found).
- If there is a troubleshooting task, leaves the troubleshooting task of the fault, shown on the Task Information tab, intact.
- Marks all corrective sub-tasks unsuccessful fixes.
- Deletes related faults.
- If you do this during line maintenance, resets the operating status of the aircraft as required.

Steps

1. Find the fault.
2. On the **Fault Details** page, click **No Fault Found**.
3. If prompted, enter your password, and then click **OK**.

Cancel faults on inventory

You can cancel a fault that no longer applies to an inventory item. Do this after you have marked the fault as no fault found.

Steps

1. Do one of the following:
   - In the **Barcode Search** field, enter the fault's barcode and press Enter.

- On the **Fault Search** page, enter your search criteria and click **Search**.
- On your to-do list's **Engineering Required - Tasks** tab, click the fault name.
- On the **Inventory Details** page, **Open** tab, **Open Faults** tab, click the fault name.

2. On the **Inventory Details** page, **Open** tab, **Open Faults** tab, select the fault, and click **Cancel Fault**.
3. On the **Cancel Fault** page, provide the requested information, and click **OK**.
4. If prompted, type your password, and click **OK**.

Raising faults

When you raise a fault, you specify who found the problem, the symptoms observed, the item that is inoperative, the manner in which the item is inoperative, and the operational impact of the problem, including any impact on flight safety.

Faults found when a component is on-wing, are raised against the system where the component is installed. Raising faults against the failed system ensures that logbook faults are part of the aircraft records, and stay with the aircraft. It is often difficult to determine the root cause of a fault, so during the subsequent fault analysis, you can change the system that's associated with the fault. The ENFORCE_RAISE_FAULT_AGAINST_SYSTEM configuration parameter controls whether you can raise faults against a component, or only against systems. If a damage record is added to the fault, the damage record remains with the faulty component.

If a faulty component is removed from the aircraft, the fault is copied and attached to the removed inventory, so that the aircraft and the component both have a record of the fault. The fault on the aircraft is complete because the faulty component was replaced with a serviceable component. The fault on the component is still open and must be addressed. After the component is removed from an aircraft, you can edit the fault to update the failed system.

When you raise a fault, you have the option to create an ad hoc fault or to create the fault with a fault definition. Fault definitions describe a problem and they can have troubleshooting tasks that are used to see if the problem can be easily resolved by various corrective actions that don't involve a full-scale repair. To use a fault definition, someone within your organization must have created it beforehand. Fault definitions are typically used for faults that occur frequently and for electronic problems that pilots are alerted to by error codes. Selecting a fault definition when you raise a fault, populates the fault properties on the Raise Logbook Fault page. CAMO also provides a history of the corrective actions that have been successful in correcting the problem on both the aircraft and fleet-wide.

The way that you raise faults in CAMO depends on the severity of the fault, whether the aircraft is in the flight plan or in a heavy maintenance visit, whether you plan to defer or repair, and whether you use the select reference workflow.

Day of and overnight maintenance

In day-of and overnight maintenance, faults are often raised and deferred. In CAMO when you raise a fault, you might see an option to select 'Log fault and defer'. This workflow isn't suitable if you use any of the following CAMO functionality:

- Electronic signatures.
- Select reference.
- MOC approval workflow for references that require authorization.
- Automatic initiation of follow-on tasks when faults are deferred.

If your organization uses these features, then to defer a fault, you raise the fault and leave it open, then select a deferral reference.

Faults are also raised and deferred by phone with the pilot or technician relaying information to Maintenance Operations Control (MOC). A controller can raise a fault on behalf of the technician, and authorize its deferral.

In addition to raising and deferring faults, you have the following options, depending how CAMOis configured:

Log fault and request part immediately

When a fault must be repaired urgently, if you are raising a fault from the inventory details, choosing this option either creates a work package for the fault or, if there is already an open work package for the inventory, adds the fault to the open work package. If there is already an open work package on the inventory, the work is done in the location specified on the open work package. After you create the fault, you can select a repair reference. The work package that's created when you choose this option starts automatically if there are no In Work work packages assigned to the aircraft, and if the fault's Found On date is not a future date.

Log fault and leave open

Choose this option when the fault must be analyzed and evaluated. With the fault created, you can select a reference to defer or repair the fault (which automatically triggers MOC review if required, works with electronic signatures, and automatically initiates follow-on tasks that are specified in the reference).

If the fault is created from a work package or a task, then CAMO assigns the fault to that work package, with a corrective task status of ACTV. If the fault is created from an item of inventory or a flight, then CAMO leaves the fault loose on the inventory with a fault status of Open. If the root inventory is an aircraft, the aircraft operating status is changed to Open, and the aircraft cannot be returned to service until the fault is fixed or deferred.

Log fault and close

With this option, you can't select a repair reference. Some organizations might use this option if a fault is already addressed and you want to create a record of the problem and what was done to fix it. When you select this option, CAMO creates a work package with the same name

as the fault, includes the fault in the work package, and completes both the fault and the work package.

Log fault and commit

With this option, you are required to enter a logbook reference. This option should be utilized in scenarios where a pilot wishes to directly communicate a discovered fault to MOC with the intention that the fault will be packaged and committed for the next available work period. When you select this option, CAMO will create the fault and assign it into a newly created and committed work package. If there is an already IN WORK work package on the aircraft, the fault will be assigned into that work package instead.

Heavy or base maintenance execution

In heavy maintenance the typical workflow is that faults are found while executing tasks in the current work package. Faults are raised from the Task Details or Work Package Details pages, the fault is left open and listed on the Fault Evaluation tab for review by a senior technician, crew lead, or fault evaluator.

If a repair is completed and you are recording that the work was done, you might also log the fault and close it, but if you are adding a repair reference, you'll need to raise an open fault and select the reference before closing the fault.

Raise a logbook fault and leave it open

About this task

If the fault has not been addressed yet, follow the steps below to raise the fault and leave it open in the work package.

Steps

1. Do one of the following:
   - In the **Barcode Search** field, enter the work package barcode, and press Enter.
   - On your to-do list, in the **Work Package** column of any tab, click a work package name.
2. On the **Work Package Details** page, click the **Workscope** tab.
3. Click **Raise Logbook Fault**.
4. Click **Log fault and leave open**.
5. In the **Fault Registration** area, do one of the following:

To	Do this
Use a reusable fault definition	**a.** Click Select Fault Definition . **b.** Enter the fault definition name, or select the failed system, and then click **Search**.

To	Do this
	c. In the list of fault definitions found, click the fault definition.
Create an ad hoc fault	**a.** In the **Fault Name** field, enter the name of the fault. **b.** Provide the required information. For more help, note the following: • **Logbook Reference**: If the fault was first recorded in a logbook, enter the logbook reference number. • **Failed System**: Click , then click next to the aircraft until you see the failed system, and then click the ATA chapter where the fault occurred. • **Found During Flight**: Click , and then click the flight during which the fault was detected. • **Fault Description**: Enter the description of the fault, exactly as it is written in the logbook. • The **Fault Source** list defaults to MECH (Mechanic), but you can change this value if required.

6. In the **Suggested Corrective Action** area, provide the required information. Note the following:
   - **Independent Inspection Required**: Select if the work that will be done to fix the fault must be inspected.
   - **Request Engineering**: Select if you want this fault to be sent to your organization's engineering department for assistance.
7. In the **Fault Details** area, provide the required information. Note the following:
   - **Recurrence Of**: If this fault is possibly a recurrence of a fault that occurred in the past on this aircraft, the name of the previous fault is shown.
8. In the **Resulting Events** area, click the plus sign to add resulting events (if required).
9. Click **OK**.

Raise a fault and request a part immediately

About this task

Raising a fault and requesting parts immediately grounds the aircraft until the task is completed or deferred.

Steps

1. Do one of the following:
   - In the **Barcode Search** field, enter the work package barcode, and press Enter.
   - On the **Task Search** page, in the **Work Package Information** area, provide the information requested and click **Search**.
   - On your to-do list, in the **Work Package** column of any tab, click a work package name.
2. On the **Work Package Details** page, click the **Workscope** tab.
3. Click **Log fault and request part immediately**.
4. In the **Fault Registration** area, do one of the following:

To	Do this
Use a reusable fault definition	**a.** Click Select Fault Definition . **b.** Enter the fault definition name, or select the failed system, and then click **Search**. **c.** In the list of fault definitions found, click the fault definition.
Create an ad hoc fault	**a.** In the **Fault Name** field, enter the name of the fault. **b.** Provide the required information. For more help, note the following: • **Logbook Reference**: If the fault was first recorded in a logbook, enter the logbook reference number. • **Failed System**: Click , then click next to the aircraft until you see the failed system, and then click the ATA chapter where the fault occurred. • **Found During Flight**: Click , and then click the flight during which the fault was detected. • **Fault Description**: Enter the description of the fault, exactly as it is written in the logbook.

To	Do this
	• The **Fault Source** list defaults to MECH (Mechanic), but you can change this value if required.

5. In the **Suggested Corrective Action** area, provide the required information. Note the following:
   - **Independent Inspection Required**: Select if the work that will be done to fix the fault must be inspected.
   - **Request Engineering**: Select if you want this fault to be sent to your organization's engineering department for assistance.
6. In the **Fault Details** area, provide the required information. Note the following:
   - **Recurrence Of**: If this fault is possibly a recurrence of a fault that occurred in the past on this aircraft, the name of the previous fault is shown.
7. In the **Resulting Events** area, click the plus sign ⊞ to add resulting events (if required).
8. Click **OK**.

Raise a logbook fault and close it

If a fault is already addressed and you want to create a record of the problem and what was done to fix it, you can select the Log fault and close option when you raise the fault. When you select this option, CAMO creates a work package with the same name as the fault, includes the fault in the work package, and completes both the fault and the work package.

About this task

If you need to select a repair reference for the fault, don't use this procedure. Instead raise the fault and leave it open, then select the repair reference.

Steps

1. Do one of the following:
   - On the **Fleet List** tab, select an aircraft, and click **Raise Logbook Fault**.
   - On the **Inventory Details** page, **Open** tab click **Raise Logbook Fault**.
   - On the **Work Package Details** page click **Raise Logbook Fault**.
   - On the **Task Details** page, click **Found Faults**.
2. In the **What to do** area, select **Log fault and close**.
3. In the **Fault Registration** area, do one of the following:

To	Do this
Use a reusable fault definition	**a.** Click Select Fault Definition 🔍.

To	Do this
	b. Enter the fault definition name, or select the failed system, and then click **Search**. **c.** In the list of fault definitions found, click the fault definition.
Create an ad hoc fault	**a.** In the **Fault Name** field, enter the name of the fault. **b.** Provide the required information. For more help, note the following: • **Logbook Reference**: If the fault was first recorded in a logbook, enter the logbook reference number. • **Failed System**: Click, then click next to the aircraft until you see the failed system, and then click the ATA chapter where the fault occurred. • **Found During Flight**: Click, and then click the flight during which the fault was detected. • **Fault Description**: Enter the description of the fault, exactly as it is written in the logbook. • The **Fault Source** list defaults to MECH (Mechanic), but you can change this value if required.

4. In the **Corrective Action** area, provide the required information. Note the following:
   - **Corrective Action**: Enter what you did to resolve the fault; if this information is in the logbook, enter it exactly as it is written in the logbook.
   - **Repair Location**: Update the location where the fault was fixed, if necessary.
   - **Labor Skill**: Select the skill that was used to resolve the fault.
5. In the **Fault Details** area, provide the required information. Note the following:
   - **Recurrence Of**: If this fault is possibly a recurrence of a fault that occurred in the past on this aircraft, the name of the previous fault is shown; if it is not the correct fault, click **Select Recurring Task** to select the correct fault.
6. In the **Resulting Events** area, click the plus sign to add resulting events (if required).
7. Click **OK**.

Raise a logbook fault and defer it

Steps

1. Do one of the following:
   - In the **Barcode Search** field, enter the work package barcode, and press Enter.
   - On the **Task Search** page, in the **Work Package Information** area, provide the information requested and click **Search**.
   - On your to-do list, in the **Work Package** column of any tab, click a work package name.
   - On the **Fleet List** tab, select an aircraft, and then click **Raise Logbook Fault**.
2. On the **Work Package Details** page, click the **Workscope** tab.
3. Click **Log fault and defer**.
4. In the **Fault Registration** area, do one of the following:

To	Do this
Use a reusable fault definition	**a.** Click Select Fault Definition. **b.** Enter the fault definition name, or select the failed system, and then click **Search**. **c.** In the list of fault definitions found, click the fault definition.
Create an ad hoc fault	**a.** In the **Fault Name** field, enter the name of the fault. **b.** Provide the required information. For more help, note the following: • **Logbook Reference**: If the fault was first recorded in a logbook, enter the logbook reference number. • **Failed System**: Click, then click next to the aircraft until you see the failed system, and then click the ATA chapter where the fault occurred. • **Found During Flight**: Click, and then click the flight during which the fault was detected. • **Fault Description**: Enter the description of the fault, exactly as it is written in the logbook.

To	Do this
	• The **Fault Source** list defaults to MECH (Mechanic), but you can change this value if required.

5. In the **Deferral Information** area, provide the required information. Note the following:
   - **Capability**: If the capability of the aircraft is changing as a result of the fault, select the new capability.
   - **Deferral Reference**: Click **Select Deferral** to view a list of legacy deferral references. If you manually enter a deferral reference name, the remaining fields are not populated and you must complete these fields manually.
6. In the **Fault Details** area, provide the information requested.
7. In the **Resulting Events** area, click the plus sign to add resulting events (if required).
8. Click **OK**.

Raising non-routine work and shop findings

When a work package is in progress, you can create new tasks to identify logbook faults reported by the flight crew or on-board systems, and other non-routine, unplanned work that has to be done. In CAMO, these tasks are called faults. If you detected a fault, and completed the work immediately, you can raise the fault in CAMO and close it immediately to have a record of the problem that was addressed. If the fault has not been addressed, you can raise the fault and leave it open.

For logbook faults, you can raise faults from the work package, which assigns the faults to the work package, or you can raise the faults on the inventory of the aircraft. When you raise the fault on the inventory record, never select to leave the fault open because an open fault can ground the aircraft. If the fault has been addressed, raise and close it. Otherwise, select from the other options that are available: you can raise non-urgent faults and defer them so that they will be addressed later, or raise the fault and request parts for it immediately if it is more urgent.

For faults found during the inspection phase of heavy maintenance visits or during shop maintenance, you can raise a fault from the work package, or from the tasks that are in the work package—for example, the task you were working on when you found the issue—so that the fault is associated with the task during which it was detected.

When raising a fault that occurs frequently, you might be able to use a fault definition—a reusable template that contains many of the details of the faults and that can also include troubleshooting information and possible corrective actions. To use a fault definition, someone within your organization must have created it beforehand. Otherwise, you create what is called an ad hoc fault, one that is not based on a fault definition.

Record non-routines during inspection or during other tasks

Follow the steps in this workflow to record a non-routine or a shop finding—both called a fault in CAMO—while working on another task, be it an inspection task or other type of work.

Prerequisite

- The initiating task is either active, in work, or completed.

About this task

When you record the fault from a task, CAMO associates the fault to that task, which is referred to as the initiating task.

If the fault was addressed before you had time to record it in CAMO, you record the fault and close it immediately. For faults that are not addressed—because the work must be done later during the visit, or the fault must be evaluated by the maintenance controller—you record the fault and leave it open.

When raising a fault, you can choose to reuse an existing fault definitions, or create an ad hoc task.

Steps

1. Do one of the following:
   - In the **Barcode Search** field, scan or enter the barcode of the task, and press Enter.
   - On the **Task Search** page, enter your search criteria, and click **Search**.
   - On your to-do list, **My Tasks** tab, select the check box of the task.

   Depending on whether the fault is addressed or not, follow the correct procedure from one of the following:

   Use these instructions when you found a fault as you were working on a task, and fixed the fault immediately.
2. On the **Task Details** page, click **Found Faults**.
3. On the **Raise Logbook Fault** page, select **Log fault and close** or **Log fault and leave open**.
4. To use a reusable fault definition, in the **Fault Registration** area, do the following:
   - Click **Select Fault Definition** .
   - On the **Select Fault Definition** page, search for relevant fault definitions by entering the fault definition name, or by selecting the failed system, and click Search.
   - In the list of fault definitions found, select the fault definition.
5. To raise an ad hoc fault, in the **Fault Registration** area, provide the required information. Note the following:
   - **Logbook Reference**: If the fault was first recorded in a logbook, enter the logbook reference number.
   - **Failed System**: Click . Click next to the aircraft until you see the failed system. Select the radio button beside the ATA chapter where the fault occurred.

- **Resolution Config Slot**: If the fault was resolved on a different ATA chapter (resolved system) than the initially reported ATA chapter (failed system), start typing the name or ATA code of the config slot on which the issue was resolved, and then click the result from the list.
- **Fault Description**: Enter the description of the fault, exactly as it is written in the logbook.

6. For faults you are raising and closing immediately, in the **Corrective Action** area, provide the required information. Note the following:
   - **Corrective Action**: Enter what you did to resolve the fault; if this information is in the logbook, enter it exactly as it is written in the logbook.
   - **Repair Location**: Update the location where the fault was fixed, if necessary.
   - **Labor Skill**: Select the skill that was used to resolve the fault.
   - **Hours Spent**: Enter the number of hours spent to address the fault.
7. For faults you are raising and leaving open, in the **Suggested Corrective Action** area, provide the required information. Note the following:
   - **Independent Inspection Required**: Select if the work that will be done to fix the fault must be inspected.
   - **Request Engineering**: Select if you want this fault to be sent to your organization's engineering department for assistance.
8. In the **Fault Details** area, provide the required information. Note the following:
   - **Recurrence Of**: If this fault is possibly a recurrence of a fault that occurred in the past on this aircraft, the name of the previous fault is shown; if it is not the correct fault, click Select Recurring Task to select the correct fault.

   Tip You can record measurement values that provide relevant details for the fault by clicking above the table.

9. Click **OK**.
10. If this is potentially a recurring fault, but the **Recurrence Of** field was empty when you clicked OK, the **Find Recurring Fault** page opens. Select a fault that the current fault is a recurrence of, or select N/A if not applicable, and click **OK**.

Record logbook faults from work packages

Prerequisite

- The work package is committed or in work.

About this task

The steps outlined below describe the different ways you can record logbook faults within an upcoming or in progress work package. You can raise a fault and close it immediately, for situations where you are recording the fault after it was addressed, or you can raise a fault and leave it open when the work required to address it will be done later.

Steps

1. Do one of the following:
   - In the **Barcode Search** field, enter the work package barcode, and press Enter.
   - On the **Task Search** page, in the **Work Package Information** area, provide the information requested and click **Search**.
   - On your to-do list, in the **Work Package** column of any tab, click a work package name.
2. On the **Work Package Details** page, click the **Workscope** tab.
3. Click **Raise Logbook Fault**.
4. On the **Raise Logbook Fault page**, select **Log fault and close** or **Log fault and leave open**.
5. To use a reusable fault definition, in the **Fault Registration** area, do the following. To raise an ad hoc fault, go to the next step:
   - Click **Select Fault Definition** .
   - On the **Select Fault Definition** page, search for relevant fault definitions by typing either the fault definition name, or by selecting the failed system, and click **Search**.
   - In the list of fault definitions found, select the radio button of the fault definition.
6. On the **Raise Logbook Fault** page, in the **Fault Registration** area, provide the required information. Note the following:
   - **Logbook Reference**: If the fault was first recorded in a logbook, enter the logbook reference number.
   - **Failed System**: Click . Click next to the aircraft until you see the failed system. Select the radio button beside the ATA chapter where the fault occurred.
   - **Resolution Config Slot**: If the fault was resolved on a different ATA chapter (resolved system) than the initially reported ATA chapter (failed system), start typing the name or ATA code of the config slot on which the issue was resolved, and then click the result from the list.
   - **Found On Date**: Enter the date when the fault was found.
   - **Fault Source**: Select the source of the fault.
   - **Fault Description**: Enter the description of the fault, exactly as it is written in the logbook.
7. Do one of the following:

For	Provide the following information
For faults you are raising and closing immediately	In the **Corrective Action** area, provide the following information: • **Corrective Action**: Enter what you did to resolve the fault; if this information is in the logbook, enter it exactly as it is written in the logbook. • **Repair Location**: Update the location where the fault was fixed, if necessary. • **Labor Skill**: Select the skill that was used to resolve the fault. • **Hours Spent**: Enter the number of hours spent to address the fault.
For faults you are raising and leaving open	In the **Suggested Corrective Action** area, provide the required information. For more help, note the following: • **Independent Inspection Required**: Select if the work that will be done to fix the fault must be inspected. • **Request Engineering**: Select if you want this fault to be sent to your organization's engineering department for assistance.

8. In the **Fault Details** area, provide the required information. Note the following:
   - **Recurrence Of**: If this fault is possibly a recurrence of a fault that occurred in the past on this aircraft, the name of the previous fault is shown; if it is not the correct fault, click **Select Recurring Task** to select the correct fault.

   Tip You can record measurement values that provide relevant details for the fault by clicking above the table.

9. Click **OK**.
10. If this is potentially a recurring fault, but the **Recurrence Of** field was empty when you clicked **OK**, the **Find Recurring Fault** page opens. Select a fault that the current fault is a recurrence of, or select N/A if not applicable, and click **OK**. The fault appears at the bottom of the **Workscope** tab and has the status COMPLETE. If you raised the fault from a fault definition that has an associated troubleshooting task, the troubleshooting task appears on the **Workscope** tab.

Damage records

Damage records indicate the exact location of damage on an aircraft or tracked component.

The damage location is important when technicians repair faults or perform follow-on inspection tasks for deferred faults. Adding damage records is often optional, but not always. To ensure that applicable follow-on tasks are initialized after repairs, damage records are required for some repair references.

When you add a damage record, you can link the damage location to either an aircraft or a tracked component. If the component is later removed from the aircraft, the damage record remains associated with the removed inventory.

You can add damage records to faults at any time - when faults are raised, assessed, deferred, or repaired. When a damage record is added, edited, or removed from a fault, you can see details on the fault's Damage Record tab. History notes are recorded on the Fault Details, Fault Information tab.

You can add damage records to faults in any status except the No Fault Found status.

You must add damage records to faults when engineers specify on repair references that a damage record, and possibly a component damage record is required. If a technician selects a repair reference that requires a damage record, a message stating the requirement is displayed and the repair cannot be completed until the damage record is attached. When the repair is completed, FOLLOW class tasks against the components that are identified in the damage record are initialized (in addition to other applicable follow-on tasks defined in the repair reference). If the repaired component is removed from the aircraft, the follow-on tasks remain associated with the inventory identified in the damage record.

If a follow-on task is automatically or manually initialized from a fault that has a damage record, then you can see a link to the originating fault, a link to the damaged inventory, and the damage location on the follow-on task's Task Details page, Task Execution tab, Originating Fault area.

Additionally, because an aircraft can have many of the exact same follow-on inspection tasks for different damage locations, the damage location is appended to the task name on follow-on tasks that are manually or automatically initialized from repaired faults that have damage records. For example: 52-00-R3-INSP (Visual Inspection) - STA 74 0.8" FWD.

Add a damage record to a fault

You can quickly add a damage record to a fault for an aircraft or a component. You can use this information to identify the specific location regarding where a repair or inspection is required.

Steps

1. Do one of the following:
   - In the **Barcode Search** field, scan or enter the fault's barcode, and then press Enter.
   - On the **Fault Search** page, enter your search criteria, and then click **Search**.

- On your to-do list **Engineering Required - Tasks** tab, click the fault name.
- On the **Inventory Details** page, **Open** tab, **Open Faults** tab, click the fault name.

2. Click **Add Damage Record**.
3. Do one of the following:
   - If the damage is on the aircraft, click **Aircraft**.
   - If the damage is on a sub assembly or tracked inventory, click **Component** and then enter the name of the component, the part number, or the serial number.
4. In the **Location** field, enter damage location information, (for example: STA 74 0.8" FWD).
5. Click **OK**.

A note regarding this change is added to the **Task Details** page for the fault, on the **Fault Information** tab.

View damage records on a fault

After damage records have been added to a fault, you can view them on the Damage Record tab.

Steps

1. Do one of the following:
   - In the **Barcode Search** field, scan or enter the fault's barcode, and then press Enter.
   - On the **Fault Search** page, enter your search criteria, and then click **Search**.
   - On your to-do list **Engineering Required - Tasks** tab, click the fault name.
   - On the **Inventory Details** page, **Open** tab, **Open Faults** tab, click the fault name.
2. Click the **Damage Record** tab.

Edit a damage record on a fault

You can edit an existing damage record, such as the damage location and/or the fault association, to correct errors or provide new information.

Steps

1. Do one of the following:
   - In the **Barcode Search** field, scan or enter the fault's barcode, and then press Enter.
   - On the **Fault Search** page, enter your search criteria, and then click **Search**.
   - On your to-do list **Engineering Required - Tasks** tab, click the fault name.
   - On the **Inventory Details** page, **Open** tab, **Open Faults** tab, click the fault name.
2. Click the **Damage Record** tab.
3. In the **Details** area, click **Edit Damage Record**.
4. Update the damage record as required, and then click **OK**.

A note regarding this change is added to the **Task Details** page for the fault, on the **Fault Information** tab.

Fault references

Deferral and repair references are created by engineering or Maintenance Operations Control. These references are then selected by technicians when they defer or repair faults. References can include follow-on tasks that are automatically initiated after faults are deferred or repaired. Automatic initiation of follow-on tasks saves time and ensures that important follow-on requirements aren't missed.

There are two types of references that are applied to faults:

Deferral references

Deferral references are used to justify deferring faults. They include all the relevant information about the fault, impacts, and deferral restrictions. Deferral references typically require MOC authorization.

Repair references

Repair references describe standard repairs including steps and all requirements for the repair. Steps, labor, and skills from repair references are copied to faults for sign-off. Repair references typically don't require MOC authorization. If you select a reference that doesn't require MOC authorization, you can proceed with your work.

If MOC authorization is required:

- You can monitor the status of the reference request on the Work Package Details page, Workscope tab or on the Task Details page, Fault Information tab.
- You can't finish a repair (the Finish button is disabled) until the selected reference is approved.
- If technicians do job stops to defer faults, the Job Stop button is disabled until the selected reference is approved. (If faults are deferred when MOC authorizes references, the Job Stop button is not disabled.)
- On a repair reference that requires MOC authorization, labor skills and steps are displayed on the fault after MOC approves the reference.

Reference authorization requests can have the following approval statuses:

Status	Description
MOC Authorization is not required	The selected reference doesn't require MOC authorization.
PENDING	The selected reference was submitted to MOC for review.

Status	Description
APPROVED	The selected reference was approved by MOC. Technicians can proceed with: • Finishing repairs. • Job stopping to defer faults (if the fault was not deferred when the reference was approved).
REJECTED	The selected reference was rejected by MOC. Typically this means that a fault must be repaired instead of deferred.
CANCELED	The fault that the reference was selected for was canceled. The fault status is no fault found.

Reference selection

You can select references for faults as follows:

- For active OPEN faults on aircraft (SYS).
- For deferred (DEFER) faults - you can select only repair references.
- For active and deferred faults that are in work packages or not in work packages.
- For open faults on SER, TRK, or ASSY inventory installed on component (instead of system) configuration slots when the ENFORCE_RAISE_FAULT_AGAINST_SYSTEM configuration parameter is false. Typically, this parameter is true and faults are raised against systems.

You can only use the Select Reference button to select references for faults, not for tasks.

You cannot select references for faults that are in the following conditions:

- Fault is historical.
- Fault is being batch completed.

If a reference is awaiting authorization and the fault is canceled, then the authorization request is also canceled.

Depending on the type of selected reference and its status, technicians and maintenance controllers can change or clear references.

- If you select a reference that requires authorization (its status is PENDING), you can change the selected reference - the current request for reference authorization is canceled and a new one is submitted.
- If a repair reference is selected, but while working on the fault, you decide the reference isn't right, you can select another reference.
- If work is in progress or a fault is not yet deferred, you can clear a reference. You might do this if you find that a repair doesn't need to be done or if you need to change to a repair reference that isn't defined in CAMO.

- When reviewing pending reference approvals, maintenance controllers can change the selected reference before approving the request.

Decision support information

When you select a reference, CAMO displays information that's relevant to the deferral or repair reference and to the fault. In general terms, you see the following:

- Information about the deferral or repair reference, including but not limited to:
  - Whether the reference requires MOC authorization.
  - Whether the repair reference requires a damage record on the fault.
  - Applicability range, effect on capability, how many of the total installed are required for dispatch.
  - Conflicting or associated deferral references.
  - Operational restrictions, maintenance actions, performance penalties.
  - Instructions for continued airworthiness (repair references) or recurring inspections (deferral references): follow-on tasks that are linked to the reference and that are applicable to either the aircraft or to a sub-assembly. Follow-on tasks are applicable to sub-assemblies when a fault has a damage record and the damage location is on one of the sub-assembly's tracked config slots.
- Fault information: name, aircraft the fault is on, failed system that the fault is on, etc.
- Open faults, deferred faults, faults completed in the last ten days.
- Upcoming flights.

This information helps you decide whether the selected reference is appropriate.

Approving reference requests

When creating references, engineers specify whether maintenance operations control (MOC) authorization is required before the reference can be used to defer or repair a fault. If MOC authorization is required for a reference that was selected by a technician, an approval request is automatically displayed on the Pending Reference Approvals tab.

You review and approve or reject the request to use the reference. On Pending Reference Approvals tab, you see requests for aircraft that you have authority for. The requests are listed in the order they were created, and you can see the total number of pending requests.

The first request on the list is selected and you see relevant details including the aircraft, system, the fault name, whether the fault was evaluated, the reference assigned to the request (which you can change), the barcode of the fault (which links to the fault's Task Details page), the reason if applicable, notes made by the person requesting fault deferral or approval of the repair reference, and any measurements that are marked for review and approval by MOC.

The **Decision Support** pane displays information about the fault and information about either the repair or the deferral reference including any operational restrictions the repair or deferral would

cause, a list of open and deferred faults, and upcoming flights for the aircraft. Use this information to assess whether to approve the request.

For unselected requests in the list, you see summary information.

Change the reference on a reference authorization request

When you review fault deferral or repair reference requests, if you decide that a reference that was selected by a technician is not the correct one, you can change it.

Steps

1. On your to-do list, select the **Pending Reference Approvals** menu item or click the **Pending Reference Approvals** button.
   The **Pending Reference Approvals** page opens. The first request is selected and its summary and decision support information is visible.
2. Click for the correct reference request to display its information.
3. In the **Deferral Reference** or **Repair Reference** field, start typing the reference name or code. As you type, references that match what you typed are listed.
4. Select the correct reference from the list.
   Based on the reference you select, information in the **Decision Support** pane updates.
5. Click **APPLY** to update the reference for the fault to the one you selected, or **CANCEL** to keep the reference that is currently assigned.
   The reference change is recorded in a note on the **Fault Information** tab, **Fault History** area.

Approve deferral or repair reference requests

For aircraft that you have authority for, the Pending Reference Approvals page lists all the fault deferral and repair reference requests that require authorization. After you review a request, you approve or reject it.

Steps

1. On your to-do list, select the **Pending Reference Approvals** menu item or click the **Pending Reference Approvals** button.
2. (Optional) On the **Pending Reference Requests** page, to filter the list by aircraft group, click , select the aircraft group(s), and click **APPLY**.

   Tip Use the vertical scroll bar to move down or up in the list of requests.

3. In the **Decision Support** pane, review the information to assess whether you should approve the request.

4. (Optional) To use a different reference than the one selected by the technician, click the **Deferral Reference** or **Repair Reference** field, enter the new reference and click **APPLY**. Click **CANCEL** to return to the reference that was in the request originally.
5. After assessing the request, do one of the following:
   - Click **APPROVE** and on the confirmation messages, click **YES**, then **OK**.
   - Click **REJECT** and on the confirmation messages, click **YES**, then **OK**.

   The **Fault Details** page, **Fault Information** tab is updated with a history note and information about the repair or deferral reference (authorization number, status).

If you approve a deferral reference:

- The Found on Date is used to calculate the due date.
- Depending on the setting for the DEFER_ON_APPROVAL configuration parameter, the fault could be deferred when MOC approves the reference request. Alternatively, after the reference is approved, the technician job stops to defer the fault.

See reference authorization status

For all faults in a work package, line technicians can see the status of fault deferral and repair reference requests that were sent to maintenance control.

About this task

References can have the following statuses:

Status	Description
MOC Authorization is not required	The selected reference doesn't require MOC authorization.
PENDING	The selected reference was submitted to MOC for review.
APPROVED	The selected reference was approved by MOC. Technicians can proceed with: • Finishing repairs. • Job stopping to defer faults (if the fault was not deferred when the reference was approved).
REJECTED	The selected reference was rejected by MOC. Typically this means that a fault must be repaired instead of deferred.
CANCELED	The fault that the reference was selected for was canceled. The fault status is no fault found.

Steps

1. Find the work package. See *Find a work package*.

2. On the **Work Package Details** page, **Workscope** tab, consult the **Approval Status** column.

Find MOC authorization number for deferral reference

When maintenance controllers approve the use of a reference to defer a fault, CAMO generates an MOC authorization number. If you need to enter a deferral reference in the logbook, you can find the authorization number.

Steps

1. Find the work package. See *Find a work package*.
2. On the **Work Package Details** page, **Workscope** tab, click the name or ID of the fault whose **Deferral Request Status** is APPROVED.
3. On the **Fault Details** page, **Fault Information** tab, **Fault Details** area, view the **Reference** and the **MOC Authorization** number.

> **Note** If more than one reference is selected for a fault (for example a deferral reference and later a repair reference), the MOC Authorization field shows the most recent reference authorization number. On the Fault Information tab > Fault History area, you can see the authorization number that was generated when MOC approved use of a deferral reference.

Deferring faults

Maintenance technicians regularly defer faults from the current work package. You can also defer open faults outside of work packages.

> **Note** All of the information in this topic describes the 'select reference' workflow in CAMO and does not apply to faults deferred by selecting the 'Log fault and defer' option or using the 'Defer Fault' button.

To defer a fault, you begin by selecting a deferral reference. If the reference requires authorization from maintenance control before you can use it, an authorization request is automatically sent to maintenance operations control (MOC). After approval, the fault is either deferred automatically or you do a job stop. The workflow for deferring a fault is as follows:

- Technician selects a deferral reference. Deferral references are usually entries from the MEL or CDL manual, although deferral references can be created from other approved sources. If you search, but do not find a reference, enter it manually, but note that after the fault is deferred, any follow-on tasks must be manually initiated.
- Technician reviews decision support information about the fault, aircraft, and the deferral reference. This information includes any operational restrictions and performance penalties

that apply to deferral of the fault, other open deferrals for the aircraft, upcoming flights for the aircraft, and aircraft capabilities and capability levels, applicable follow-on recurring inspection tasks, etc. Based on this information, the technician decides whether to proceed with the deferral.

- If the deferral reference requires MOC authorization (most do), a reference authorization request is displayed on the Pending Reference Approvals list.
- MOC reviews the selected reference and checks for potential impacts against the aircraft's schedule or other operating constraints. If an alternative reference is more appropriate, the controller can change the deferral reference before approving the request. To conclude the review, the controller does one of the following:
  - Approves the request, which generates an authorization number.
  - Rejects the request, so that the fault remains open in the work package.
- Technicians can monitor the status of reference authorization requests on the following pages:
  - Work Package Details page > Workscope tab.
  - Task Details page > Fault Information tab.
- After MOC approval or if the reference didn't require authorization, the technician defers the fault by doing a job stop, recording any maintenance actions, and electronically signing the deferral. If there are multiple IN WORK labor rows, the fault is deferred when the last row is job stopped. When deferring a fault, technicians cannot click Finish on the Work Capture page.
- Alternatively, your system might be configured to automatically defer faults after MOC approves the selected deferral reference. In this case, if one or more labor rows are in IN WORK status, technicians job stop the rows before selecting deferral references.

When faults are deferred the following results occur:

- CAMO removes the fault from the work package. It can be assigned to a later work package.
- If a deferral reference was used and if the reference linked to follow-on recurring inspections, CAMO initiates applicable recurring inspections. In rare situations, the follow-on tasks cannot be initiated automatically. In this case, a warning informs technicians that follow-on tasks must be manually initiated. This can happen if the follow-on task is not a FOLLOW type requirement and the same requirement is already initialized for another fault on the same aircraft.
- On the Task Details page, Fault Information tab > Selected Reference area, information about the deferral reference is removed because it is no longer the currently selected reference. The deferral reference and MOC authorization number are displayed on the Task Details page, Fault Information tab, Fault Details area. When deferral references are approved by MOC, CAMO adds a note with the reference name and authorization number to the fault history.

Note A maintenance controller can enter default corrective action text that is associated with each deferral reference and used when approving and immediately deferring the fault. This expedites the flow for maintenance operations control (MOC). The controller can also edit the name and description of a fault from the Pending Reference Approvals page. Further, the controller can approve and immediately defer the fault out of its work package.

Related concepts

Recording work on tasks and faults

Defer a fault

You start the fault deferral process by selecting a deferral reference. If the reference requires maintenance operations control (MOC) authorization, a request for authorization is submitted. After the reference is approved, you job stop the labor row on the fault (unless the fault is deferred automatically when MOC approves the reference).

About this task

If a fault already has a DEFER status, you cannot select a deferral reference for it. Also, you cannot defer a task and its subtasks that are IN WORK. You need to ensure that all labor assignments of the given task and all its subtasks are paused or completed before you defer the task.

Steps

1. On the **Work Package Details** page, **Workscope** tab or **Assigned Tasks** tab, select a fault.
   You can only select one fault at a time, and the fault status must be OPEN (Active).

   Tip You can also perform the remaining steps from the details page of the fault.

2. Click **Select Reference**.
3. (Optional) On the **Select Reference** pane, to filter the list, select a reference type from the **Type** list.
4. On the **Reference** box, start typing the deferral reference name or code. When you see the reference in the list, select it.

Note If you cannot find the reference that you need, you must enter it manually: Go to the Fault Details page, Task Execution tab and click Job Stop. Then on the Work Capture page, Corrective Actions area, Reference field, enter the reference. After the fault is deferred, you must initiate any follow-on tasks manually.

Tip If using a mobile device: for step four, turn the device to portrait view. Otherwise the keyboard blocks your view when you try to select a reference from the list.

5. (Optional) Select a **Reason** from the list.
6. (Optional) In the **Notes** box, type any additional information you want the Maintenance Controller to see when reviewing the request, for example, more details about why you are asking for the fault to be deferred.
7. Review the **Decision Support** information, and click **OK**.

Tip To clear a selected reference (before a fault is deferred), on the Task Details page, Fault Information tab, Selected Reference area, click the **Clear Reference** button.

If the reference requires MOC approval, an authorization request is listed on the Pending Reference Approvals page.

8. Monitor the status of the authorization request here:
   - On the **Work Package Details** page, **Workscope** tab.
   - On the **Fault Details** page, **Fault Information** tab, **Selected Reference** area. After the reference is approved, you can see the authorization number.

Note If faults are deferred in your organization when MOC approves the selected deferral reference, then omit the remaining steps.

9. When the reference is approved, go to the **Fault Details** page, **Task Execution** tab, **Labor** area.
10. In the labor row, click **Job Stop**.
11. On the **Work Capture** page, record relevant information and click **OK**.

Note In line maintenance, typically a fault has one ACTV labor row that isn't started prior to job stopping. If there are multiple IN WORK labor rows, the fault is deferred when the last remaining IN WORK row is job stopped.

Find MOC authorization number for deferral reference

When maintenance controllers approve the use of a reference to defer a fault, CAMO generates an MOC authorization number. If you need to enter a deferral reference in the logbook, you can find the authorization number.

Steps

1. Find the work package. See *Find a work package*.
2. On the **Work Package Details** page, **Workscope** tab, click the name or ID of the fault whose **Deferral Request Status** is APPROVED.
3. On the **Fault Details** page, **Fault Information** tab, **Fault Details** area, view the **Reference** and the **MOC Authorization** number.

> **Note** If more than one reference is selected for a fault (for example a deferral reference and later a repair reference), the MOC Authorization field shows the most recent reference authorization number. On the Fault Information tab > Fault History area, you can see the authorization number that was generated when MOC approved use of a deferral reference.

Defer scheduled maintenance

About this task

You can defer maintenance tasks from a work package by unassigning routine tasks that are not needed, and by deferring faults, and then unassigning them.

Before you defer a non-routine, or fault, you must first determine that the fault can be deferred and for how long, by consulting the operational restrictions.

Steps

1. Find the work package. For more information, see *Find a work package*.
2. On the **Work Package Details** page, **Assigned Tasks** tab, select a fault, and then click **Defer Fault**.
3. On the **Defer Fault** page, select a **Fault Severity** and provide the requested information.
4. Click **OK**.
5. If prompted, enter your user name and password, and then click **OK**.

Phone up deferral

When a technician encounters a fault, needs to act quickly, or doesn't have access to CAMO, the technician can call maintenance operations control (MOC). A controller can raise a fault on behalf of the technician, and authorize its deferral.

The Phone Up Deferral screen helps maintenance controllers and mechanics make decisions. This screen provides you with an all-encompassing status of the aircraft, including open and deferred faults, so you can quickly make decisions without the need to view other screens in CAMO.

Phone-up deferral might be used when technicians are located in stations away from the main base of operations. Phone-up deferral supports the following workflows:

- Authorize a deferral.
- Raise a fault and leave it open.

You must complete all of the fields on the Phone Up Deferral screen. The Aircraft, Deferral Reference, and Failed System fields use full text search. For example, if you enter "24" in the Failed System field, the following results are all displayed:

- 24-10-00 Air conditioner B
- 24-10-01 Air conditioner A
- 15-24-00 Heater
- 72-10-01 Engine 24

The following table describes the Phone Up Deferral fields in detail:

Field	Description
Aircraft	This field displays the unique registration number of all aircraft configured in an operator's fleet in CAMO. When you select an aircraft, the Decision Support pane appears. This pane displays the following: • Open and Deferred Faults • Completed Faults • Upcoming Flights, Capabilities and Capability Levels **Open and Deferred Faults** The open and MEL-severity deferred faults for the aircraft are displayed, with deferred faults shown first. The following information is displayed: • Fault name • Deferral reference • Due date and time • Failed System • Status (including fault severity and deferral class) **Completed Faults** Faults that have been completed in the last 10 days are also displayed here. The following fault information is displayed: • Fault name • Completed date • Failed system • Status You can also filter the list of completed faults by failed system. Enter a partial or complete ATA code to filter the list. **Upcoming Flights** The Decision Support pane also displays the following information regarding upcoming flights, sorted by departure date/time: • Flight number • Departure information (including departure time, airport code, and gate) • Arrival information (including arrival time, airport code, and gate) • Capabilities

Field	Description
Deferral Reference	The purpose of this field is to indicate the reference used to justify a deferral. It displays all active deferral references configured for the aircraft assembly or sub-assembly selected in the Aircraft field. However, it displays neither inactive deferral references nor deferral references for other aircraft types or sub-assemblies not attached to this aircraft. When you enter a deferral reference, Deferral Reference decision support pane is displayed to help you make decisions. The pane contains the following information related to the selected deferral reference: • Deferral Reference • Assembly Type • Operators • Requires MOC Authorization • Status • Description • Failed System • Applicability Range • Effect on Capability • Severity • Class • Number Installed • Required for Dispatch • Deadline (only applicable for MEL-type Deferral References) • Conflicting Deferral References • Associated Deferral References • Recurring Inspections • Operational Actions • Maintenance Actions • Performance Penalties

Field	Description
Logbook Description	When a fault is entered in a logbook, the Fault Description field provides details of the fault written by a mechanic. The purpose this field is to capture detailed information regarding the fault exactly as it has been written in the aircraft's logbook. You can enter up to 3600 characters in this field. The first 80 characters you enter in this field will be used to populate the fault name in CAMO when the fault is deferred or created.
Logbook Reference	This field is used to capture the reference to the logbook entry. You can enter up to 80 characters in this field.
Found By	This list displays the HR code, last name, and first name. It is used to identify the CAMO user -- typically a pilot or mechanic -- that found the fault. As you type in this field, users that match your entry are displayed in the list. Note that the API_USER_ACCOUNT_REQUEST permission is required to search for users.
Fault Source	This list displays the source of the fault. For example, the aircraft logbook.
Found On Flight	This list is used to identify when the fault was found. The last completed flight and the next upcoming flight (if applicable) are displayed in this list. "No Flight" is also an option in this list. Use this option if the fault was discovered outside of a scheduled flight. For example, you can use this option if the fault is found during transit (Ground Finding), or during a walkaround inspection.

Note

- The Found on Date reflects the time the Authorize Deferral button was clicked.
- All time zones recorded are based on the CAMO system time rather than the arrival airport.
- Recurring faults and fault definitions are not utilized in the Phone Up Deferral workflow.
- Maintenance operations controllers initiating a deferral from the IFS Cloud Mobile Maintenance application are also directed to the Phone Up Deferral page in Maintenix. On authorizing the deferral of a fault that originated from Mobile Maintenance, the fault is raised and deferred in Maintenix.

Defer a fault over the phone

When talking to a mechanic on the phone or radio, you can quickly defer a fault.

Steps

1. Do one of the following:
   - On your to-do list, click **Phone Up Deferral**.
   - Click the **Administrator** menu > **Phone Up Deferral**.
2. In the **Aircraft** field, enter the aircraft tail number.
3. Complete the remaining fields as required.

   For more information on these fields, see *Phone up deferral*.
4. Click **Authorize Deferral**.

   A confirmation window appears displaying the following:

   - Deferral authorization number.
   - Barcode for the deferred fault in CAMO
   - Deferral due date
5. In the confirmation window, ensure that the information you've added is correct and then click **Close**.

   The following events occur when the fault is deferred:

   - CAMO creates a logbook fault and sets the status to *defer*.
   - The due date for the fault is calculated using the current date, even if the Found on Flight date is a different date.
   - If the fault is deferred using a task definition that is linked to a recurring task, an actual of that task is created on the aircraft.
   - The created recurring inspection actual is scheduled from the deferral date.
   - Recurring tasks that are initialized from deferral references are terminated when the fault is certified.
   - The MOC Authorization number is displayed on the Fault Details > Fault Information > Fault Details area.

Raise a fault over the phone

When talking to a mechanic on the phone or radio, you can quickly raise an open fault.

About this task

After you do this, CAMO will do the following:

- Raise a fault and set its status to ACTV.
- Request a part or parts (if required).
- Place the fault in an available IN WORK work package, or create an IN WORK work package if one doesn't already exist.
- Set the fault severity to AOG.

Steps

1. Do one of the following:
   - On your to-do list, click **Phone Up Deferral**.
   - Click the **Administrator** menu > **Phone Up Deferral**.
2. In the **Aircraft** field, enter the aircraft tail number.
3. Complete the remaining fields as required.

   For more information on these fields, see *Phone up deferral*.
4. Click **Raise Open Fault**.

   An alert appears indicating that an Open fault was raised, and the alert displays the following information:

   - Fault name
   - Fault barcode
   - Work package
   - Line number
   - Actual start date
   - Estimated end date
5. In the confirmation window, ensure that the information you've added is correct and then click **Close**.

Repairing faults

When repairing faults, if references were created by engineers, technicians can select the references, get them approved if required, and use them to sign off on repairs.

If you use references that include follow-on tasks, CAMO automatically initiates these follow-on tasks when fault repairs are completed. If you don't use references, follow-on tasks must be manually initiated and there is a risk of missing important follow-on requirements.

Repair references typically don't require approval from maintenance control, but if they do, a request for authorization is submitted.

If a repair reference is selected, labor skills and steps from the reference are added or appended to the fault. If the reference requires MOC authorization, the labor skills and steps from the reference are not copied to the fault until MOC approves the reference (or an alternative reference) for the fault.

How labor rows from repair references are copied to faults

Labor rows from the repair reference that have the same skill as existing labor rows on the fault are either added to the fault as additional rows OR they replace existing rows, depending on the status of the labor rows.

- Rows from the selected reference replace existing, matching, ACTV labor rows on the fault. If a fault has one ACTV labor row that matches multiple labor rows in the selected reference, the one existing, matching ACTV row is replaced and new ACTV labor rows are added.
- Rows from the selected reference that match existing, IN WORK or COMPLETE labor rows on the fault are added. The existing rows remain untouched on the fault.

This is true for existing labor rows from a different reference or for rows that were added manually.

In labor rows that are replaced, you might see the following changes:

- Estimated duration.
- Whether work requires certification or inspection.
- Scheduled hours for work, certification, and inspection.

How steps from references are copied to faults

Steps from repair references are added to the fault's Task Execution tab, Steps area. The Steps area includes ad hoc steps and steps from repair references with repair reference steps grouped together by reference.

You can see steps from more than one reference if you select one repair reference, but then change to another. In this situation, you mark the steps that the technician no longer needs to perform - from the original reference - as N/A. Likewise, you do the same, if you selected a repair reference for a fault and then decide to defer the fault.

When steps are copied to the fault, they are added in PENDING status unless a step in the repair reference isn't applicable to the fault's inventory. When the fault is added to a work package and the work package is committed, non-applicable steps are marked as N/A.

Steps copied from the reference cannot be edited or deleted, but you can mark them as not applicable. Ad hoc steps are editable and can be deleted.

Select reference for fault repair

When you repair a fault, you can select a repair reference to apply to the fault.

Prerequisite

The fault is in OPEN (Active) status.

About this task

This procedure is for selecting references that exist in CAMO. In step four below, if you cannot find the reference that you need, you must enter it manually: Go to the Fault Details page, Task Execution tab and click Job Stop. Then on the Work Capture page, Corrective Actions area, Reference field, enter the reference.

Step one provides a few starting points for this procedure, but you can access faults from a number of other pages and follow the same steps.

Steps

1. On the **Work Package Details** page, **Workscope** tab, or **Assigned Tasks** tab, select a fault.
   You can only select one fault at a time.

   > **Tip** You can also perform the remaining steps from the details page of the fault.

2. Click **Select Reference**.
3. (Optional) On the **Select Reference** pane, to filter the list, select a reference type from the **Type** list.
4. In the **Reference** box, start typing the repair reference name or code, and then select the reference from the list.

   > **Tip** If using a mobile device: for step four, turn the device to portrait view. Otherwise the keyboard blocks your view when you try to select a reference from the list.

5. (Optional) Select a **Reason** in the list box provided.
6. (Optional) In the **Notes** box, enter any additional information needed.
7. Review the **Decision Support** information, and click **OK**.
   If you need to add damage records or component damage records (before you complete the repair task) you see a reminder message.

If the reference doesn't require authorization, you can proceed with the repair. If MOC authorization is required, an authorization request is displayed on the Pending Reference Approvals page. You can monitor the status of the authorization request here:

- On the **Work Package Details** page, **Workscope** tab.
- On the **Fault Details** > **Fault Information** tab > **Selected Reference** area. (If a repair reference is approved, the authorization number is also displayed.)

Tip To clear a selected reference (before a repair is completed), on the Details page, Fault Information tab, Selected Reference area, click **Clear Reference**.

Subtasks on faults

If you don't select references for fault repairs (and the labor skills and steps are not automatically copied to the fault), you can use an alternative manual workflow of adding subtasks to faults to describe the work required to fix the fault.

Technicians can add subtasks when they raise the fault, or the engineer can do so following a review of the fault. Subtasks can be based on job card task definitions, requirements, or can be raised as ad hoc tasks.

Technicians can also create ad hoc repetitive tasks to monitor open faults, for example, to schedule the inspection of a component for which there are concerns, to help determine when the resolution of the fault should be done. You can also add repetitive tasks to a fault that has been addressed, but that has not been completed in CAMO to verify that the work done to address the fault was indeed successful.

Create a fault subtask based on a job card task definition

Use job card task definition based subtasks for faults that require simple corrective actions.

Steps

1. On the **Fault Details** page, **Subtasks** area, click **Create New Subtask**.
2. Select the component for the subtask.
3. Select **Create Task Based on Job Card Task Definition**, the job card, and click **OK**.
4. Review the **Task Definition Details** and click **OK**.
5. If prompted, enter your password and click **OK**.

Create a fault subtask based on a requirement

If your organization allows it, you can create a subtask of a fault based on a requirement. Use requirement based subtasks to create multi-step corrective actions by initiating a single task definition.

Prerequisite

- The requirement must be on condition.
- The requirement must not be assigned to a maintenance program.

Steps

1. On the **Fault Details** page, **Subtasks** area, click **Create New Subtask** ⊞.
2. Select the component for the subtask.
3. Select **Create Task Based on Requirement Task Definition**, the requirement and click **OK**.
4. Review the information on the **Initialize Scheduling** page and click **OK**.
5. Click the down arrow next to the CAMO logo, and then click **Administrator Search** > **Part Group Search**.

Create an ad hoc subtask on a fault

Use an ad hoc subtask on a fault when there is no task definition for the corrective action required.

Steps

1. On the **Fault Details** page, **Subtasks** area, click **Create New Subtask** ⊞.
2. Select the component for the subtask.
3. Select **Create Ad-Hoc Task**, provide the required information, and click **OK**.
4. Click the down arrow next to the CAMO logo, and then click **Administrator Search** > **Part Group Search**.

Create fault thresholds

About this task

You create fault thresholds so that CAMO sends an alert when a specified number of faults occur against a system within a specified number of days. For example, you can create a fault threshold that specifies that if five faults are raised in three days against system 28-00 of a specific assembly, CAMO sends an alert.

Each time a fault is raised, CAMO checks whether a fault threshold has been set for that configuration slot, or any parent configuration slot. If a fault threshold exists, CAMO increments the total of faults. Faults that are designated as No Fault Found, those raised in error, and those that are possible faults are not added to the total number of faults.

You can also create fault thresholds against systems on specific tail numbers by specifying an applicability range in the threshold.

When the fault threshold is exceeded for the specified period of time, an alert is sent to all roles assigned to the alert.

Steps

1. On your to-do list, **Fault Thresholds** tab, click **Create Fault Threshold**.
2. On the **Create Fault Threshold** page, provide the required information. Note the following:
   - **Assembly and System**: Select an assembly and a configuration slot.
   - **Threshold**: Complete the following fields:
     - Enter the number of faults to allow on the configuration slot before the fault threshold is exceeded.
     - Enter the number of days to include when counting the number of faults on the configuration slot.
     - Select the threshold mode: In Fleet mode, the threshold value applies to the entirety of your assets for the assembly selected. For example, send an alert when the sum of faults raised on system 28-00 of all aircraft of type B737 exceeds the threshold. In Assembly mode, the threshold value applies to any single asset of the assembly type. For example, send an alert when the sum of faults raised on system 28-00 of a single aircraft of type B737 exceeds the threshold.
3. Click **OK**.

Record flight disruptions

About this task

You can record flight disruptions including flight delays and cancellations caused by delayed services, slow baggage loading, or aircraft maintenance.

You can record the length and cause of the disruption, the aircraft affected, and, if applicable, the maintenance task or fault that caused the disruption. You can enter flight disruptions manually as a single disruption entry per session or as multiple iterative disruption entries per session, or they can be received by the Flight API from your organization's flight following system.

The Create Flight Disruption function can be accessed from both the To Do List and the Flight Disruption Search page.

Steps

1. On the **Flight Disruption Search** page, click **Create Flight Disruption**.
2. On the **Create Flight Disruption** page, provide the requested information.
3. To finish adding a single disruption record click **OK**.
4. To save the current record and add a new record, click **OK and Add New Disruption**. You will be redirected to a new flight disruption creation view prefilled by details of the previous entry.
5. To clear all information, click **Clear**.
6. To delete a disruption record, select the respective record from the **New Disruptions** list, and click **Delete**.

> **Note** When adding a second disruption record with the same details as the first by using **OK and Add New Disruption**, you will see a warning requesting to proceed with or cancel the disruption record as the previous record will be duplicated.

View flight disruptions

For information about flight disruptions and delays for an aircraft, view its Flight Details page, Flight Disruptions tab. This tab provides information about the type and duration of a delay and associated tasks or faults. You can link from this tab to the details page of specific Flight Disruptions.

Steps

1. To go to the **Flight Details** page for an aircraft:
   - From the **Fleet List**, click an aircraft link, click the **Open** tab, **Open Flights** sub-tab and then click a flight in the **Name** column.
2. On the **Flight Details** page, click the **Flight Disruptions** tab.

6

Production planning and control application

As the hangar aircraft maintenance visit approaches, you organize the project in a production plan. You assess whether you have capacity shortages, or excess capacity during the project, reschedule tasks to shorten the critical path, and more. As you refine your production plan, the Production Planner application (PP&C) updates the sequence of tasks to comply with the dependencies and the date constraints you set.

When the visit is in progress, technicians can record the work they do on tasks in CAMO Module, or technical records personnel can enter that information in CAMO Module on behalf of technicians, and you can refresh the production plan with the latest data in CAMO Module With an up-to-date production plan, you monitor the critical path and detect any capacity issues, and make adjustments to the plan as necessary.

Also, you can create reusable production templates for maintenance visits that you perform regularly. You apply the appropriate template to maintenance visits to quickly create production plans that are organized based on the template.

Clear the java cache before using a new release of PP&C

About this task

If you were informed that a new release of Production Planner (PP&C) is being used within your organization, and you were using an older release of it, it is recommended that you remove PP&C from the java cache on your computer before you begin using the new release, this ensures you have the most recent java libraries required for the application. Your organization might provide you with scripts that do this for you. If not, the steps below explain how to clear the cache.

If you are a new user of PP&C, and you are about to open PP&C for the first time, there is no need for you to clear the cache.

Steps

1. Do one of the following:
   - Open a command prompt window.
   - Click the Windows Start button > **Run**.
   - Click the Windows button and click in the **Search Programs** and **Files** field.
2. Type the following command and press Enter:

   javaws -viewer
3. In the **Java Cache Viewer** dialog box, do the following:

   a) Click **Production Planning and Control**.

   > **Tip** To select more than one application, press and hold the SHIFT key as you click the applications.

   b) Click the **Remove Selected Item** button (**X**).
4. Click **Close**.
   The PP&C applications are removed and the cache is cleared. The next time you access PP&C, the most recent version will be downloaded and installed; this process is seamless and does not require any intervention from you.

Start the Production Planning and Control (PP&C) application

Steps

1. On your to-do list, click **Launch Production Planning and Control**.

   If you are using Chrome or Firefox, and a download notification appears in your browser, click **Keep**.

   Trouble? If you are accessing PP&C in a cloud environment and you see an error message that states "Unable to launch the application," contact your administrator; it might be necessary to change a configuration setting in WebLogic.
2. If you see a dialog box asking you if you want to run the application, click **Run**. This dialog box lists IFS as the publisher of the application.
3. In the Login dialog box, provide the following information:
   - The name of the server hosting CAMO and the port number.
   - Your CAMO user name and password.
4. Click **Login**. The Production Planning and Control Wizard opens.

Production plans and production templates basics

In the Production Planning and Control (PP&C) application, you use production plans and production templates.

You create and use a production plan to organize the execution of a work package that was created for a specific tail number and that is scheduled at a maintenance location. The production plan contains project phases and work areas for grouping tasks, milestones, dependencies between tasks and phases, and non-routine estimates.

Use a production template to create a blueprint for a specific type of maintenance visit that you can apply to several production plans. A production template contains project phases and work areas, milestones, dependencies, non-routine estimation, and preset filters. Production templates can also include templates of the tasks to complete during the visit, called task definitions, and the sequence in which the tasks should be performed, very much like production plans. The differences are that templates do not pertain to a specific tail number, nor do they contain specific dates.

You create templates months in advance of maintenance visits, and you can use them to explore what-if scenarios. For example, you can consider several maintenance locations to assess which one has the most suitable capacity to complete the maintenance visit on time. Templates also include estimates of the non-routine hours likely to be required during the maintenance visit. You can use a single template to plan the work for several different maintenance checks for the same aircraft model; for example, an A check and a C check can be planned in a single template.

For maintenance visits whose workscope will consist of ad hoc tasks exclusively, tasks not created from reusable task definitions. you can create templates that includes phases, work areas, milestones, and dependencies, but not task definitions. When working in a template that does not include task definitions, the Gantt representation of the template in PP&C is empty. However, when you apply the template to a production plan containing ad hoc tasks, you can use the phases, work areas, milestones and dependencies of the template to organize the production plan. When they are used in the production plan, the phases, work areas, milestones, and dependencies are displayed in the Gantt.

Create production plans for projects

To create a production plan for a project, you create a master production plan and add the work package of the project to the master production plan.

Prerequisite

- The work package for the project exists and it has been scheduled to a maintenance location.

About this task

When you create a master production plan, you select the root maintenance location for the plan, usually an airport, the sub-locations to include, for example, only hangars that can share resources rather than all the hangars at the airport, and the time period for which you want to see current and planned work packages.

Steps

1. Start PP&C and log in.
2. On the first page of the **Production Planning and Control Wizard**, select the root location for the master production plan, select **Work with production plans**, and click **Next**.
3. On the second page, select **Create New Production Plan**, and click **Next**.
4. Provide the required information. Note the following:
   - **Horizon**: Enter the number of days, starting today, to include as the planning horizon.
5. On the page that opens, select the sub-locations to include and those to exclude from the master production plan as follows:
   - **Available Locations** list: Select the sub-location(s) to exclude, and click **Hide Selected Locations** >.
   - **Hidden Locations** list: Select the sub-location(s) to include, and click **Show Selected Locations** <.
   - Automatically include all future locations: Select for every sub-location that might be created in the future to be added automatically to the master plan.

   > **Note** New sub-locations are added to the master plan only when you refresh the plan with the most recent information from CAMO.

6. The page that opens shows all of the work packages that are scheduled to start, be in progress, or end during the planning horizon set in the plan, and at the location(s) included in the plan. Select the work packages to include in the master plan by doing the following:
   - Select the **Included** check box for the work package.

     Details about the work package that is highlighted in blue appear in the bottom section of the page.
   - If you want every work package that will be scheduled in the future—and that will be scheduled within the planning horizon—added automatically to the master production plan, select **Automatically include all future work packages at load actuals**.

   > **Note** New work packages are added to the master plan only when you refresh the plan with the most recent information from CAMO.

- If you added more than one work package to the master production plan, click the row of the work package whose production plan you want to see in PP&C.

  The row is highlighted in blue.
- Click **Finish**.

The production plan for the selected work package opens. All tasks in the plan are grouped into the default work area and phase. In the **Table View** on the left side of the screen, expand the phase to see the tasks in the plan. The length of the bars shown in the Gantt represents the tasks' duration.

What's next

You can organize your project by creating project phases and work areas, and assigning tasks to them.

Create production templates

You can create a brand new empty production template by using the PP&C wizard.

About this task

An alternative is to create a template that is based on the production plan of a successful maintenance visit; when you do this, the template contains the project phases, work areas, milestones, constraints, default non-routine phase, preset filters, and the task definitions that were in the production plan.

If the workscope of the project consists exclusively of ad hoc tasks—tasks that are not based on reusable task definitions—you can create a template without task definitions.

Steps

1. Start PP&C and log in.
2. On the first page of the **Production Planning and Control Wizard**, do the following:
   - In the **Location** list box, select the root maintenance location for the template.
   - Select **Work with production templates** .
   - Click **Next**.
3. On the second page, do the following:
   - In the **Assembly** list box, select the correct type of aircraft for the template.
   - Select **Create New Production Template**.
   - Click **Next**.
4. On the third page, provide the information requested, paying particular attention to the following field and click **Next**:
   - **Name**: Enter a name for the template or keep the suggested name as is.

Tip It is advisable to use the term *build* or *draft* in the template file name, until the template is ready to be applied to work packages, to indicate to other users that the template is not yet complete.

5. On the fourth page, do one of the following:
   - To add task definitions to the template, click **Add** .
   - To create a template that does not have task definitions, click **Next** and go to step 6.
6. In the **Block/Requirement Search** dialog box, select the block, requirement and MPC task definitions to add to the template. You can add task definitions that have the Active or Build status in CAMO. Do the following:
   - In the **Search Criteria** area, enter information about the task definitions to find, such as the code and name of the task definition, the class assigned to it, and so on.
   - Click **Search**.
   - In the **Search Results** section, click the task definition to add. Hold Ctrl and click to select several task definitions. Hold Shift to select a range of task definitions.
   - Click **OK**.
   - Repeat until you have added all the task definitions needed, and click **Next**.
7. On the page that opens, select the sub-locations to exclude from the template, for example, line maintenance sub-locations. Do the following:
   - In the **Available Locations** list, select the sub-location(s) to exclude, and click **Hide Selected Location(s)** >.
   - To automatically add every sub-location that might be created in the future to the template, select **Automatically include all future locations**.

     Note New locations are added to the template only when you refresh the template to get the most recent information from CAMO.

   - Click **Finish**.

Create reusable templates from existing production plans

You can save a production plan as a template that you can reuse for future projects for the same type of maintenance and the same type of aircraft. A template includes the project phases, work areas, milestones, constraints, default non-routine phase, the tasks, and preset filters that are in the production plan. You can apply the template to other projects for the same type of work.

Steps

1. Open the production plan.

2. Click **File** > **Export Plan to Template**.
3. On the **Save** dialog box, provide the requested information.

The scope of work covered in templates

The scope of work that is covered in a template consists of all the task definitions that are included in the template.

Only the executable task definitions appear in the Gantt. Executable task definitions are the job card definitions that are included in requirement definitions, and requirement definitions that are defined as being executable and that do not require job cards.

You can add task definitions that are in Build or Active status in CAMO. When you have finished changing the scope of work of the template, you refresh the template to ensure that the all relevant executable task definitions are added to the Gantt.

Add task definitions to the template

While you are defining and adjusting a template, you can add task definitions from the template. You select block or requirement task definitions to add.

Prerequisite

- The task definition is in Build or Active status.

Steps

1. Click **Setup > Block/Requirement List**.

   The **Block/Requirement List** dialog box lists the block and requirement definitions that are currently in the template. Use the **Show** list box to filter the list to see only the task definitions that are in a specific status.
2. On the **Block/Requirement List** dialog box, click Add .
3. On the **Block/Requirement Search** dialog box, enter your search criteria.
4. In the **Search Results**, click the task definition, and click **OK**.

   When selecting block chain definitions, the **Search Results** show both the block chain name, and the name of the individual task definitions of the block chain segments.

   > **Tip** To select multiple task definitions, hold Ctrl as you click the definitions. To select a range of adjacent task definitions in the list, hold Shift, click the first definition of the range, and then click the last definition.

5. Refresh the template.

Remove task definitions from the template

While you are defining and adjusting a template, you can remove task definitions from the template. You select block or requirement task definitions to remove.

Steps

1. Click **Setup > Block/Requirement List**.

   The **Block/Requirement List** dialog box lists the block and requirement definitions that are currently in the template. Use the **Show** list box to filter the list to see only the task definitions that are in a specific status.
2. On the **Block/Requirement List** dialog box, click the task definition to remove.

   > **Tip** To select multiple task definitions, hold Ctrl as you click the definitions. To select a range of adjacent task definitions in the list, hold Shift, click the first definition of the range, and then click the last definition.

3. Click **Remove** .
4. In the confirmation box, click **Yes** to proceed.
5. Refresh the template.

Saving the changes made to a production plan

You must have control of the work package to be able to save the changes you make to the associated production plan.

Steps

Click **File** > **Save Plan**.

Trouble? If the **Save** command is shown in gray, it means that you cannot save because you do not have control over the plan. Click **Take Control Over This Plan/Template**. If the button is gray, another user currently has control; the name of that user appears in the PP&C title bar.

Save a copy of the production plan

You must have control of the work package to be able to save the changes you make to the associated production plan.

Steps

1. With the production plan open in PP&C, click **File** > **Create Copy**.
2. On the **Create Copy** dialog box, provide the information requested, and click **OK**.
   A message box appears indicating the copy was saved. The original production plan remains open.

Saving changes made to template

Prerequisite

You have control of the template.

Steps

Click **File** > **Save Template**.

Trouble? If the **Save** command is shown in gray, it means that you cannot save because you do not have control over the template. Click **Take Control Over This Plan/Template**. If the button is gray, another user currently has control; the name of that user appears in the PP&C title bar.

A message appears indicating your changes were saved.

Save a copy of the template

Prerequisite

You have control of the template.

Steps

1. With the template open in PP&C, click **File** > **Create Copy**.
2. On the **Create Copy** dialog box, provide the information requested, and click **OK**.
   A message box appears indicating the copy was saved. The original template remains open.

Take and release control of production plans and templates

About this task

To save the changes you make to a template, you must have control of the template. To save the changes you make to a production plan, and to publish a plan to CAMO, you must have control of the work package that is associated with the production plan.

The first time you create and save a new template or production plan, you are automatically granted control. If you are working with an existing template or plan, you must take control of it to save your changes, and then release control when you are finished to allow other users to save their changes.

The name of the user that has control appears beside the name of the file name in the PP&C title bar. If another user has control of the template or plan, you cannot take control of it; however, you can still view and work with the template or plan. Some users within your organization might have the permission required to access the Production Planning and Control Management page and release another user's control over a template or plan.

Steps

1. With the template or the production plan open, click **Take Control Over This Plan/Template**  on the toolbar. The button becomes green indicating that you have control of the template or production plan.
2. To release control of the template or plan, click **Release Control Over This Plan/Template**  on the toolbar.

   The button becomes red indicating that you no longer have control of the template or production plan.

Release another user's control of a production plan or template

About this task

If you have the permission to release other users' control of templates or production plans, you can do so from the Production Planning and Control Management page.

Steps

1. In CAMO, select the **PPC Management** menu item.
2. Click the **Release Control** tab.
3. In the table, select the check box for the template and/or production plan.

   > **Tip** For master production plans that include several production plans, there is a line for each of the work packages included, and the name of the work package is shown to help you find the production plan you want.

4. Click **Release Control**.
   Result: The control over the selected template or production plan is removed from the control user.

Refresh templates and refreshing task definition status

You refresh the production planning template to load any changes that were done in CAMO that affect the type of maintenance the template covers.

About this task

When you refresh a template, the following occurs:

- New maintenance locations are added to the template as selected.
- Changes made to task definitions that were already in the template in Build status, are loaded in the template, and visible in the Activity Details View.
- The status of executable requirements and task card definitions—the tasks shown in the Gantt—are updated to their current status in CAMO. For example, if a task card definition is in revision or has been made obsolete, the Activity Details View for that task shows the new status.

  In addition, you can refresh the status of the high-level task definitions that are in the template — the blocks and non-executable requirements—and that you see in the Block/Requirement List.
- New task definitions that apply to the type of aircraft specified in the template are available.

Refreshing the template also updates other items that were updated in CAMO: planning types used for non-routine estimation, capacity patterns used to determine nominal capacity, newly defined aircraft zones, new aircraft condition settings that you can use in technical milestones, and new labor skills your organization offers.

Steps

1. Click **Plan** > **Load Actuals**.

   Only if new maintenance locations were added since the last refresh and new locations are not added automatically, the **New Locations** dialog box opens so that you can select any new locations to exclude from the plan. Otherwise, the template is refreshed immediately.
2. To refresh the status of the block and non-executable requirement definitions—seen in the Block/Requirement List dialog box in PP&C, do the following:
   - Click **File** > **Open Template**.
   - If prompted to save, click **Yes**.
   - On the **Open Production Template** dialog box, select the template (the one that is already open), and click **OK**.
3. Click **File** > **Save Template**.

   Trouble? Is the **Save Template** is shown in gray, it means that you cannot save because you do not have control over the template. The name of the user who has control appears in the title bar. A message box appears indicating your changes were saved.

Remove obsolete task definitions from templates

Prerequisite

- The template is open and you have control over it.
- You have refreshed the template
- Verify with the engineering department that the obsolete task definitions you plan on removing are indeed no longer needed.

About this task

While it is not possible to add a task definition that is obsolete in CAMO to a template, task definitions that are included in templates can become obsolete. Task definitions that become obsolete are not removed from the template in PP&C when you refresh the template. It is possible that an obsolete task definition is still needed for maintenance visits. For example, if your organization uses maintenance programs in CAMO, and a requirement definition included in a maintenance program is made obsolete, but the revision of the maintenance program in which this occurs is not yet active—it is in the process of being revised and approved, for example—the requirement definition still applies to until the time the new maintenance program is activated.

Steps

1. Click **Setup** > **Block/Requirement List**.

   The **Block/Requirement List** dialog box lists the block and requirement definitions that are currently in the template.
2. In the **Show** list box, select **OBSOLETE**. If **OBSOLETE** is not in the list, there are no obsolete task definitions in the template.
3. Click the task definition(s) to remove.

   Tip To select multiple task definitions, hold Ctrl as you click the definitions. To select a range of adjacent task definitions in the list, hold Shift, click the first definition, and then click the last definition.
4. Click **Remove**.
5. In the confirmation box, click **Yes** to proceed or **No** to cancel.
6. Click **File** > **Save Template**.

   If **Save Template** is shown in gray, you cannot save because you do not have control over the template. The name of the user who has control appears in the title bar. A message box appears indicating your changes were saved.

Project phases and work areas

Organize your project by grouping tasks in project phases and work areas in the production plan. Use phases to group tasks according to the type of work they accomplish, for example tasks done during the pre-dock and inspection phases. Use work areas to group tasks that take place in the same section of the aircraft, or section of the hangar area.

To do so you must create the project phases and the work areas in the production plan, and then assign the tasks to the correct phases and work areas. You can have PP&C assign the tasks automatically, assign the tasks manually yourself, or use both the automatic and manual methods.

When you work with a new template or production plan in which you did not create any phases or work areas, PP&C automatically groups all tasks in a default phase called PHASE (unknown) and in a default work area called *WORK AREA (unknown)*. After you create the phases and work areas, and assign all tasks to them, the default phase and work area disappear from the PP&C display.

When you apply a template to a work package in PP&C, the phases and work areas of the template are applied to the production plan associated to the work package. Therefore, it is probable that you create most of the phases and work areas in templates rather than in production plans.

In the Gantt, phases and work areas appear as bars. The length of the bars represents the duration of all tasks assigned to the phase or work area. As work is performed during the maintenance visit, and you refresh the plan with the most recent information about the execution of the work—which you obtain from CAMO—the black completion bar located inside the phase or work area bars, and the percentage value shown next to the bars, are updated to indicate how much of the work is complete.

You can filter the display in PP&C to see only the tasks that belong to specific phases or work areas. Also, you can sort the tasks shown in the user interface to be listed by phases first, then work area, or the reverse.

The high-level flow for working with phases and work areas is as follows:

1. Add the phases and work areas that are appropriate to the maintenance visit you are planning and the type of aircraft. You can add phases and work areas individually, or load them in bulk.
2. Assign the tasks that are in the template or production plan to the correct phases and work areas, either manually or by using the Auto-Assignment feature.
3. Create the dependencies for the phases. You can create dependencies between phases, between a phase and a task, or between a phase and a milestone.
4. Edit the characteristics of phases and work areas when needed.

Phases

The automatic task assignment feature of PP&C uses the task types to move tasks to the correct phases.

The task types correspond to the classes and subclasses of the task definitions in CAMO. Tasks that are not based on a task definition have the Ad Hoc class.

For example, if the project includes a phase during which all the access panels on the aircraft are opened, you would create a phase and assign it the task type MPCOPEN so that all tasks that list and explain which panels to open are grouped within that phase.

Work areas

The automatic task assignment feature of PP&C looks up the zones (or sub-zones) that are assigned to tasks and assigns the tasks to the work areas that have matching zones.

The zones you can assign to work areas in the production plan or template are those that exist in CAMO for the aircraft assembly specified. The available crews are all of the departments of type `CREW` that exist in CAMO, at the locations selected in the template or production plan.

Tip

If you are using master panel card task definitions (MPC) in CAMO to generate open panel and close panel job cards, it is recommended that you create work areas in such a way that each MPC matches only one work area. Otherwise the auto-assignment feature will be unable to assign the open and close panel tasks to the correct work areas.

Each MPC should only include panels that belong to a single work area in PPC. However, a work area can have more than one MPC associated with it. That means that if you create one MPC per aircraft zone, you create a work area for each zone. If you create MPCs for sub-zones, you can either create a work area for each zone (which means that several MPCs are associated to a single work area) or create a work area for each sub-zone (which means that a single MPC definition is associated with each work area).

Create a single project phase

You create project phases to group related tasks according to the type of work they accomplish. You can set up project phases one at a time, or bulk-load multiple phases in a single operation. You can change the properties of a project phase at any time.

Steps

1. On the toolbar, click **Add Phase** .
2. On the **Create Phase** dialog box, provide the required information. Note the following:

- **Code**: Enter a code that is unique among all phases in the current production plan or template.
- **Name**: The name to give to the phase in the Gantt and in the Table View.
- **Expected Start After** and **Expected End Before**: You can use these fields to set date constraints that apply to the phase, for example, to set the earliest date when the work in the phase can start, or to represent the duration you expect for the phase. When the project is in progress, you can compare the real duration of the work in the phase with the expected duration:
  - **Expected Start After**: From the calendar, choose the earliest date when the phase can start. This is a firm constraint; all tasks assigned to this phase inherit the date constraint specified. However, you can specify later **Must Start After** dates for individual tasks in the phase, if needed.
  - **Expected End Before**: From the calendar, choose the date when all tasks included in the phase should be complete. This is a soft constraint that indicates the desired completion date for the phase. If delays risk causing the phase to finish later than this date, the phase is flagged with a warning icon in the Gantt.

3. Click the **Task Types** tab.

> **Tip** Under **Available Phase Task Types**, a folder icon indicates that the task class has subclasses. To see all classes and subclasses, click **Expand All +**.

4. Select the task types to include in the phase by doing one or more of the following:
   - **Available Phase Task Types** list: Select the task type(s) to include, and click **Assign Selected Task Type(s) <**.
   - **Assigned Phase Task Types** list: Select the task type(s) to exclude, and click **Unassign Selected Task Types >**.
5. Click **OK**.

The phase is added, but it is not displayed in the Table View or in the Gantt because it is empty. As soon as you assign a task to the phase, the phase appears in both the Table View and in the Gantt.

Create project phases in bulk

About this task

Create project phases to group related tasks according to the type of work they accomplish. You can set up project phases one at a time, or bulk-load multiple phases in a single operation. You can change the properties of a project phase at any time.

Instead of creating project phases one by one, you can load them in bulk.

Steps

1. Click **Plan** > **Phase** > **Add Phases**.
2. On the **Add Phases** dialog box, type one entry per phase, using the following syntax:
   - Each entry consists of a unique phase code, optionally followed by a colon (:), and the phase name, as shown in the following example: `P1:Phase 1`.

     Note If you choose to enter the phase code only (no phase name), do not enter the colon. PP&C uses the phase code as both the code and the name of the phase. You can edit the phase details at any time.

   - Separate each entry with a comma, as shown in the following example: `P1:Phase1,P2:Phase2,P3,P4`
   - To make PP&C create end-start dependencies between the phases you are loading, select **Also add dependencies in order as activities entered in above field**.
3. Click **OK**.

The phases are added. Any leading and trailing spaces you might have entered, and any entry for which the code already exists in the production plan or template, are ignored.

Create dependencies between project phases

You can set dependencies between project phases, for example, to specify that the inspection phase can only start when the preparation phase is completed.

Steps

1. In the **Table View** or in the Gantt, select the phase, right-click it and select **Edit**.

   Tip To find phases easily, you can do the following:
   - Click the **View** menu > **View by Phase First** to sort the Gantt by phases first.
   - To see only the work areas and phases, hide all tasks in the display by pressing Ctrl and the minus sign key.

2. On the **Phase Properties** dialog box, click the **Dependencies** tab.
3. Do one of the following:
   - If the selected phase can only occur after another phase, click **Add** in the **Previous Activity (From)** section.
   - If the selected phase must be completed before the next phase can start, click **Add** in the **Following Activity (To)** section.
4. On the **Create Dependency** dialog box, provide the information requested:

- **Activity**: Select **PHASE**.
- **Phase**: Select the phase with which you want to create a dependencies.
- **Dependency**: Do one of the following:
  - Select the **START-START** type if the prerequisite phase must be started, but not necessarily completed, before the dependent phase can start.
  - Select the **END-START** type when the prerequisite phase must be completed before the dependent phase can start.

5. Click **OK**.

Create a single work area

Create work areas to group tasks that take place in the same section, or zone, of the aircraft. You can set up work areas one at a time, or bulk-load multiple work areas in a single operation. You can change the properties of a work area at any time.

Steps

1. On the toolbar, click **Add Work Area** .
2. On the **Create Work Area** dialog box, **Details** tab, provide the required information. Note the following:
   - **Code**: Enter a code for the work area that is unique among all work areas in the template.
   - **Name**: Enter the name to show for the work area in the Gantt and in the **Table View**.
3. Click the **Zones** tab.

> **Tip** In the **Available Work Area Zones** list, a folder icon indicates that the zone contains sub-zones. To see all zones and sub-zones, click **Expand All +**.

4. Select the aircraft zone(s) to include in the work area by doing any of the following:
   - Available **Work Area Zones** list: Select the zone(s) to include, and click **Assign Selected Work Area Zone(s) <**.
   - Assigned **Work Area Zones** list: Select the zone(s) to exclude, and click **Unassign Selected Work Area Zone(s) >**.
5. Click the **Crew** tab.
6. Select the crew(s) to include in the work area by doing any of the following:
   - **Available Crew** list: Select the crew(s) to add, and click **Assign Selected Crew(s) <**.
   - **Assigned Crew** list: Select the crews to remove, and click **Unassign Selected Crew(s) >**.

Create work areas in bulk

You create work areas to group tasks that take place in the same section, or zone, of the aircraft. You can set up work areas one at a time, or bulk-load multiple work areas in a single operation. You can change the properties of a work area at any time. Instead of creating project phases one by one, you can load them in bulk.

Steps

1. Click **Plan** > **Work Area** > **Add Work Areas**.
2. On the **Add Work Areas** dialog box, type one entry per work area, using the following syntax:
   - Each entry consists of a unique work area code, optionally followed by a colon (:), and the work area name, as shown in the following example: `WA1:Work Area 1`

     Note If you choose to enter the code only (no work area name), do not enter the colon. The code is used as both the code and the name of the work area. You can edit the work area details at any time.

   - Separate each entry with a comma, as shown in the following example: `WA1:Work Area 1,WA2:Work Area 2,WA3,WA4`
3. Click **OK**.

The work areas are added to the production plan or template. Any leading and trailing spaces you might have entered, and any entry for which the code already exists, are ignored.

Assign tasks to phases and work areas

About this task

PP&C can assign tasks to the correct work areas and phases automatically. Auto-assignment assigns tasks to the work area that includes the aircraft zone specified in the task definition, and to the phase that includes the class or subclass specified in the task definition. Tasks that are not based on a task definition have the AD HOC class. Use auto-assignment when you are setting up a template, or when you are adjusting production plans that include new ad hoc tasks that were added to the associated work packages in CAMO.

The auto-assignment feature assigns only the tasks that are not currently assigned to a phase and work area.

After using the auto-assignment feature, there might be tasks that are not assigned to a phase, to a work area, or to neither, because auto-assignment did not find a suitable phase or work area. You assign these tasks manually. You can also reassign a task to a different phase or work area as you see fit.

Steps

1. On the toolbar, click **Auto-Assignment**. The **Table View** and the Gantt are updated to show the new task assignments.
2. To display only the tasks that are not assigned to a phase, do the following:
   a) On the toolbar, click **Set/Reset Filter**.
   b) On the **Filter Criteria** dialog box, click **Clear All Filters**.
   c) On the **Phases** tab, select all the phases in the **Only Show (Phase)** list, except **PHASE (unknown)**. Press Ctrl as you click to select multiple phases.
   d) Click **Hide Selected Phase(s)** >.
   e) Click **OK**.
3. To assign the tasks to phases, do the following:
   a) In the **Table View** or the Gantt, select the task(s) that you want to assign to a specific phase.
   b) In the toolbar, click **Assign Phase**.
   c) On the **Assign Phase** dialog box, select the correct phase, and click **OK**.
   d) Repeat steps a to c to assign all remaining tasks to phases.
4. Repeat step 2 above to verify that all tasks are assigned to a phase. If tasks are displayed in the Gantt, assign them to the correct phase(s).
5. To display only the tasks that are not assigned to a work area, do the following:
   a) On the toolbar, click **Set/Reset Filter**.
   b) On the **Filter Criteria** dialog box, click **Clear All Filters**.
   c) On the **Work Areas** tab, select all the work areas in the **Only Show (Work Area)** list, except **WORK AREA (unknown)**. Press Ctrl as you click to select multiple work areas.
   d) Click **Hide Selected Work Area(s)** >.
   e) Click **OK**.
6. To assign the tasks to the correct work areas, do the following:
   a) In the **Table View** or the Gantt, select the task(s).
   b) On the toolbar, click **Assign Work Area**.
   c) On the **Assign Work Area** dialog box, select the correct work area in the list box, and click **OK**.
   d) Repeat steps a to c to assign all remaining tasks to work areas.
7. Repeat step 5 above to verify that all tasks are assigned to a work area. If tasks are displayed in the Gantt, assign them to the correct work area(s).
8. Save the production plan or template.

All tasks are assigned to phases and work areas.

Set the expected duration and start of phases

About this task

The expected duration of a phase is the time period covered by the Expected Start After and Expected End Before dates specified for the phase. All tasks assigned to a phase inherit that phase's expected start and end dates, unless you set specific date constraints on individual tasks or dependencies that force the tasks to start later than the phase's expected start date.

Later on, during the execution of the work, you can compare the phases in a plan with the expected duration and scheduling that were set originally to see whether the project is going according to plan.

Steps

1. In the Gantt, right-click the phase and select **Edit**.
2. On the **Phase Properties** dialog box, click the **Details** tab.
3. Click the arrow in the **Expected Start After** field.
4. Choose the start date from the calendar.

   Use the navigation arrows at the top of the calendar to change the month, or click the month name to select from a list. To change the year, click the year displayed to select from a list.
5. Click **None** at the bottom of the calendar to clear the date that is set.
6. To set the time of day, enter the earliest start time in the **Expected Start After** field, using the 24-hour clock, for example 16:00 for 4:00 PM in the afternoon.
7. Choose the latest end date for the phase in the **Expected End Before** field, and click **OK**.
8. Verify the expected start dates by clicking **Show Expected Duration** on the toolbar.

All tasks in the phase inherit the constraints you set and are rescheduled accordingly. The phase is placed as close to the earliest start date specified as possible—dependencies might make it impossible to schedule it exactly at the date selected.

Display the expected duration of phases

About this task

The expected duration of a phase is the time period covered by the Expected Start After and Expected End Before dates specified for the phase. You can compare the expected duration set for phases originally in the plan or template with the phase duration after you adjusted the sequence and scheduling of tasks in the phase. When the project is in progress, you can compare the expected duration of the phases with the real duration of the phases.

The following figure depicts a project phase (the orange bar), its tasks (the blue bars), and the expected duration of the phase (the light-colored background shown behind the phase and task bars). In this example, the tasks are scheduled in such a way that the phase is shorter than it was thought when setting the Expected Start After and Expected End Before dates of the phase.

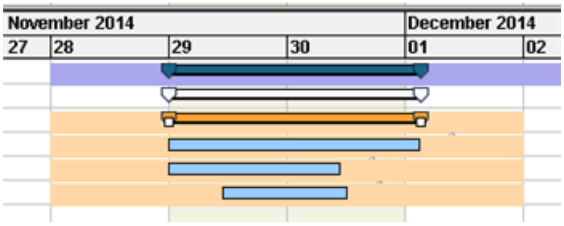

Project phase, tasks, and expected duration

Steps

On the toolbar, click **Show Expected Duration** . In the Gantt, the expected duration of phases appears as a light-colored background behind the corresponding phases and their tasks.

Tip To hide the expected duration, click the button, now called **Hide Expected Duration**, again.

Technical and project milestones

There are two types of milestones you can create in production plans and templates: technical milestones and project milestones.

You create project milestones to indicate when specific accomplishments are achieved, for example, when the inspection phase of the visit is complete. You can then create dependencies between project phases (or individual tasks) and project milestones.

You create technical milestones to identify a change in the state of the aircraft, for example, turning the power off, or placing the flaps at 15 degrees. To place the technical milestones in the correct sequence, you create dependencies between them. The end result is a series of changes in the state of the aircraft that should occur during the execution of the maintenance visit. If a

task depends on a technical milestone, and you want to capture that in the template or plan, you must assign that task two technical milestones, so that the task is between the milestones. It is good practice to ensure that all tasks in a template or a plan are placed between two technical milestones. You can also reschedule a milestone by moving it along the timeline.

You can create milestones of either type individually or in bulk. You can also reschedule a milestone by moving it along the timeline.

Create milestones one at a time

Create technical and project milestones individually, or create multiple milestones in a single operation.

Prerequisite

- To create a technical milestone, the aircraft conditions to specify must already exist in the Maintenix database.

Steps

1. On the toolbar, click **Add Milestone** .
2. On the **Create Milestone** dialog box, provide the information requested:
   - **Code**: Enter a code that is unique among all milestones in the template.
   - **Name**: Enter the name of the milestone as you want it to appear in the Milestone Summary.
   - **Condition**: When creating a technical milestone, select the aircraft component or system to which the milestone relates. When creating a project milestone, do not select a value in this field.
   - **Setting**: When creating a technical milestone, select the state to which the selected component or system must change for this milestone. When creating a project milestone, do not select a value in this field.
3. Click **OK**.

The milestone is created. The milestone marker appears in the **Milestone Summary** above the Gantt, and in the **Table View**. When you first create a milestone, the marker is at today's date. PP&C automatically updates the date of a milestone when you associate the milestone with one or more tasks.

Creating milestones in bulk

You can load milestones in bulk instead of creating them one by one. When loading milestones in bulk, you set only the milestone code and name. If you want the milestones to be technical milestones—milestones that have a condition setting—you can load the milestones in bulk, and then edit each milestone individually to add the condition setting.

Steps

1. Click **Plan** > **Milestone** > **Add Milestones**.
2. On the **Add Milestones** dialog box, type one entry per milestone, using the following syntax:
   - Each entry consists of a unique code, optionally followed by a colon (:), and the milestone name, as shown in the following example: `M1:Milestone 1`

     Note If you choose to enter the code only (no milestone name), do not enter the colon. The milestone code is used as both the code and the name of the milestone. You can edit the phase details at any time.

   - Separate each entry with a comma, as shown in the following example: `M1:Milestone 1,M2:Milestone 2,M3,M4`
   - If you want to add end-start dependencies between successive milestones you are loading, select **Also Add Dependencies In Order, as activities entered in above field**.
3. Click **OK**.

The milestones are added. Any leading and trailing spaces you might have entered, and any entry for which the code already exists in the production plan or template, are ignored.

Add project milestones dependencies to phases and tasks

You can create dependencies between project phases (or individual tasks) and project milestones.

Steps

1. In the **Table View**, select the milestone.
2. Right-click the milestone and select **Edit** .
3. On the **Milestone Properties** dialog box, click the **Dependencies** tab.
4. Do one of the following:
   - To set a dependency with a task or a phase that must precede the milestone, click **Add** in the **Previous Activity (From)** section.
   - To set a dependency with a task or a phase that can only happen after the milestone is reached, click **Add** in the **Following Activity (To)** section.
5. On the **Create Dependency** dialog box, provide the information requested:
   - Activity: Select **PHASE** or **TASK**.
   - Depending on your selection, the next list box is called **Phase** or **Task Code**. Select the phase or the task.
   - Dependency: Select the **END-START**.
   - Delay (h): If needed, type the number of hours that must elapse between the prerequisite activity and the dependent activity.

Add and sequence technical milestones

To place the technical milestones in the correct sequence, create dependencies between them. The end result is a series of changes in the state of the aircraft that should occur during the execution of the maintenance visit.

Steps

1. In the **Table View** or in the Gantt, select a milestone.
2. Right-click the milestone name and select **Edit** .
3. On the **Milestone Properties** dialog box, click the **Dependencies** tab.
4. Do one of the following:
   - If the milestone can only occur after another milestone, click **Add** in the **Previous Activity (From)** section.
   - If the milestone must be achieved before the next milestone can occur, click **Add** in the **Following Activity (To)** section.
5. On the **Create Dependency** dialog box, provide the information requested:
   - **Activity**: Select **MILESTONE**.
   - **Milestone**: Select the milestone with which you want to create a dependency.
   - **Dependency**: Select **END-START**.
6. Click **OK**.

   The dependency is added to both milestones, and they are placed in the correct position relative to one another in the sequence of changes to the aircraft state.
7. Repeat for all other technical milestones in the template.

> **Tip** If you ever need to delete a milestone, you must first delete all of the dependencies the milestone has to other activities. On the Dependencies tab of the **Milestone Properties** dialog box, select the dependency and click **Remove**.

Place tasks between technical milestones

If a task depends on a technical milestone, and you want to capture that in the template or plan, you must assign that task two technical milestones, so that the task is between the milestones. It is good practice to ensure that all tasks in a template or a plan are placed between two technical milestones.

Steps

1. Select the task(s) that belong between two specific technical milestones.

Tip To find subsets of tasks that match a certain criteria, click **Set/Reset Filter** on the toolbar; the filter feature lets you create complex filtering criteria. To find a single task, you can also press Ctrl+F and type the name of the task.

2. On the toolbar, click **Assign Start and End Milestones** .
3. On the **Assign Milestones** dialog box, select the technical milestones to use as the start and end milestones for the selected task(s).
4. Click **OK**.

The selected tasks are between technical milestones. PP&C assigns the milestones to the tasks by creating end-start dependencies between each task and its milestones.

Rescheduling work packages: how it affects production plans

When you change the start date of a work package, for example, when the aircraft arrives a few days earlier or later than planned, the production plan is updated as follows:

- The plan shifts in the timeline to the new start date. The expected start date of each project phase is updated in relation to the new work package start date. That is, if a phase was expected to start on February 16, three days after the originally planned start date of the work package, and that work package is scheduled to start two days earlier, the phase's start date moves to February 14.
- The start date of tasks is updated relative to the new work package start date.
- If date constraints are assigned to individual tasks—the constraints called the Must Start After and Should End Before—they remain unchanged; some organizations use the Must Start After date to represent the date when the required parts will be available. The material availability date is not likely to change even if the work package is scheduled a few days earlier or later; therefore, the dates remain unchanged. If you want the date constraints to be in line with the new start date of the work package, update the constraints manually in the task properties in PP&C.
- The milestones are moved appropriately in the plan according to the new start date.

Specify task dependencies

Make adjustments to a template or production plan by creating dependencies between tasks and other activities.

Steps

1. Select the task.

> **Tip** To find a task, you can set a filter, by clicking **Set/Reset Filter** on the toolbar, or you can press Ctrl+F and type the complete or partial name or barcode of the task.

2. Right-click the task and select **Edit** .
3. On the **Task Properties** dialog box, click the **Dependencies** tab.
4. To create a dependency, do one of the following:
   - If the selected task is the dependent in the dependency, click **Add** in the **Previous Activity (From)** section.
   - If the selected task is the prerequisite in the dependency, click **Add** in the **Following Activity (To)** section.
5. On the **Create Dependency** dialog box, provide the information requested, and click **OK**:
   - **Activity**: Select whether you want to create a dependency to another task, to a phase, or to a milestone.
   - Depending on the choice you made in the **Activity** box, the second list box is called **Task**, **Phase**, or **Milestone**. In this box, choose the correct activity.

     > **Tip** When creating a dependency to a task, you can enter the full or partial barcode, task name, or external key into the **Task** box to find matching tasks.

   - Dependency: Select one of the following:
     - **START-START** when the prerequisite activity must be started, but not necessarily completed, before the dependent activity can start.
     - **END-START** when the prerequisite activity must be completed before the dependent activity can start.

Hangar capacity

Capacity determines how much work can be accomplished at a specific maintenance location, based on the number of labor resources that are available to work, and the skills of these resources. Capacity is displayed in the resource loading graph in PP&C. You filter the total capacity to display only the capacity that matches a specific criteria, for example, the capacity available during a specific date range or capacity that has a specific skill.

To determine the capacity of a maintenance location, PP&C can use planned attendance, nominal capacity, or a combination of both.

Planned attendance is the human resources calendar which names the people who are scheduled to work specific shifts at the location. Planned attendance information comes from CAMO; that

information is added to CAMO either manually, or automatically from an external human resources system that is integrated with CAMO. Usually, planned attendance is set for only a few weeks at a time; to plan ahead of those few weeks, use nominal capacity.

The nominal capacity of your hangar areas is the number and types of resources that are available at a given time; it does not identify the individuals who will provide the capacity. To specify the nominal capacity of the hangar in your PP&C production plans and templates, you do the following:

- Create shifts and capacity patterns in CAMO.
- Assign the capacity patterns to the location in the production plan or template, and specify the time period for which each pattern is valid; for example, you might have a capacity pattern for peak periods during which a lot of projects are completed, and another that includes fewer resources available for use over the holiday season. When the patterns are assigned, you generate unnamed, or virtual, human resources in the production plan or template that are based on the selected patterns and validity periods.
- Adjust the location's productivity factor when needed.

Create work shifts

About this task

A work shift is the amount of time a maintenance staff member spends at work on a given day. In CAMO, shifts are used to determine the nominal capacity of maintenance locations.

Steps

1. On your to-do list, **Shift Setup** tab, click **Create Shift**.
2. On the Create Shift page,provide the required information. Note the following:
   - **Start Hour**: The time of day when the shift starts, using a 24-hour clock—for a shift starting at four o'clock in the afternoon, type 16:00.
   - **Duration**: The total number of hours from the start of the shift to the end of the shift. This can include time spent not working, such as meal time and breaks.
   - **Work Hours**: The number of hours of work performed during the shift duration; this can be less than the duration of the shift. Use the HH:mm syntax when entering the work hours.

   Note CAMO uses the database's time zone. If times are not appearing properly, check with your CAMO representative to see what time zone your database uses.

3. Click **OK**.

Create capacity patterns

Prerequisite

- The work shifts to use in the pattern already exist.

About this task

You create capacity patterns to identify the number of resources, and the types or skills of the resources, that are available in your hangar locations at various periods of the year. After setting up the capacity patterns, you assign them to your hangar areas and specify the time periods for which they are valid.

Steps

1. On your to-do list, **Capacity Pattern Setup** tab, click **Create Capacity Pattern**.

   Tip You can also create a capacity pattern by duplicating an existing one. To do so, select the capacity pattern and click **Duplicate Capacity Pattern**.

2. On the **Create Capacity Pattern** page, provide the information requested, paying particular attention to the following fields, and click **OK**:
   - **Type**: Select either a daily or weekly capacity pattern.
   - **Description**: Enter a description for the capacity pattern.
3. Specify the shifts for the capacity pattern by doing the following:
   - On the **Capacity Pattern Setup** tab, click the link of the capacity pattern you created.
   - On the **Capacity Pattern Details** page, do one of the following:
     - For a weekly capacity pattern, select a day of the week, and click **Edit Shifts for day**.
     - For a daily capacity patterns, click **Edit Shifts for Day**.
4. Specify the labor skills to include in the capacity pattern by doing the following:
   - On the **Capacity Pattern Setup** tab, click the link of the capacity pattern.
   - On the **Capacity Pattern Details** page, click Edit Labor Skills for Capacity Pattern.
   - On the **Edit Labor Skill** page, select the labor skills to add. The page lists only the skills that are assigned to your primary organization in CAMO. Click **OK**.

   Note Labor skills do not display if you have not added any shifts to the capacity pattern.

5. Specify the number of resources available per skill by doing the following:
   - On your to-do list, **Capacity Pattern Setup** tab, click the capacity pattern.
   - On the **Capacity Pattern Details** page, click **Edit Labor Profile**.
   - On the **Edit Labor Profile** page, for each day and labor skill listed, enter the number of licensed and unlicensed resources planned, and click **OK**.

Set up the nominal capacity of locations

Prerequisite

- The capacity patterns already exist.

About this task

Before making adjustments to your production plan or template, set up the maintenance location's nominal capacity—or verify and update if needed—so that you plan with accurate information and do not exceed capacity.

Also, you can set up or update the maintenance location's productivity factor; this value is for information purposes only, but it can help you in planning the schedule of tasks.

Steps

1. Click **Setup** > **Location List**.
2. On the **Location Tree** dialog box, click the location or sub-location in the **Available Locations** list, and then click **Edit Selected Item** .
3. In the **Nominal Capacity (Additive)** area, do the following:
   - In the top list, select the capacity patterns that apply to the location, and click **Add** .

     Tip To add several capacity patterns at the same time, press Ctrl as you click the patterns. To search for a specific capacity pattern, enter the partial or complete pattern name in the Filter List box and click Apply. Only the patterns whose names start with the text you entered are listed. To show all patterns that can apply to the location, clear the Filter List box and click Apply.

   - To remove a capacity pattern from the capacity of the location, select it in the bottom list, and click **Remove** .
4. In the bottom list, set the period of time during which each selected capacity pattern applies by doing the following:
   a) Click the **Effective From** cell for the pattern, and then click the down arrow that appears in the cell.
   b) In the calendar, select the first date of the capacity pattern's validity period.
   c) To set the time of day when use of the capacity pattern starts, click the **Effective From** cell again, and enter the correct time, using a 24-hour clock, over the last four digits shown, for example `17:30` for 5:30 PM.
   d) Click the **Effective To** cell for the pattern, and click the down arrow.
   e) In the calendar, select the last date of the capacity pattern's validity period.
   f) To set the time of day when the use of the capacity pattern stops, click the **Effective To** cell again, and enter the correct time over the last four digits.

5. To create the capacity based on the pattern and add the capacity to the production plan or template, click **Generate** in the **Actions** column.
6. Repeat steps 4 and 5 for all capacity patterns that you want to use, and click **OK**.
7. If your production plan or template includes several locations, repeat these steps to set up the nominal capacity of each of the remaining locations.
8. For the nominal capacity of a location to appear in the **Resource Loading Graph**, do the following:
   a) In the Gantt or the **Table View**, select the top row.
   b) On the toolbar, click **Edit Details**.
   c) On the **Properties** dialog box, select the location in the **What If Location** list box, and click **OK**.

Estimating non-routine work

In your production template or production plan in PP&C, you can generate estimates of the time and types of resources that will be required to address the non-routine work during the maintenance visit. This allows you to plan the project to the capacity available more accurately, thus reducing the risk of capacity shortages. As the project gets underway and real non-routine tasks are added to the workscope, you can compare the estimates with the real numbers to either adjust the plan, or adjust the values used in estimating non-routine in similar projects in the future.

To produce estimates of non-routine work in the production plan, do the following:

- Create planning types.
- Assign the correct planning types to routine tasks in the production template or production plan.
- Generate the non-routine estimation tasks. You can regenerate the non-routine estimation tasks at any time; the existing non-routine estimation tasks are deleted and new ones are created.

In your template or production plan you can designate a project phase as the non-routine phase for all non-routine work in the template or plan, or designate several phases and assign them as non-routine phases for one or more tasks, or for one or several project phases.

When you generate the non-routine estimation tasks, they are placed in the designated non-routine phase of the initiating task—the routine task from which the estimation task is created. If the initiating task does not have a designated non-routine phase, PP&C places the non-routine estimation tasks in the non-routine phase associated with the phase of the initiating task. If the phase of the initiating task does not have a non-routine phase, PP&C places the non-routine estimation tasks in the default non-routine phase of the template.

Non-routine estimation tasks

Non-routine estimation tasks are virtual faults that provide an estimate of the number of hours and the labor skills required to address the non-routine work that is likely to arise during the execution of a routine task, called the initiating task. You generate non-routine estimation tasks in PP&C to add them to the production plan or template. They appear in the Table View and in the Gantt in PP&C. The duration and labor requirements in the non-routine estimation tasks are based on the planning type that is assigned to the task definition on which the task is based, the planning type assigned to the task, or manual adjustments made in PP&C.

PP&C generates non-routine estimation tasks for each task that has a planning type assigned to it, or a custom non-routine factor assigned in PP&C. There is one non-routine estimation task per labor skill of the planning type assigned to the initiating task.

Non-routine estimation tasks are similar to other tasks in PP&C, except for the following:

- You cannot change the phase or the work area that is assigned to the non-routine estimation task; the initiating task's work area and non-routine phase are used for the related non-routine estimation task.
- You cannot set dependencies or date constraints on non-routine estimation tasks; those are inherited from the phase. However, you can reschedule non-routine estimation tasks manually to reschedule them. Also in the Gantt, you can manually extend the duration of a non-routine estimation task to average out the daily resource demand and eliminate spikes in demand.
- You cannot change the priority or the planning type associated with non-routine estimation tasks.
- Non-routine estimation tasks are never published to CAMO, because their purpose is to assist the planning process by taking non-routine work into consideration. They do not serve any purpose on the operational side.

During the execution of the maintenance visit, you periodically update your production plan with task progress. Task progress contains the non-routine tasks that were raised, the number of hours spent addressing them, and the skills that were needed to address them. Consult the non-routine report to compare the real non-routine effort exerted to date with the estimated effort.

Create planning types

About this task

Planning types are required if you want to generate non-routine estimation tasks in a production plan or template.

Steps

1. On your to-do list, **Planning Types** tab, click **Create Planning Types** ⊞.
2. In the **Details** area of the **Create Planning Type** page, provide the required information. Note the following:

- **NR Factor**: Enter the number of hours of non-routine work necessary for every hour of work performed on the initiating task.
- **Fleet Type**: Choose the type of aircraft to which this planning type applies. Note that once a planning type is created, you cannot change its fleet type.

3. In the NR Skills area, do the following:
   - Click **Add Non Routine Skills**.
   - In the **NR Skill** list box, select a skill. By default, the first skill row that appears is assigned 100%; you can adjust this value as needed.
   - In the percent field, enter the percentage of non-routine work that requires the skill you selected.
   - Add other skills and adjust the percentage for each one as needed.

     Tip To remove a skill row, select the row, and click Remove Non-Routine Skill .

   - When you have added all the required skills and adjusted the percentage of each one so that the sum of the percentage values is 100, click **OK**.

     Note If the **OK** button does not appear, and the sum of the skills percentage values is 100, click once outside the % field to apply your latest changes.

Assign or change the planning type assigned to tasks

Before you can generate non-routine estimation tasks, you must assign the appropriate planning type to the routine tasks that are in the template or production plan. You can also change the planning type that is assigned to task when, for example, it is determined that fewer hours of non-routine work are required for a task than was anticipated previously.

Prerequisite

- The planning types already exist in the Maintenix database, and they are associated with the same fleet type as the asset in the production plan or template.

Steps

1. Select the task.

   Tip To find a task, you can use the filter feature, by clicking **Set/Reset Filter** on the toolbar, or by pressing Ctrl+F and entering any text that appears in the template for the task, for example, its name.

2. On the toolbar, click **Assign Planning Type**.
3. On the **Assign Planning Type** dialog box, select planning type.
4. Click **OK**.

Non-routine phases

If you plan on generating non-routine estimation tasks, it is advisable to designate some project phases as non-routine phases in which the non-routine estimation tasks are placed. You can designate a non-routine phase for a specific task, for another project phase—and all tasks in that phase—and as the default non-routine phase to use for tasks that do not have a designated one.

Specify the default non-routine phase for the plan or template

Prerequisite

- The phases you want to designate as non-routine phases exist. If they do not, create them.

Steps

1. In the **Table View** or in the Gantt, select the production plan or the template (the top-level activity).
2. Right-click and select **Edit** .
3. On the **Details** tab, in **Default NR Phase**, select the phase and click **OK**.

Specify the non-routine phase for a project phase

You can select different non-routine phases for each project phase, or use a single non-routine phase for several phases.

Prerequisite

- The phases you want to designate as non-routine phases exist. If they do not, create them.

Steps

1. In the Gantt, right-click the project phase and select **Edit** .

   Trouble? If the phase does not appear in the Gantt, perhaps an active filter is hiding it, or the phase is currently empty. Click the **Set/Reset Filter** on the toolbar to remove any filtering. To see empty phases, click the **Plan** menu > **Phase** >**Edit Empty Phase(s)**, double-click the phase, and go to step 2.
2. On the **Phase Properties** dialog box, **Details** tab, provide the information requested:
   - **NR Phase**: Select a phase.
   - **NR Start Milestone** and **NR End Milestone**: Select the start and end milestone for the non-routine phase.

Specify the non-routine phase for a task

Prerequisite

- The phases you want to designate as non-routine phases exist. If they do not, create them.

Steps

1. In the Gantt, select the task.

> **Tip** To find a task, use the filter feature, by clicking Set/Reset Filter on the toolbar, or press Ctrl+F and enter any text that appears in the task, for example, its name.

2. Right-click the task and select **Edit** .
3. On the **Task Properties** dialog box, **Details** tab, provide the information requested:
   - **NR Phase**: If you want the non-routine estimation tasks generated for this task to be in a different non-routine phase from the one specified for the parent phase of the task, select the correct project phase in the **NR Phase** list.
   - **NR Start Milestone** and **NR End Milestone**: Select the start milestone and end milestone for the non-routine estimation tasks that will be generated for this task.

Generate non-routine estimates

You generate non-routine estimation tasks in new templates or production plans, and also after adjusting non-routine factors in an existing template or production plan. Every time you generate non-routine estimation tasks, PP&C deletes all existing non-routine estimation tasks and recreates them.

Prerequisite

- The planning types are assigned to routine tasks in the plan or template.
- The non-routine phases are specified, if desired.

About this task

> **Note**
>
> When working in a production plan for a project that is in progress, it is advisable to always consult the non-routine report, and make the necessary adjustments before you regenerate the non-routine estimation tasks. Also, it is recommended that you regenerate the non-routine estimation tasks after each shift so that the production plan remains up to date.

Steps

1. In the **Table View** or in the Gantt, select the template or the work package (the top-level activity).
2. To display all tasks, do the following:
   - On the toolbar, click **Set/Reset Filter** .
   - On the **Filter Criteria** dialog box, click **Clear All Filters**, and click **OK**.
3. Verify that you have designated all of the non-routine phases you want.
4. On the **Plan** menu, click **Generate NR Tasks**.

The non-routine estimation tasks are added to the designated non-routine phases. The bars associated with non-routine estimation tasks have a dashed outline. You can reschedule non-routine estimation tasks by moving them in the Gantt. If you select a non-routine task, the number of total hours shown in the **Details** panel on the right is the total estimated number of hours.

What's next

On the toolbar, click Show Non-Routine Report to see detailed information, such as the total number of hours of non-routine work estimated for each skill. You can filter the report to show only the information for a specific phase, work area, or planning type.

Capture non-routine estimates for later comparison

About this task

Before the work begins on a project, you can capture the details of the current non-routine estimates in the production plan. Later, if you make adjustments to the non-routine estimates to take the age of the aircraft into consideration, or when technicians record real hours spent on non-routine work, you can compare the original estimate with the revised one in the non-routine report. You can capture the non-routine estimate at any time to replace the original with the most recent estimate, for example, if you plan on making more adjustments, and want to compare them with the previous estimate.

Steps

1. Click **View** > **Non-Routine Report**.
2. Click **Capture Original Estimates**.

Adjust and regenerate non-routine estimates

About this task

To get non-routine estimates that are as accurate as possible, you can adjust the non-routine factors used in the plan to account for the age or condition of the specific aircraft for which the work package was created. When you adjust the non-routine factor of a planning type in the production plan, the non-routine factor is changed for all tasks in the plan that have that planning type. Also, you can change which planning type is assigned to individual tasks.

After adjusting the non-routine factors, regenerate non-routine estimation tasks. Each time you do, PP&C deletes all existing non-routine estimation tasks and recreates them.

When the maintenance visit starts and you update the production plan with task progress, non-routine work raised and addressed during the visit goes into the appropriate non-routine phases. If you regenerate non-routine estimation tasks regularly during the maintenance visit, you see the non-routine estimation tasks gradually disappear as inspections and routine work are completed; they are replaced by the real non-routines raised during that work. Non-routine tasks are counted against, and they replace, non-routine estimation tasks when the initiating task is completed.

Steps

1. To see how many tasks have a specific planning type, apply a filter to show only tasks with that planning type.
2. In the **Table View** or in the Gantt, select the work package (the top-level activity).
3. Right-click and select **Edit** .
4. On the **Work Package Properties** dialog box, click the **Non-Routine Est** tab.
5. To change the non-routine factor of a planning type, do the following:
   - Double-click the correct cell in the **Custom NR Factor** column.
   - Enter the new non-routine factor.
6. To set the exact number of hours of a specific skill that will be needed to address all non-routine work in the work package, click the correct cell in the **NR (hours)** column in the bottom table. Click **OK**.
7. In the **Table View** or in the Gantt, select the template or the work package (the top-level activity).
8. To display all tasks, do the following:
   - On the toolbar, click **Set/Reset Filter** .
   - On the **Filter Criteria** dialog box, click **Clear All Filters**, and click **OK**.
9. On the **Plan** menu, click **Generate NR Tasks**.

Filtering and finding tasks

There are several ways to find specific tasks, or groups of tasks, within your production plan or template. You can:

- Search for the task name or barcode. When you do this, you can type the complete name or barcode, or part of the name and barcode. The first task found that matches the search text is selected, and you can move to the next task that matches the search text, and so on, until you find the task you want.
- In production plans, you can select a task and quickly find the non-routine tasks that were raised during the execution of that task. Also, if you select a non-routine task, you can find the initiating task for that non-routine task, and any subtasks associated with the non-routine task, for example, corrective actions technicians completed to address the non-routine.
- You can apply a filter to the template or production plan so that only the tasks that match the criteria you select are shown in the Table View and in the Gantt. All other tasks are hidden from view until you clear the filter. You can create complex filtering criteria, for example, to see only the non-routine tasks, or see tasks that are in specific phases, that have a specific status (In Work, Complete, Pause, and so on), that require specific skills, that are on the critical path, and much more.

  If you created baseline snapshots of your production plan before publishing it to CAMO, you can—as the work progresses on a project and you update the plan with task progress—filter the Table View and the Gantt to show only the tasks whose start date or end date deviate from the start date or end date in the baseline snapshot, or to show only the tasks that were added to the workscope after the baseline snapshot was captured.

  Also, you can filter the capacity to show only specific labor resources in the Resource Loading Graph, for example, to show only the capacity available for specified skills, or in a specific crew.

  If you create filters you want to reuse regularly, you add them to the list of preset filters.

Preset filters

Preset filters are reusable filtering criteria you define to display only the activities that are of interest to you in the Gantt in you production plan or template.

Preset filters are saved with the production plan or template, and they are available to any user who opens the same plan or template in the future. When you apply a template to a production plan, the preset filters in the template are available in the plan; any preset filters that were in the production plan are erased and replaced with the ones from the template.

After creating a preset filter, the new filter appears in the list of available preset filters on the PP&C toolbar. You can change the position of the filter in the list or even exclude the filter from the list. You can also edit the criteria of the filter, change the name of the filter, and delete unused or duplicate filters to keep the preset list uncluttered. You create preset filters in one of two ways:

create and name the preset filter and then define the filtering criteria for it, or create a filtering criteria and then save it as a preset filter.

The list of preset filters is a drop-down list box on the PP&C toolbar. To make the list uncluttered and useful, you can change the position of any filter within that list, and select the preset filters to include and to exclude from the list. Excluded preset filters are not visible on the toolbar but they are not deleted. You can still see them and modify them from the Manage Filter Presets dialog box. You can also delete an unused or duplicate filter from the list permanently.

Find tasks by name or barcode

Steps

1. With the production plan or template open, press Ctrl+F.
2. Enter a partial task name or barcode, and press Enter. PP&C selects the first task that matches your search criteria.
3. Press Enter again to select the next task that matches the search criteria, until you find the correct task.

Filtering the demand in production plans and templates

About this task

You filter the demand in a production plan or template to restrict the tasks that are displayed in the Gantt and Table View to those that match the criteria you specify.

To create a filtering criteria, and clear an active filtering criteria, you click the Set/Reset Filter button on the toolbar . When you select the filtering criteria to apply, a one-time filter is applied. This filter will not be available in the plan or template later on, unless you add the filter to the list of presets, and save the plan or template.

When a filtering criteria is in use, the Set/Reset Filter button in the toolbar has a red caution sign applied to it . If you do not see the phase, task, work area or milestone that you are looking for, it might be filtered out. Also, when a filtering criteria is in use, some functionality—such as generating non-routine estimation tasks—is not available.

Steps

1. On the toolbar, click **Set/Reset Filter** .
2. On the **Filter Criteria** dialog box, do one or more of the following:
   - To filter the plan/template to show only tasks that start, are in progress, or end within a specific date range, select **Use Date Range**, and enter the desired start and end dates. A specific date range is only for immediate use to filter the plan or template. If you plan on adding your filter to the list of preset filters, the specific date range is not saved with the filter.

- To filter the plan/template to show only task that start, are in progress, or end within a specific number of days in relation to today, select **Use Days from Today**, and enter the number of days you want to see in the **Show Work in the Last** and/or **Show Work in the Next** boxes.
- To filter tasks based on their phase, work area, zone, characteristics, labor skill requirements, planning types, or assigned crews, do the following:
  - Click the **Demand** tab.
  - Click any of the sub-tabs—**Phases**, **Work Areas**, **Zones**, **Tasks**, **Labor**, **Planning Types**, **Crews**—and select the filtering criteria.

    Tip You can select options from as many of the sub-tabs as needed.

3. Do one of the following:
   - To add the filter to the list of presets so that it can be reused, do the following:
     - Click **Copy to Filter Presets**.
     - On the **Name The Filter** dialog box, enter a name for the filter and click **OK**.
     - To also apply the filter to the plan or template immediately, click **OK**.

       Note The new preset filter is associated with the plan or template. You must save the plan or template for the new preset filter to remain available beyond the end of your PP&C session.

Filter tasks based on their deviation from the dates in a baseline snapshot

If you have created a baseline snapshot of your production plan, you can filter the tasks in the plan to see only those whose start date or end date deviates from the baseline, or only those that were added to the plan after the baseline was created.

Prerequisite

- You have a production plan open; you cannot perform these steps on a template.
- The baseline snapshot is displayed in the Gantt.

Steps

1. If the baseline snapshot is not currently visible, click **Show Baseline** on the toolbar.
2. On the toolbar, click **Set/Reset Filter**.
3. On the **Filter Criteria** dialog box, click the **Baseline** tab.
4. Enter your filtering criteria. You can specify any of the following:

- Show only the tasks whose actual start date is earlier or later than their start date in the baseline snapshot by the number of hours you specify.
- Show only the tasks whose actual end date is earlier or later than their end date in the baseline snapshot by the number of hours you specify.
- Show only the tasks that were added to the workscope after the baseline snapshot was captured.

5. Click **OK**.
   The plan/template is filtered; only the tasks that match the filtering criteria are shown in the **Table View** and in the Gantt. The **Set/Reset Filter** button on the toolbar changes to  to indicate that a filter is applied.

Filter capacity

About this task

You filter capacity to see only specific resources in the Resource Loading Graph in PP&C.

Steps

1. On the toolbar, click **Set/Reset Filter** .
2. On the **Filter Criteria** dialog box, click the **Capacity** tab.
3. Enter your filtering criteria. You can specify any of the following:
   - Show only the available capacity for licensed or unlicensed resources.
   - Show only the capacity for the labor skill(s) you specify.
4. Click **OK**.

Create preset filters

You create preset filters to reuse them as often as needed to filter the activities shown in a production plan or template. After creating a preset filter, the new filter appears in the list of available preset filters on the PP&C toolbar.

Prerequisite

- The production plan is open and you have control of the work package. If you are working in a template, the template is open and you have control of it.

Steps

1. On the toolbar, click **Manage Filter Presets** .
2. On the **Manage Filter Presets** dialog box, click **New**.
3. On the **Name The Filter** dialog box, enter the filter name and click **OK**.

> **Note** The filter name can contain alphanumeric characters, underscores (_), dashes (-) and percent signs (%).

4. With the filter selected on the **Manage Filter Presets** dialog box, click **Edit**.
5. On the **Filter Criteria** dialog box, define the filtering criteria by doing any of the following:
   - To show only tasks whose start and end dates are within a specific number of days relative to today, select **Use Days from Today** in the **Date Range** area, and enter the number of days in the past and the number of days in the future. Specific date ranges set by using the **Use Date Range** option will not be saved in the filter preset.
   - To filter tasks based on their phase, work area, zone, characteristics, labor skill requirements, planning types, or assigned crews, do the following:
     - Click the **Demand** tab.
     - Click any of the sub-tabs—**Phases**, **Work Areas**, **Zones**, **Tasks**, **Labor**, **Planning Types**, **Crews**—and select the filtering criteria.

       > **Tip** You can select options from as many of the sub-tabs as needed.
6. On the **Filter Criteria** dialog box, click **OK**.
7. On the **Manage Filter Presets** dialog box, click **OK**.
8. Click **File** > **Save Plan** (or **Save Template**).

Save filter criteria as a preset filter

You create preset filters to reuse them as often as needed to filter the activities shown in a production plan or template. After creating a preset filter, the new filter appears in the list of available preset filters on the PP&C toolbar.

Prerequisite

- The production plan is open and you have control of the work package. If you are working in a template, the template is open and you have control of it.

Steps

1. On the **Filter Criteria** dialog box, define the filtering criteria by doing any of the following:
   - To show only tasks whose start and end dates are within a specific number of days relative to today, select **Use Days from Today** in the **Date Range** area, and enter the number of days in the past and the number of days in the future. Specific date ranges set by using the **Use Date Range** option will not be saved in the filter preset.
   - To filter tasks based on their phase, work area, zone, characteristics, labor skill requirements, planning types, or assigned crews, do the following:

- Click the **Demand** tab.
- Click any of the sub-tabs—Phases, **Work Areas**, **Zones**, **Tasks**, **Labor**, **Planning Types**, **Crews**—and select the filtering criteria.

> **Tip** You can select options from as many of the sub-tabs as needed.

2. On the **Filter Criteria** dialog box, click **Copy to Filter Presets**.
3. On the **Name the filter** dialog box, enter a name for the filter and click **OK**.

> **Note** The filter name can contain alphanumeric characters, underscores (_), dashes (-) and percent signs (%).

4. On the **Filter Criteria** dialog box, click **OK** to apply the filter, or **Cancel** to exit the dialog box.
5. Click **File** > **Save Plan** (or **Save Template**).

Modify preset filters

You can edit the criteria of preset filters and rename the filters. You must save the production plan or template for the changes you made to be available for future use.

Prerequisite

- The production plan is open and you have control of the work package. If you are working in a template, the template is open and you have control of it.

Steps

1. On the toolbar, click **Manage Filter Presets** .
2. Modify the filter as needed.

To	Do this
Make changes to filtering criteria associated with the filter.	**a.** On the **Manage Filter Presets** dialog box, select the filter and click **Edit**. **b.** On the **Filter Criteria** dialog box, make any change required to the filter and click **OK**.
Change the name of the filter	**a.** On the **Manage Filter Presets** dialog box, select the filter and click **Rename**. **b.** On the **Name The Filter** dialog box, enter the new name for the filter.

3. On the **Manage Filter Presets** dialog box, click **OK**.
4. Click **File** > **Save Plan** (or **Save Template**).

Modify the list of preset filters

Prerequisite

- The production plan is open and you have control of the work package. If you are working in a template, the template is open and you have control of it.

Steps

1. On the toolbar, click **Manage Filter Presets** .
2. On the **Manage Filter Presets** dialog box, do any of the following:

To	Do this
Change the position of a filter on the list.	**a.** Select the filter. **b.** Click **Up** or **Down** to move the selected filter to the desired location in the list.
Include a filter on the list.	Select the filter and click **Include**. *Trouble?* If **Include** is not an option shown on the dialog box, the filter you selected is already included in the list of presets.
Exclude a filter from the list.	Select the filter and click **Exclude**. *Trouble?* If **Exclude** is not an option shown on the dialog box, the filter you selected is already excluded from the list of presets.
Delete a preset filter.	Select the filter and click **Remove**.

3. Click **File** > **Save Plan** (or **Save Template**).

Applying preset filters

About this task

You can apply a preset filter that has been defined and saved with the plan or template.

When a filter is in use, the Set/Reset Filter button in the toolbar has a red caution sign applied to it  . The zoom level is adjusted to show only the portion of the timeline that contains activities that match the filter; the work areas and phases are expanded or collapsed as specified in each preset filter.

If you do not see the phase, task, work area or milestone that you are looking for, it might be filtered out. Also, when a filter is in use, some functionality—such as generating non-routine estimation tasks—is not available.

If the preset filter you want to use compares how actual tasks match a baseline snapshot captured earlier, the baseline snapshot must be displayed in the Gantt for the filter to work properly. To display the snapshot, click Show Baseline on the toolbar.

Steps

1. On the toolbar, select the filter to use in the filter drop-down list. Only the activities that match the filter criteria are visible, and the zoom level is adjusted.
2. To apply the next or previous filter in the list, do the following while a filter is applied to the plan or template:
   - To apply the next filter in the list, click **Next** on the toolbar.
   - To apply the previous filter in the list, click **Previous** on the toolbar.

See only tasks occurring in the next or past few days

You can filter your production plan or template to see the tasks that are occurring during the next few days, or that have occurred during the last few days. The filter finds the tasks that are scheduled to start, be in progress, or be completed in the time period you set, or, when filtering for days in the past, the tasks that started, were in progress, or were completed. You set the number of days in the future and/or in the past for which you want to see the tasks.

About this task

> **Tip** You can include this filtering criteria in a preset filter so that you can find the tasks that match the criteria every day.

Steps

1. On the toolbar, click **Set/Reset Filter** .
2. On the **Filter Criteria** dialog box, in the **Date Range** area, select **Use Days from Today**.

3. In the **Show Work in the Last** and **Show Work in the Next** fields, enter the number of days in the past and/or in the future to use to filter the plan or template.
4. Click **OK** to apply the filter.

Find tasks based on their materials availability

You can display only the tasks that have the same material availability status, for example, display only the tasks for which all materials (parts and consumables) are available, so that you can schedule them for the next shift. Similarly, you can display only the tasks for which not all materials are available, or tasks that do not require any materials.

About this task

Tip In the Gantt, next to the bar of tasks for which the materials are not available, you see the box icon .

You can include this filtering criteria in a preset filter so that you can find the tasks that match the same criteria every day.

Steps

1. On the toolbar, click **Set/Reset Filter** .
2. On the **Filter Criteria** dialog box, on the **Demand** tab, click the **Tasks** tab.
3. In **Materials & Parts**, select any of the following, and click **OK**:
   - **Require Parts**: Shows all tasks that have part requirements.
   - **Do Not Require Parts**: Shows only tasks that do not have any part requirements.
   - **Parts Ready**: Shows all tasks that have part requirements and for which all required parts are available.
   - **Parts Not ready**: Shows all tasks that have part requirements and that have at least one part requirement that is not fulfilled.

The Gantt and the **Table View** only show the tasks that meet the filtering criteria you selected.

Find tasks based on discrepancy between planned and actuals

You can find tasks that have a discrepancy between the planned values and the actual values of the crew or priority assigned to the task . Once you've found these tasks, you can either review the discrepancies or proceed with publishing the plan.

Steps

1. On the toolbar, click **Set/Reset Filter** .
2. In the **Filter Criteria** dialog box, **Tasks** tab, do one or more of the following:

- Select **Task Priority Out of Sync** to view discrepancies between actual Task Priority and planned Task Priority.
- Select **Crew Assignment Out of Sync** to view discrepancies between crew assignment.

> **Note** Selecting both **Task Priority Out of Sync** and **Crew Assignment Out of Sync** shows only tasks that have discrepancies with BOTH Task Priority and Crew Assignment.

See only non-routine tasks

You can filter your production plan so that only the non-routine tasks are visible. You can filter the plan to see all non-routine tasks, see only the ones that have been evaluated, and see only the ones that are awaiting evaluation.

Steps

1. On the toolbar, click **Set/Reset Filter** .
2. On the **Filter Criteria** dialog box, on the **Demand** tab, click the **Tasks** tab.
3. In **Show Faults**, select any of the following, and click **OK**:
   - **All**: Shows all the faults in the plan, and hides all the routine tasks.
   - **Evaluated**: Shows only the faults that are marked as evaluated in CAMO.
   - **Not evaluated**: Shows only the faults that are awaiting evaluation.

Show all paused tasks

You can view all tasks paused by the mechanics, regardless of the reason for pausing the task.

About this task

Tasks that were paused by a technician have the icon next to their task bar in the Gantt. You can filter the production plan to show only tasks that are paused.

Steps

1. On the toolbar, click **Set/Reset Filter** .
2. On the **Filter Criteria** dialog box, on the **Demand** tab, click the **Tasks** tab.
3. In the **Task Status** area, in the **Only Show** list, select all status values shown except **PAUSE**.
4. Click **Hide Selected Task Status** >.

> **Tip** Hold Ctrl as you click to select multiple status values.

5. Click **OK**.

Show tasks paused for a specific reason

When you select a paused task in the production plan, the reason is displayed in the Activity Details View. You can filter the production to show only the tasks that were paused for a specific reason.

About this task

Tasks that were paused by a technician have the icon next to their task bar in the Gantt. You can filter the production plan to show only tasks that are paused.

When pausing a task in CAMO, the technician selects the reason for stopping the work, for example, missing parts.

Steps

1. On the toolbar, click **Set/Reset Filter** .
2. On the **Filter Criteria** dialog box, on the **Demand** tab, click the **Tasks** tab.
3. In **Pause Reason**, select the reason.
4. Click **OK**.

Only the tasks that were paused for the reason you selected are shown in the Gantt.

Find the initiating task of a non-routine

For any non-routine task that is in the plan, you can find the initiating routine task.

About this task

If you record task progress in CAMO and a non-routine is raised from another task in CAMO, for example, from an inspection task, the inspection task is the initiating task associated with the non-routine. If you update the production plan using a spreadsheet rather than recording progress in CAMO, and you associate non-routine tasks to the tasks during which they were found, the associated tasks are initiating tasks.

Steps

1. In the Gantt or **Table View**, select a single non-routine task.

   > **Tip** You can set a filter that only displays the non-routine phases, or a filter that only shows tasks that have the CORR class, which is automatically assigned to faults raised in CAMO.

   If the non-routine task has an initiating task, the **Found During Task** field in the **Activity Details View** shows the barcode of the initiating task.
2. Click the barcode to select the initiating task in the **Table View** and to display the details in the **Activity Details View**.

Find the subtasks of a non-routine

When you select a non-routine task in the plan, you can see whether the non-routine tasks contains subtasks, for example, possible corrective actions technicians created when trying to address the non-routine work.

Steps

1. In the Gantt or **Table View**, select a single non-routine task.

   Tip You can set a filter that only displays the non-routine phases, or a filter that only shows tasks that have the CORR class, which is automatically assigned to faults raised in CAMO.

   If the non-routine task contains subtasks, in the Subtasks field in the **Activity Details View** on the right of the screen shows the barcode of each subtask.
2. Click a subtask barcode to select the subtask in the **Table View** and to display the details in the **Activity Details View**.

Find the non-routine(s) raised during a specific task

In your production plan, you can easily find the non-routine tasks that were raised during the execution of a routine task.

Steps

1. In the Gantt or **Table View**, select a single task.

   If non-routine tasks were raised during the selected task, the barcode of each non-routine task is shown in the **Activity Details View**, in the **Found Faults** field.
2. Click a non-routine barcode to select the non-routine task in the **Table View** and to display the details in the **Activity Details View**.

See only tasks that are taking longer to complete than planned

About this task

You can filter the production plan to show only the tasks that are overbooked—tasks that have more hours of work logged against them by technicians than the number of hours originally planned. When you filter in this way, you set the minimum percentage value by which the hours logged must exceed the hours scheduled for a task to be displayed in the Gantt. For example, specifying 30% shows only the tasks whose hours of work exceed the scheduled hours by 30% or more; specifying 100% only shows tasks for which hours of work are double the scheduled hours.

> **Note**
>
> Entering a negative value does not filter the plan; therefore, the plan shows all tasks, not only the overbooked tasks. Entering a value of zero only shows the tasks with a number of hours worked that matches the scheduled hours exactly.

Steps

1. On the toolbar, click **Set/Reset Filter** .
2. On the **Filter Criteria** dialog box, on the **Demand** tab, click the **Tasks** tab.
3. In **Task Overbooked by (%)**, enter the minimum percentage value by which the hours of work logged must exceed the scheduled hours for the task to appear in the Gantt.
4. Click **OK**.

Clear filters to see the entire plan or template

About this task

When you use a filter in your production plan or template, you can filter the demand, which consists of all activities shown in the Gantt, and filter the capacity of the maintenance location, which is represented in the **Resource Loading Graph**. To display all activities in the plan or template, you clear the filter that is applied to the demand. To display all available capacity in the **Resource Loading Graph**, you clear the filter that is applied to capacity. You can also clear all filters in one operation to see all the activities and all the capacity.

Steps

1. On the toolbar, click **Set/Reset Filter** .
2. Do one or more of the following:

To	Do this
Clear the filter applied to the demand and see all activities in the plan or template	**a.** On the **Filter Criteria** dialog box, click **Clear Demand Filters**. **b.** Click **OK**.
Clear the filter applied to the capacity and see all available capacity	**a.** On the **Filter Criteria** dialog box, click **Clear Capacity Filters**. **b.** Click **OK**.
Clear all filters applied to the plan or template	**a.** On the **Filter Criteria** dialog box, click **Clear All Filters**. **b.** Click **OK**.

Filter Criteria dialog box options

The Filter Criteria dialog box contains four main sections: the Date Range area, the Demand tab, the Capacity tab, and the Baseline tab.

- The Date Range area is used for specifying a date range, or a number of days relative to today's date, for filtering both the Table View/Gantt and the Resource Loading Graph. Only the tasks that are scheduled to start, be in work, or end during the specified date range or number of days are displayed. Note that only number of days relative to today's date can be saved in filter presets, not specific date ranges.
- The Demand tab contains sub-tabs that you use to filter the tasks shown in the Table View and in the Gantt.
- The Capacity tab contains two sub-tabs for filtering the human resources shown in the Resource Loading Graph.
- The Baseline tab contains options for filtering the plan to show only the actual tasks whose start date (and/or end date) differs from the date in the baseline snapshot by a specific amount of time, or to show only the tasks that were added to the plan after the baseline snapshot was captured.

Tip As you choose filtering options in the Filter Criteria dialog box, a text message in the dialog box indicates how many tasks will be filtered out of the display with your current selections, before you apply the filter. Click the correct Clear button in the dialog box to clear all filtering that is set, clear only the demand filter, or only the capacity filter.

Filtering Tasks

The Demand tab contains several sub-tabs with options for filtering the tasks that are shown in the Table View and in the Gantt. The following describes these sub-tabs and the filtering options:

- Use the Phases sub-tab to display only the tasks that are part of the phases you include in your filtering criteria.
- Use the Work Areas sub-tab to display only the tasks that are assigned to the work areas you include in your filtering criteria.
- Use the Zones sub-tab to display only the tasks whose task definition have specific aircraft zones specified.
- Use the Tasks sub-tab to display only the tasks that match one or more of the characteristics described in the following table:

Filtering by Task Characteristics

To display tasks that...	Do this...
Have a specific task code. The task code is the code assigned to the task definition, and for actual tasks based on task definitions, the task code is the first part of the name of the task. For ad hoc tasks, the task name is also used as its code.	Type the correct value in the Code field. You can use the percent sign (%) as a wild card that replaces one or more characters.
Match a task definition name or task name	Type the correct value in the Name field; you can use the percent sign (%), which is a wild card that replaces one or more characters. For routine tasks based on tasks definitions, the task name consists of the *<task definition code> - <task definition name>* For ad hoc tasks and fault, the task name consists of the task name. For non-routine estimation tasks, the task name is **`Non Routine Estimate`** , unless your CAMO administrator configured it differently.
Require more hours or fewer hours than a number of hours you specify.	1- Enter the minimum number of hours in the Min Task Planned Effort (h) box. 2 - Enter the maximum number of hours in the Max Task Planned Effort (h) box.

To display tasks that...	Do this...
Require more labor resources, or fewer labor resources than a number you specify.	1 - Enter the minimum number of resources in the Min # of Resources box. 2 - Enter the maximum number of resources in the Max # of Resources box.
Are approved for execution or are awaiting approval	In Approval Status, select the correct value. To see all tasks, approved and awaiting approval. Select the blank line.
Start or end at a specific milestone. Start before, or end after, a specific milestone. Start at/after a specific milestone, or end before/at a specific milestone.	Select the correct criteria in the top or bottom Show Tasks That: list boxes. Then, identify the correct milestone in the list boxes to the right of the criteria list boxes.
Can be performed only when the aircraft is in a specific condition.	Select the condition in the Require Condition list box, and the select the correct setting for the condition in the second list box.
Have a specific priority level.	Select the level in the Priority list box.
Are paused for a specific reason	Select the reason for pausing the tasks in the Pause Reason list box.
Are part of a specific block or requirement.	Select the correct block or requirement in the Block/ Requirement list box.
Are non-routine tasks, technically evaluated or not	In the Show Faults list box, select whether to display all non-routines, only the ones that have been technically evaluated, or only the ones that have yet to be evaluated.
Are marked to be watched more closely than others.	Select the Watched check box.
Have locked start dates, so that PP&C does not reschedule them.	Select the Pinned check box.
Are late; the tasks that are scheduled to end later than their Should End Before date constraint.	Select the Violates End Before Date check box.

To display tasks that...	Do this...
Have warnings associated with them in PP&C.	Select the Warnings check box.
Are part of the critical path.	Select the Only Critical Path check box.
Are taking more hours to complete than originally scheduled	Enter the minimum percentage by which the actual hours must exceed the scheduled hours in the Tasks Overbooked by (%) field.
Require parts, do not require parts, have all their parts available, or do not have all their parts available	Select the correct option in the Materials & Parts list box.
Have specific task definition class(es) or subclass(es).	1 - Under Class/Subclass, in the Only Show (Class/subclass) list, select the class(es) and subclass(es) to exclude from the display, and click the **>** button. 2 - In the Hide list, select the class(es) and subclass(es) to include in the display, and click the **<** button.
Are in a specific status.	*Only available when working with production plans, not templates. Templates contain task definitions, not actual tasks. Therefore, it is not possible to filter by task status in templates.* 1 - Under Task Status, in the Only Show (Task Status) list, select the task status(es) to exclude from the display and click the **>** button. 2 - In the Hide list, select the task status(es) to include in the display and click the **<** button.

- Use the Labor sub-tab to display only the tasks that have one or more of the following characteristics:
  - Contain at least one labor row for which there is no allocated human resource.
  - Contain human resources assignments in PP&C that are locked and that cannot be reassigned.
  - Have at least one labor requirement for licensed resources.

    Licensed resources are human resources who have a valid license for the aircraft type and the operator. Only licensed resources can perform task certifications and inspections for the specific aircraft type and operator.
  - Contain only labor requirements for unlicensed resources.

Unlicensed resources do not have licenses for the aircraft type. They can perform work on any aircraft type and for any operator, provided their work is certified and inspected by licensed resources.

  - Contain labor requirements for the skills you select.
- Use the Planning Types sub-tab to display only the tasks that have a specific type of non-routine estimation planning value.
- Use the Crews sub-tab to display only the tasks that are assigned to the crews you include in your filtering criteria.

Human resources filter

You restrict the labor resources that are shown in the Resource Loading Graph by using the filtering options on the Capacity tab. When capacity is not filtered, the Resource Loading Graph shows all labor resources defined for the location. Capacity includes both the named labor resources identified in the human resources schedule, and the unnamed resources identified in capacity patterns that are used for planning before the human resources schedule becomes available.

The filtering options are on two sub-tabs:

- The Labor sub-tab, which you use to display only the licensed or unlicensed human resources, and/or those that have the skills you select.
- The Crews sub-tab, which you use to display only the human resources available for specific crews.

Apply a template to a production plan

You apply a template to a production plan to use the template's phases, work areas, milestones, dependencies, recommended sequence of tasks (the order of tasks as scheduled in the template), task priority, constraints, and preset filters to plan the execution of the visit.

Prerequisite

- The master production plan is open, and the correct work package is displayed in PP&C.

About this task

Important

Phases, work areas, milestones, dependencies, preset filters, and the sequence of task that are in the production plan are removed and replaced with the ones from the template.

You can only apply a template that is compatible with the work package in the production plan—one that is for the same aircraft type, and for the same airport location as the work package in the production plan. It is recommended that the template include the task definitions that correspond to the tasks included in the work package. When changes are made to a template that was already applied to a production plan, you can reapply the template to update the production plan accordingly.

When you apply a template to a production plan, non-routine estimate values of the template (planning types and non-routine factors) are applied to the plan, but the non-routine estimation tasks are not added to the production plan. You must regenerate the non-routine estimation tasks in the production plan.

Steps

1. Click **Plan** > **Apply Template** > **Clear all and apply template**.
2. In the **Apply Template** dialog box, select the template to apply, or reapply.

   Note PP&C only lists the templates that are compatible with the production plan.

3. Click **OK**.

Related tasks

Reapply a template to update master panel cards

Reapply a template to update master panel cards

If the current plan already has a template applied to a work package that includes master panel cards, and if the workscope is cleared (which removes the master panel cards from the plan when actuals are loaded) and then generated again (which re-adds the master panel cards to the plan when actuals are loaded), you reapply the current template to the plan. This places the re-added master panel cards in the designated phases.

Steps

Click **Plan** > **Apply Template** > **Reapply current template for MPC only**.

Related tasks

Apply a template to a production plan

Adjusting production plans and templates

Adjusting a template or a production plan manually consists of making changes to make optimum use of the available capacity, and to complete the maintenance visit in the shortest amount of time possible.

The Resource Loading Graph at the bottom of the PP&C screen displays both the demand and the capacity. You can filter the plan or template to restrict the demand and capacity shown, for example, to show only the demand and capacity for specific skills or a date range.

For capacity shortages, or the inefficient use of available capacity, you can add more capacity to the location (and update the nominal capacity to match), reschedule tasks manually, reschedule non-routine work, extend the duration of tasks and non-routine tasks to average out the demand, or do a combination of things. Also, you can change the priority level of any task to help you select which tasks to schedule earlier than others.

As you reschedule or change the duration of tasks, PP&C updates the task sequence and scheduling in the project to comply with dependencies and other date constraints present in the plan. If there are tasks you do not want PP&C to reschedule when you make other adjustments to the plan or template, you can remove or adjust the dependencies and date constraints.

Update nominal capacity

About this task

You update the nominal capacity in your production plan or template when the number of resources that are available at your maintenance location has changed.

Steps

1. Click **Setup** > **Location List**.
2. On the **Location Tree** dialog box, click the location or sub-location in the **Available Locations** list, and then click **Edit Selected Item** .
3. In the **Nominal Capacity (Additive)** area, do the following:
   - In the top list, select the capacity patterns that apply to the location, and click **Add** .

> **Tip** To add several capacity patterns at the same time, press Ctrl as you click the patterns. To search for a specific capacity pattern, enter the partial or complete pattern name in the **Filter List** box and click **Apply**. Only the patterns whose names start with the text you entered are listed. To show all patterns that can apply to the location, clear the **Filter List** box and click **Apply**.

- To remove a capacity pattern from the capacity of the location, select it in the bottom list, and click **Remove** ⛔.

4. In the bottom list, set the period of time during which each selected capacity pattern applies by doing the following:
   a) Click the **Effective From** cell for the pattern, and then click the down arrow that appears in the cell.
   b) In the calendar, select the first date of the capacity pattern's validity period.
   c) To set the time of day when use of the capacity pattern starts, click the **Effective From** cell again, and enter the correct time, using a 24-hour clock, over the last four digits shown, for example `17:30` for 5:30 PM.
   d) Click the **Effective To** cell for the pattern, and click the down arrow.
   e) In the calendar, select the last date of the capacity pattern's validity period.
   f) To set the time of day when the use of the capacity pattern stops, click the **Effective To** cell again, and enter the correct time over the last four digits.
5. To create the capacity based on the pattern and add the capacity to the production plan or template, click **Generate** in the **Actions** column.
6. Repeat steps 4 and 5 for all capacity patterns that you want to use, and click **OK**.
7. If your production plan or template includes several locations, repeat these steps to set up the nominal capacity of each of the remaining locations.
8. For the nominal capacity of a location to appear in the **Resource Loading Graph**, do the following:
   a) In the Gantt or the **Table View**, select the top row.
   b) On the toolbar, click **Edit Details**.
   c) On the **Properties** dialog box, select the location in the **What If Location** list box, and click **OK**.

Synchronizing PP&C with changes made in CAMO

Changes to task priority and crew assignment can be made both within PP&C and in CAMO. When you make changes to crew assignment or task priority that differ from the actuals, they become out of sync. On the Gantt, you will be notified of the discrepancy with the icon.

You can synchronize task priority and crew assignment from actuals when in the Gantt view. If you choose to publish the plan before syncing the changes, you will have the option to disregard the changes.

Synchronize crew assignment discrepancies

When you synchronize crew assignment from actuals, you overwrite the planned data with the actuals data.

Prerequisite

- The work package's status is active.

Steps

1. Click **Plan**.
2. Do one of the following:
   - Click **Sync Undefined Crew Assignment from Actuals** to synchronize only actuals whose crew assignment has not been defined.

     Updates only undefined Crew Assignment values in the plan to the (actual) value in CAMO.
   - Click **Sync All Crew Assignment from Actuals** to synchronize the crew assignment for all tasks.

     Updates the crew assignment in the plan to the same value as that in CAMO.

Synchronize task priority discrepancy

When you synchronize task priority from actuals, you overwrite the planned data with the actuals data. For more information see *Task priority*.

Prerequisite

- The work package's status is active.

Steps

1. Click **Plan**.
2. Do one of the following:
   - Click **Sync Undefined Task Priority from Actuals** to synchronize only actuals whose task priority has not been defined.

     Updates only undefined Task Priority values in the plan to the (actual) value in CAMO.
   - Click **Sync All Task Priority from Actuals** to synchronize the task priority for all tasks.

     Updates the Task Priority in the plan to the same value as that in CAMO.

Task rescheduling

You can reschedule tasks in PP&C by moving them along the timeline in the Gantt, by specifying a specific start date, or by setting the earliest start date. As you reschedule tasks, PP&C makes adjustments to the sequence of tasks to comply with the dependencies set, and updates the demand in the Resource Loading Graph. If you do not want dependent tasks to be rescheduled when you reschedule a task, remove the dependency, then reschedule the task.

When you reschedule tasks manually, the tasks' start date is pinned to prevent PP&C from rescheduling them. You can unpin tasks to let PP&C reschedule them to their earliest possible date.

Reschedule tasks in the Gantt

Reschedule tasks in PP&C by moving them along the timeline in the Gantt. If you do not want dependent tasks to be rescheduled when you reschedule a task, remove the dependency, then reschedule the task.

Steps

1. Select a task in the Gantt.
2. Drag the bar left or right until the start or end date of the task is where you want it to be.

Note When moving a task to an earlier date in the schedule, you cannot do the following:

- Move it earlier than the date the work package was started.
- Move it earlier than the ***must start after*** date set for the task or the expected date start set for its phase.
- Move it earlier than a previous activity with which it has a dependency.

What's next

The task is rescheduled and its start date is pinned. The task is set to start at the quarter hour that is closest to where you stopped dragging it. For example, if you stopped at 12:39, the task is scheduled to start at 12:45.

Dependent tasks and milestones associated with the task may also move to maintain the integrity of the dependencies. The duration of the task's phase and work area may also change with the change in the schedule.

If you unpin the task, it is automatically rescheduled to the earliest possible date.

Note When moving a task to a later date, PP&C lets you move the task without limitations; however, the warning icon appears in the Gantt if you move the task so that it ends after its *should end before* date. The warning message is shown in the Activity Details View (click the Warning heading).

Set specific start date for tasks

About this task

Reschedule tasks in PP&C by specifying a start date. If you do not want dependent tasks to be rescheduled when you reschedule a task, remove the dependency, then reschedule the task.

Steps

1. Select the task in the Gantt.
2. Right-click the task and select **Edit** .
3. On the **Task Properties** dialog box, click the **Details** tab.
4. In the **Start Date** box, click the down arrow.
5. Select the start date from the calendar. Use the navigation arrows at the top of the calendar to change the month, or click the month name to select from a list. To change the year, click the year displayed to select from a list.
6. To set the start time of day, enter the start time in the **Start Date** box, using a 24-hour clock, for example 16:00 for 4:00 PM.
7. Click **OK**.

The task start date is updated, unless other hard constraints make it impossible to start on the selected date, for example, dependencies on another task that itself cannot move because of other hard constraints.

Set the earliest start date for tasks

About this task

Reschedule tasks in PP&C by specifying the earliest date work on a task can start. Use these steps if you know that a task cannot start before a specific date, for example, the date when the required parts will arrive or the date when a resource shortage will be resolved. If you do not want dependent tasks to be rescheduled when you reschedule a task, remove the dependency, then reschedule the task.

Steps

1. Select the task in the Gantt.
2. Right-click the task and select **Edit** .
3. On the **Task Properties** dialog box, click the **Details** tab.
4. Click the arrow in the **Must Start After** field.
5. Choose the start date from the calendar. Use the navigation arrows at the top of the calendar to change the month, or click the month name to select from a list. To change the year, click the year displayed to select from a list.
6. Click **None** at the bottom of the calendar to clear the date that is set.
7. To set the time of day, enter the earliest start time in the **Must Start After** field, using a 24-hour clock, for example 16:00 for 4:00 PM in the afternoon.
8. Optionally, choose the desired end date in the **Should End Before** field.
9. Click **OK**.

The task is rescheduled according to the date you selected. The task is placed as close to the earliest start date specified as possible—dependencies might make it impossible to schedule them exactly at the date selected. A black marker identifies the earliest possible start date and time in the Gantt, in the same row as the task or phase. If you set a Should End Before date, it is shown in the Gantt as a gray marker.

Unpin tasks

When you reschedule tasks manually, the task start date is pinned to prevent PP&C from rescheduling them. You can unpin tasks to let PP&C reschedule them to their earliest possible date.

Steps

1. In the **Table View** or in the Gantt, select the task(s) you want to unpin.

Tip To unpin several tasks that share a characteristic, for example all tasks in a specific work area, or all tasks that require specific skills, filter out all other tasks, press Ctrl+A to select all tasks displayed, and unpin all of them in a single operation.

2. On the toolbar, click **Unpin** . When you select a task that is not pinned, the **Pin/Unpin** button on the toolbar looks like this: .
3. Click **File** > **Save Plan** (or **Save Template**).

Change the duration of tasks

Initially, the duration of tasks in your production plan is set to what is set in CAMO. When you adjust your production plan, you can manually extend or shorten the duration of active, in work, and paused tasks in the Gantt by dragging the left or right edge of the task bar.

Prerequisite

- You are working with a production plan; you cannot change the duration of tasks in templates.

About this task

You can see the number of resources required in the Task Properties dialog box, Labor tab.

When changing the duration by moving the start date, you cannot make the start date earlier than the start date of the work package, earlier than the start date constraints of the task itself or the phase to which it belongs, or earlier than previous activities with which the task has a dependency. When you change the duration by extending the task end date, dependent activities and milestones associated with the task may also move to maintain the integrity of the dependencies. If you do not want the dependent tasks to move when you resize the duration of a task, remove the dependency first, then resize the task duration.

Note You can only change the duration for active tasks.

Steps

1. Find, then select the task by clicking on it.
   Square handles appear on both ends of the task bar. 
2. Place your pointer over one of the square handles until it becomes a double-headed arrow.
3. Drag left or right to adjust the duration of the task.
4. Release the mouse button.

Based on the new duration, PP&C recalculates the number of resources required per skill to complete the work according to the plan.

Reschedule the non-routine estimation task

You can reschedule non-routine estimation tasks in your production plan or template in PP&C by moving them along the timeline in the Gantt. As you reschedule or adjust the duration of non-routine estimation tasks, PP&C updates the demand in the Resource Loading Graph.

Steps

1. In the Gantt, click the bar of the non-routine estimation task.
2. Drag the bar left or right until the start or end date is where you want it.
3. Release the mouse button.

Adjust the duration of the non-routine estimation task

To avoid spikes in the demand for resources, you can adjust the duration of the non-routine estimation tasks. As you reschedule or adjust the duration of non-routine estimation tasks, PP&C updates the demand in the Resource Loading Graph.

Steps

1. In the Gantt, click the bar of the non-routine estimation task.
2. Place the pointer over the square handle at one end of the task bar until it becomes a double-headed arrow.
3. Drag left or right to adjust the duration of the non-routine estimation task.
4. Release the mouse button.

Task priority

Task priority indicates the importance of a task. When there are many tasks to schedule and limited resources, task priority helps crew leads to decide what to do first.

Task definitions that you add to a template have a task priority if one was set when the task definition was created in CAMO. Tasks in the production plan might also have a task priority that was set in CAMO.

As a production planner, you can adjust the priority values that are assigned to any task in PP&C. When you apply the template to a production plan, the task priority values set in the PP&C template are applied to the tasks in the production plan.

When you publish a production plan to CAMO, the task priority values set in PP&C, whether inherited from a template or changed directly in the production plan, overwrite the values in the tasks in CAMO.

When you select a task in the PP&C Gantt or Table View, the Activity Details view displays both planned and actual task priority. Actual is the priority set in CAMO, and Planned is the priority set

in PP&C. For more information on planned and actual task priority, see *Synchronizing PP&C with changes made in CAMO*.

Set task priority

To synchronize the Task Priority values between CAMO and PP&C without overwriting what is currently in CAMO, follow these steps.

Steps

1. Set the priority level of individual tasks by doing the following:
   - In the **Table View** or the Gantt in PP&C, select the task(s).
   - On the toolbar, click **Assign Priority**.
   - On the **Assign Priority** dialog box, select the priority level in the **Priority** box.
2. Save the production plan (or template).

Reschedule milestones

About this task

Rescheduling milestones is most useful if you use project milestones to represent the start or the target completion of a group of tasks, or to represent the start of a shift. Rescheduling milestones also reschedules the tasks that have dependencies to the milestones.

Steps

1. In the **Table View**, click ⊞ next to **Milestones** to expand the list of milestones in the plan or template.
2. In the Gantt, click the blue diamond representing the milestone and drag it to the correct date. If tasks are dependent on the milestone you moved, they are also rescheduled in the Gantt.

Capture baseline snapshots of plans

Baseline snapshots are captured automatically when you publish production plans to CAMO, but you can manually capture snapshots of the current state of your production plan at any time. Then, as work progresses and you load actuals, you can compare updated plans against baseline snapshots.

Prerequisite

To capture all activities in a plan, clear any filters that are applied.

About this task

The snapshot includes the start and end dates for the activities (tasks, phases, work areas, and milestones) and the scheduled hours that are displayed in the plan at the time the snapshot was created.

Steps

1. On the toolbar, click **Set/Reset Filter** .
2. On the **Filter Criteria** dialog box, click **Clear Capacity Filters**, and click **OK**.
3. Click **File** > **Save Plan**.
4. Click **Capture Baseline** on the toolbar.
5. On the **Capture Baseline** dialog box, enter a name for the baseline snapshot.
6. Click **Capture**.

   The activities captured in the baseline appear in the Gantt as gray shadows of those in the production plan. At the moment, the activities in the plan and in the baseline are exactly the same. As you adjust the production plan, you see how it differs from the baseline snapshot you captured by comparing the colored bars to the shadows.

> **Tip** To not see the baseline in the Gantt, click Hide Baseline on the toolbar.

Shift planning

To plan the upcoming few work shifts, you finalize the task scheduling and make that information available to crew leads and maintenance technicians by publishing it to CAMO.

Also, the plan must contain the most recent data for the work package, and updated information about the planned attendance. Before you can make the schedule available to maintenance personnel, you must adjust the plan to manually assign to crews the tasks that are planned for the next shift.

> **Tip** To help in planning shifts, you can filter the plan, for example, to show only tasks that:
> - that are late
> - tasks that require a specific skill
> - tasks that are exceeding the number of hours scheduled
> - and so on
>
> If the plan includes preset filters with different criteria that are of interest to you, you can apply all these preset filters one after the other to quickly find the information.

Publishing your production plan to CAMO does the following:

- Updates the scheduled start date, scheduled end date, and estimated duration of tasks in CAMO for all active, paused, or in work tasks.
- If your organization has configured PP&C so that shift planning is done in PP&C instead of in CAMO, publishing the plan assigns the tasks to crews according to the production plan.

  Only the non-completed tasks scheduled anytime after the start date of the work package up to today's date, and the tasks scheduled to be in work within a specific number of hours into the future, are assigned to the crews in CAMO. The number of hours is configurable and is set to 72 hours by default.
- Updates the task priority in CAMO to the task priority set in the production plan.
- Captures a baseline snapshot of the production plan that you can compare against the actual state of the work as it progresses.

Non-routine estimation tasks generated by PP&C are never published. They are estimates whose goal is to assist in the planning process. Consequently, they are not used within operations.

After publishing, you can access the PP&C daily status report. The report shows the number of routine and non-routine tasks that are open and closed; the number of routine and non-routine tasks that were opened and closed within the last 24 hours; the completion percentage of each milestone and project phase; and lists showing the priority one tasks, the paused tasks, and the watched tasks.

If your crews work with paper job cards, you can print them from PP&C.

Update capacity with planned attendance

Use this workflow to finalize the task scheduling and human resources assignment for the upcoming few work shifts, and communicate that information to maintenance personnel.

Prerequisite

- The planned attendance data that states who is scheduled to work on which shift(s) is accessible to PP&C. This is done either by integrating your organization HR Management system with CAMO, or by setting up the shifts and the shift schedule of technicians in CAMO.
- The master production plan is open, and the correct work package is displayed in PP&C.

About this task

To properly plan the next few shifts, the plan must contain the most recent data for the work package, and updated information about the planned attendance, including which workers who were scheduled will be absent. You must then manually assign the tasks planned for the next shift to crews or human resources.

Steps

1. Click **Setup** > **Location List**.

2. On the **Location Tree** dialog box, select one of the locations shown in the **Available Locations** list, and then click **Edit Selected Item** .
3. Under **Location Capacity**, in the **Real Rosters** table, click **Load**.

> **Tip** If the **Load** button is not shown in the **Real Rosters** table, click **Clear**, and then click **Load**.

> **Note** If the **Real Rosters** table is not displayed, contact your administrator. The configuration parameter for this feature might be disabled.

4. Click **OK** to close the **Location Details** dialog box.
5. Repeat steps 2 to 4 for all other maintenance locations shown in the **Location Tree** dialog box.
6. Click **OK** to close the **Location Tree** dialog box.

Assign tasks to crews

Prerequisite

- The master production plan is open, and the correct work package is displayed in PP&C.
- If the maintenance visit is already in progress—you are not planning the first shift—the plan is updated with the most recent task progress.

About this task

In PP&C, you can assign tasks to any crew that is associated with the work area of the task. Tasks that are in the default work area—the one called WORK AREA (Unknown)—can be assigned to any crew that is assigned to the location where the work package is scheduled. When you assign the task to a crew, all labor requirements in the task are assigned to that crew. To facilitate assigning tasks to crews that specialize in a single skill, it is recommended that different job card task definitions be created for each skill.

When you publish the plan to CAMO, any member of a crew can see the tasks assigned to their crew on the Assigned To Your Crew tab, and can claim the task.

> **Note**
>
> If your organization prefers that the assignment of tasks to crews be done by supervisors or other personnel, who will use the Plan Shift page of CAMO to do so, the functionality to publish the task to crew assignments from the production plan is probably not enabled.

Steps

1. In the **Table View** or in the Gantt, select one or more tasks.

> **Tip** To find the tasks for the next shifts(s), create a filtering criteria to see only the tasks scheduled for the next few days, by clicking **Set/Reset Filter** , and using the **Date Range** options.

2. On the toolbar, click **Assign Crew to Task(s)** .
3. On the **Assign Crew to Task(s)** dialog box, select the correct crew in the **Crew** list box.
4. Click **OK**.

What's next

Detect capacity shortages for the upcoming shifts, and address shortages found by adding capacity to crews or rescheduling tasks.

Addressing capacity shortages for the next shifts

When planning the upcoming shifts, you assess whether the crews to which you have assigned tasks have enough capacity to fulfill the demand. If there is a capacity shortage, you can add resources that are available for the upcoming shifts, and that have the skill(s) needed to meet the demand.

Locations can have crews that are specialized for a single skill and crews that are multi-skilled. Your production plan might have tasks that require human resources that are licensed for a particular operator and aircraft, and tasks that have no licensing requirements. When you detect capacity shortages, it is advisable to first add capacity to fulfill the demand for resources that are the most scarce—resources that are licensed—and then fulfill the demand for more readily available unlicensed resources.

As an alternative to adding capacity, for example if you are unable to find enough capacity to fulfill the tasks that are scheduled, you can reschedule tasks to a later shift. You do so by dragging the tasks to the correct date in the Gantt, or by setting a different start date in the task properties. You can also extend the duration of tasks to lower the demand over a longer period.

Assess crew capacity for the next shifts

To assess whether a crew needs more resources for upcoming shifts, filter both demand and capacity so that the Resource Loading Graph only shows only 1) all tasks that require the skill(s) of the crew and that are assigned to the crew, and 2) the resources that have the required skill(s) and that are already allocated to the crew.

Prerequisite

- The capacity of the maintenance location is updated with the most recent planned attendance information.

Steps

1. On the toolbar, click **Set/Reset Filter** .
2. On the **Filter Criteria** dialog box, click **Clear All Filters**.
3. Filter the demand as follows:
   - Click the **Demand** tab, then the **Labor** sub-tab.
   - To see only the demand for licensed resources, clear the **Unlicensed** check box. To see only the demand for unlicensed resources, clear the **Licensed** check box.
   - Only when assessing the capacity of a specialized crew, in the **Only Show (Labor Skills)** list, select all skills *except* the skill of interest and click **Hide Selected Labor Skill(s)** >.
   - Click the **Crews** sub-tab.
   - In the **Only Show (Crew)** list, select all the crews *except* the one whose capacity you are assessing, and click **Hide Selected Crews** >.
4. Filter the capacity as follows:
   - Click the **Capacity** tab, then the **Labor** sub-tab.
   - To see only the capacity for licensed resources, clear the **Unlicensed** check box. To see only the capacity for unlicensed resources, clear the **Licensed** check box.
   - Only when assessing the capacity of a specialized crew, in the **Only Show (Labor Skills)** list, select all skills *except* the skill(s) of the crew and click **Hide Selected Labor Skill(s)** >.
   - Click the **Crews** sub-tab.
   - In the **Only Show (Crew)** list, select all the crews *except* the crew whose capacity you are assessing, and click **Hide Selected Crews** >.
5. Click **OK**.
6. Consult the **Resource Loading Graph** to detect any time where the demand exceeds the capacity during the upcoming shifts.

   Tip In the **Precision** list box on the left of the **Resource Loading Graph**, select **Day** or **Week** to see only a section of the plan.

7. If capacity is insufficient, add resources to the crew, or lower demand by rescheduling lower priority tasks.

Tip When assessing the capacity of a multi-skilled crew, click the tasks in the **Table View** and the Gantt to see the skills they require in the **Details** panel on the right of the PP&C screen.

What's next

If capacity is sufficient, publish the production plan to CAMO and print the job cards. If there is a capacity shortage, find and add more resources to the crews or reschedule some tasks.

Publish production plans and access the daily status report

Prerequisite

- The production plan is open and you have control of the work package.
- The task priority values are set for all tasks that need one. Either you set them manually on tasks in PP&C, you loaded the task priority from CAMO, or you did a combination of both.

About this task

You publish the production plan to CAMO when the planned start date gets nearer, and regularly during the execution of the work to plan the upcoming shifts. If you work with master production plans that include several production plans for different work packages, you publish each production plan separately.

After publishing, you can access the Daily Status report to see the progress of the project. You can save and print the report.

Steps

1. Click **Plan** > **Publish**.
2. On the **Publish Plan** dialog box, provide the information requested and click **OK**.
3. If you have already published this plan to CAMO, click **Yes** in the confirmation box that opens.

   When the plan is published, the **Publish Summary** dialog box opens. It indicates whether some tasks were not published and why. Examples of tasks that are not published include out of scope tasks—tasks that were in the plan but not in the work package—tasks that are in the plan but that were completed, canceled or terminated in CAMO, and all tasks in a completed work package.
4. On the **Publish Summary** dialog box, click **Daily Status**.

   A browser window opens and shows the PP&C **Daily Status Report** for the project in .pdf format. The report shows the status of the production plan at the most recent time when the plan was published to CAMO.

Trouble? If your session with CAMO expired, you are prompted to enter your user name and password. After doing so, your CAMO to-do list appears. Return to the PP&C window, and click **Daily Status** again to open the report in the browser window.

5. Save or print the report as needed.

What's next

Now is a good time to capture a snapshot of the current state of the production plan so that you can compare it later with the state of the project when you load task progress. If crews use paper job cards, it might also be a good time to print the job cards for the next shift.

Print job cards for the next shift

Prerequisite

- The production plan is open and you have control of the associated work package.
- Although not required, it is recommended that you print the job cards soon after publishing the plan to CAMO so that the printed job cards reflect what crew leads and technicians are seeing in CAMO.

Steps

1. Filter out all tasks for which you do not want to print job cards, as follows:
   - On the toolbar, click **Set/Reset Filter** .
   - In the **Filter Criteria** dialog box, under **Date Range**, select the correct **Start Date** and **End Date**.
2. Click **File** > **Print Job Cards**.

What's next

Now is a good time to capture a snapshot of the current state of the production plan, so that you can compare it later with the state of the project when you load task progress.

Access task details

About this task

In PP&C, you can see details about individual tasks in the Activity Details View, including the following:

- Task barcode and type.
- The task definition on which the task is based, when applicable.
- The actual start and end dates.
- The date constraints.
- The task status.
- The number of hours of work completed, remaining, and in total.
- For paused tasks only, the reason for stopping the task.
- For non-routine tasks only, whether they have been evaluated, and the barcode of the task during which the they were found.
- The phase and work area the task belongs to.
- The aircraft zone where the work is being done.
- Whether there are parts and other materials required for the task, and if so, whether the materials are available.
- A table showing the parts requested for the task whose estimated time of arrival is later than the scheduled start of the task.
- The breakdown of hours per skill.

Also, from the Activity Details View, you can access the task details page in CAMO. This page can include additional details, such as the part and tool requirements, job steps, measurements to take, the names of the technicians who worked on a task, and more.

Steps

1. In the Gantt or in **Table View**, select a single task.

   Details about the task appear in the **Activity Details View** on the right of the screen.

   Trouble? If you do not see the **Activity Details View**, click the left pointing arrow located to the far right of the **Milestone Summary**. If the **Activity Details View** area is visible, but only shows the **Warnings** panel, scroll to the bottom of the **Activity Details View**, and click **Details** to display the **Details** panel.
2. To access the CAMO **Task Details** page, click the task barcode in the **Activity Details View**.

   The CAMO **Task Details** page opens in your browser.

Updating production plans with task progress

When a project is underway, you load the progress made on tasks to keep the production plan up to date. This allows you to make the correct adjustments to avoid resource shortages or delays.

Updating the production plan with task progress does the following:

- Loads the progress recorded for individual tasks into the production plan. Shading in the task bars indicates how much of the work is completed, and the percentage of each task that is complete is shown at the right of the task bars. Icons next to the task bars indicate the tasks that are in work , paused , and completed .
- Updates bars of completed tasks so that they start at the actual start date and end at the actual end date.
- For in work and paused tasks, PP&C does not adjust the task bars to start at the start date. Instead, it keeps the bars where the task were planned to start. You can see the actual start date when you select the tasks in the Gantt or Table View: a shaded bar with a dotted outline appears from the actual start date to the planned start date. Therefore, you can see the difference between the planned and actual start date.
- Loads new ad hoc tasks or non-routine tasks were added to the workscope into the production plan. They are scheduled at today's date or at the scheduled start date for the work package if it is later than today. Corrective actions subtasks associated with the new non-routines are also loaded into the production plan.

  Non-routine tasks that were raised as part of another task, referred to as the initiating task—a routine inspection, for example—are loaded in the non-routine phase associated with their initiating task. If the initiating tasks do not have a non-routine phase, the non-routine tasks are loaded in the default non-routine phase of the production plan, if one is defined. If no default non-routine phase is defined, the non-routines are loaded in the *Unknown* project phase.

  Non-routine tasks that were not raised as part of another task are loaded in the default non-routine phase of the production plan, if one is defined. If no default non-routine phase is defined, the non-routines are loaded in the *Unknown* project phase.

  Corrective actions that are associated with all non-routine tasks are loaded into the *Unknown* project phase so that you can assign them to the correct project phase.
- Next to the task bar of tasks for which there are parts and materials required that are not yet available, shows the box icon .
- Displays any potential delays with ON ORDER part request. When the estimated arrival date is after the scheduled start date of the task, the part request table appears in the details area, under Material Availability.
- Displays tasks that were removed from the work package in the Removed Work section of the Table View.

- For any labor row completed in tasks, deducts the resources that were required for these labor rows from the resource loading graph.

Note

Updating the production plan also updates the work package start date, the sub-location where the work package was scheduled, the list of available crews at the scheduled location, and the labor requirements in the tasks that were already in the plan.

Information about the master production plan in which the work package exists is also refreshed, including the available sub-locations, work packages scheduled at the locations included in the master plan, the skills, the capacity patterns, and the planning types.

Load task progress data from CAMO

Loading task progress from CAMO updates the production plan PP&C with the latest information from of the associated work package in CAMO.

About this task

If you select the production plan in the Gantt or Table View, the last time when task progress was loaded, and how much time has gone by since, are shown in the Activity Details View on the right of the screen.

Steps

1. Click **Plan** > **Load Actuals**.

   Only if new maintenance locations were added since the last update and new locations are not added automatically, the **New Locations** dialog box opens so that you can select any new locations to exclude from the plan.

   Only if new work packages were scheduled within the planning horizon of the master production plan since the last update, the **Work Package List** dialog box opens so that you can select the work package(s) to include in the plan.

   The data in the displayed work package and the information about the master production plan, are updated with the most recent data from CAMO.
2. Click **File** > **Save Plan**.

   A message appears indicating your changes were saved.

What's next

- If new non-routine tasks were loaded into the plan and they have corrective actions associated with them, the corrective action tasks are in the *Unknown* project phase; this is an appropriate time to assign them to the correct project phase.
- Now is a good time to compare the production plan against a snapshot created earlier, and to monitor the project by comparing capacity with demand for upcoming work. Also, it is a good idea to capture a snapshot of the current state of the project, for comparison the next time you load task progress.

Find ad hoc tasks added to work packages

Prerequisite

- You have opened the master production plan and selected the correct work package.

About this task

Ad hoc tasks are tasks that were added to the workscope and that are not based on a task definition, for example, faults raised by technicians during the execution of work package tasks. Because you have refreshed the work package with the most recent task progress data, the production plan might include new ad hoc tasks. You must place the ad hoc tasks between technical milestones. Also, it is advisable to assign the ad hoc tasks to phases and work areas.

Use these steps to display all the ad hoc tasks, and only the ad hoc tasks, in the Table View and the Gantt.

Steps

1. On the toolbar, click **Set/Reset Filter** .
2. On the **Filter Criteria** dialog box, do the following:
   - Click **Clear All Filters**.
   - Click the **Tasks** tab.
   - Under **Class/Subclass**, in the **Only Show** list, select all task classes and subclasses except ***ADHOC (Ad-Hoc Task)***.
   - Click **Hide Selected Task Class/Subclass** >.
   - Click **OK**. Only the ad hoc tasks appear in the Gantt.

What's next

Place the ad hoc tasks between technical milestones and assign them to phases and work areas.

Calculation of task completion percentage

When technicians or technical records personnel enter task progress data in CAMO, and you update a production plan in PP&C, the percentage of each task that is completed appears in

PP&C. The calculation of the percentage complete is based on the scheduled hours for each labor row in the tasks.

Example:

A task requires two different labor skills, therefore has two labor rows. Each labor is scheduled for 10 hours of work:

Labor 1	10 hours
Labor 2	10 hours

A technician with the Labor 1 skill completes the work for the first labor row, and records in CAMO that it took 15 hours to complete, not the 10 hours specified in the task details.

- The calculation of percentage complete ignores the actual number of hours spent, the 15 hours, and only consider the scheduled hours for that labor row, 10 hours.
- On a total number of scheduled of hours of 20 (Labor 1 + Labor 2), the scheduled hours for Labor 1 are completed. Therefore the percentage complete for the task is:

  10 hours (Labor 1) / 20 hours (total scheduled hours for the task) *100 = 50%

Production plan monitoring features

PP&C provides information and features to help you monitor the progress of ongoing maintenance visits. After updating a production plan with task progress, you detect potential problems, compare the project with the plan that was published previously, and compare the non-routine estimates with the real number of non-routine hours spent. The PP&C screen has the following visual indicators:

- In the Gantt, task bars contain shading, the length of which indicates how much of the work is completed. The percentage value of work completed also appears next to the bar.
- The Activity Details View shows details about the selected task, including the task status, and for each skill required by the task, the number of hours that were originally scheduled, the number of hours of work done, and the estimated number of hours remaining.
- In the Gantt, a warning icon appears next to an activity when there is a problem, for example, if the current schedule means the activity will be completed later than the desired date indicated in its Should End Before date. You select the activity in the Gantt to see the details of the warning in the Warnings panel on the right of the screen. The warning icon looks like this:  .
- The Resource Loading Graph indicates when the demand exceeds available resources, and when there are surpluses of resources.

You can create complex filtering criteria or use preset filters to display only the tasks that are of interest to you, for example, to see only the tasks that are on the critical path. Other filtering

options include work areas, phases, date ranges, crews and more. You can also filter both the demand (tasks) and the capacity to only those that apply to specific skills or crews.

If the plan includes preset filters to show the information you need to monitor the plan, for example, show only tasks that are late, show only tasks that are exceeding the number of hours scheduled, and so on, you can apply all these preset filters one after the other to easily and quickly see the information that is of interest to you.

Other features include the ability to compare the project with a baseline snapshot of the production plan captured earlier to detect the most significant differences, and the ability to view a report of non-routine work for the project that includes the original non-routine estimates, the actuals non-routine hours spent, and what estimate remains.

You can label individual tasks that you want to monitor more closely as tasks to watch, by selecting the Watch Task option in the Task Properties dialog box. An eye-shaped icon appears next to the task bar in the Gantt,  and you can filter the display to show only the tasks to be watched.

Compare production plans against baseline snapshots

After you update a production plan with the task progress, you can compare the state of the production plan against a baseline snapshot of how the plan looked at a specific time in the past, for example, the last time the plan was shared with technicians doing the work.

Prerequisite

- At least one baseline snapshot of the production exists.

About this task

This visual representation shows how the plan differs from what it was at the moment the snapshot was captured.

Steps

1. With your production plan open, click **Setup** > **Comparison**.
2. On the **Comparison** dialog box, select a baseline snapshot.
3. Click **Compare**. The activities captured in the baseline snapshot appear in the Gantt as gray shadows of the corresponding entities in the actual plan.

   Differences are apparent, in that corresponding activities (phases, tasks, milestones) are at different dates and time in the Gantt. You can expand the **Table View** by dragging its right edge toward the right, to see the start and end times captured in the baseline snapshot, and the difference between the baseline and the actual start and end times. Tasks that were removed after the baseline snapshot was captured are listed in the **Removed Work** section.

Tip To remove or display the baseline in the Gantt, click **Hide Baseline** or **Show Baseline** on the toolbar.

4. To display only the tasks that were added to the workscope after the baseline snapshot was captured, do the following:
   - With both your production plan and the baseline visible, click **Set/Reset Filter** on the toolbar.
   - On the **Filter Criteria** dialog box, click the **Baseline** tab.
   - Click **Newly Raised Work**, and click **OK**.

For the selected baseline snapshot, the Details pane for a task shows the Scheduled Hours values from the baseline snapshot and from the current production plan. Scheduled hours include both inspection and independent inspection hours. The scheduled hours values are calculated as follows:
The sum of actual hours on complete labor rows plus the sum of scheduled hours on labor rows that are not complete.

Review the estimated non-routine hours remaining in a plan

After loading task progress into the production plan for a maintenance visit that is in progress, the real number of hours spent on non-routine work is loaded in the non-routine report. This report helps you monitor how many hours of non-routine work have taken place, versus what was estimated.

Steps

1. Click **View** > **Non-Routine Report**.
2. In the **Non-Routine Report For** area, define a search criteria to display only the non-routine data for a specific non-routine phase, work area, planning type, or any combination thereof.

   The remaining non-routine estimated hours are shown in the **Remaining NR Est (h)** column. The **Remaining NR Est (h)** values include the non-routine hours estimated for all initiating tasks that have not been started, and the hours for initiating tasks that are in progress.

   The estimated non-routine hours are removed from the values in this column only when the initiating task is completed in CAMO.

   If the original non-routine estimate was captured, its values appear in the non-routine report so that you can compare the current situation with what was predicted.
3. Evaluate whether the remaining non-routine estimated hours are adequate or too high.

What's next

If you think that the work remaining in the visit will not generate as many faults as estimated in the production plan—perhaps because most of the high risk work has been completed, yet the remaining non-routine estimates are large—lowering the non-routine estimates can address bottlenecks in the plan.

Non-Routine report

Initially, the PP&C non-routine report displays the estimated number of hours required to address non-routine work for the maintenance visit, based on the planning types of the tasks. As you make adjustments to planning types and non-routine factors, the non-routine report is updated. You can capture the original non-routine estimate in the report before making adjustments to it; this lets you compare the overall original estimate, based on the original planning types and non-routine factor, with the one that includes your adjustments.

When you are working with a template, the maintenance personnel has not yet started to raise faults; therefore, the non-routine report displays the predicted number of non-routine hours, based on planning types and adjustments.

As a maintenance visit is in progress, faults are raised in CAMO by technicians. When you refresh the production plan associated with the maintenance visit, the real number of hours spent on non-routine work is loaded in the non-routine report. This report helps you to monitor how many hours of non-routine work have taken place, versus what was estimated.

The non-routine report is divided into three areas. Use the Non Routine Report For area to filter the non-routine information that is displayed in the report, for example, filter by non-routine phase, work area, and planning type. Consult the Total Values area to see the non-routine values for the search criteria you select in the top area. The Total Non-Routines area is a graphical representation of the non-routine values.

In the Total Values section, the skills required to address the non-routine work are listed in the first column. For each skill listed, the following information is shown:

- Orig NRE (h): The number of non-routine work hours in the original non-routine estimate of the plan or template.
- Only when you are working with a production plan, the following information appears:
  - Active+Completed Faults (h): The total number of hours spent addressing non-routine tasks completed for the work package, and the number of hours planned to address non-routine work that is not yet completed, but that has been identified.
  - Remaining NR Est (h): The number of non-routine hours still predicted to be needed—those estimated for initiating tasks that have not been started, and those for initiating tasks are started but not yet completed.

    When actual faults are raised against a routine task (the initiating task), the hours recorded by maintenance execution personnel for the faults are added to the Actual Faults (h) value.

When the technician completes the initiating task in CAMO and you update the production plan with the task progress data from CAMO, the hours are removed from the non-routine estimate of the initiating task—which is included in the value shown for Remaining NR Est (h). In other words, while a task is in work in CAMO, hours spent on faults raised against the task are added to the non-routine report in PP&C, and the non-routine estimate for the initiating task remains unchanged. When the task is complete, the estimated non-routine hours for the task are removed; only the actual number of hours appear in the non-routine report.

- Total (h): The new estimate of the total number of hours that will be required of this particular skill to address all non-routine work in this work package. This includes the hours already spent on completed and active faults, and the remaining non-routine estimate.

Delete production plan snapshots

You can delete snapshots of production plans—production plan baselines—when you no longer need them.

Prerequisite

- At least one snapshot of the production plan exists.

Steps

1. In CAMO, select the **PPC Management** menu item.
2. Select the **Delete Baselines** tab.
3. In the table, select the baseline snapshots(s).
4. Click **Delete**.

Addressing bottlenecks and capacity issues

The critical path includes all tasks on the path that ends at the earliest time when the project can be completed, based on the current sequence of tasks and dependencies. You can display the critical path in the Gantt to find where adjustments can have the most significant impact on the completion date of the project. If your plan includes more than one critical path, meaning that there are several sequences of tasks that end at the same time, PP&C displays all of the paths in the Gantt chart.

If the duration of the critical path is too long, you must make some adjustments to complete the project earlier. If the demands of the plan exceed the capacity available during the project, you make adjustments to either increase capacity or lower demand. There might be bottlenecks in the plan, that is, moments within the plan when too many tasks are scheduled to occur simultaneously. The schedule of tasks can be that way because of dependencies to other tasks, milestones or phases, or because of a shortage of resources at other moments in the time scale.

To address bottlenecks, you must detect the shortages of resources, and the surpluses available, and make adjustments to the production plan. To detect shortages and surpluses of resources, you compare the demand of the plan with the capacity available at the maintenance location, by consulting the Resource Loading Graph at the bottom of the PP&C interface. You can filter the demand and capacity that appear in the graph for a specific date range, or skill, as needed.

Depending on the situation, you can complete the appropriate actions from the following list:

- Remove tasks from the critical path by rescheduling them.
- Add capacity to the maintenance location.
- Schedule the work package to a different location that has more capacity available.
- Lower the demand by removing non-critical tasks from the work package.
- Adjust the non-routine estimate included in the plan.

Compare demand and capacity

Perform these steps to assess whether there is sufficient capacity to complete the tasks scheduled during a specific date range, for example the next few shifts you are planning.

Steps

1. On the toolbar, click **Set/Reset Filter** .
2. On the **Filter Criteria** dialog box, under **Date Range**, select the correct **Start Date** and **End Date**.
3. Click **OK**.

   The **Resource Loading Graph** shows both the tasks and resources that apply to the date range you specified.

> **Tip** You can also compare the demand (the tasks) with the crew capacity for specific skills.

Display and hide the critical path

About this task

The critical path appears as dashed red connector lines that begin at the starting milestone of the production plan, connect in succession to all the tasks in the critical path, and end at the ending milestone. If some tasks are filtered from the display, or if some work areas or phases are collapsed in the Table View, you might not see the entire critical path; the critical path appears only for the tasks that are displayed in the Gantt.

Steps

1. To display all the tasks, do one or more of the following:

- If a filtering criteria is currently in use—if the Set/Reset Filter button on the toolbar has the red triangle and exclamation mark icon in it—do the following:
  - On the toolbar, click **Set/Reset Filter**.
  - In the **Filter Criteria** dialog box, click **Clear All Filters**, and click **OK**.

2. To display the critical path, click **Show or Hide Critical Path** on the toolbar.
3. To hide the critical path when it is displayed in the Gantt, click Show or **Hide Critical Path** on the toolbar.

   Trouble? If all tasks in the Gantt disappear when you hide the critical path, there probably is an active filter that only shows the tasks that are on the critical path. To see all tasks, click **Set/Reset Filter** on the toolbar, and click **Clear All Filters in the Filter Criteria** dialog box.

Remove tasks from the critical path

To address bottlenecks in a production plan, you might try to remove tasks from the critical path. To do so, you must find tasks that have constraints that are not necessary, such as a specific start date or dependencies to other tasks, milestones or phases.

Prerequisite

- The production plan is open.

Steps

1. Clear all filters from the production plan to display all the tasks.
2. To display the critical path, click **Show** or **Hide Critical Path** on the toolbar.
3. With the critical path visible, click **Set/Reset Filter** on the toolbar.
4. On the **Filter Criteria** dialog box, click the **Tasks** tab under the **Demand** tab.
5. Select **Only Critical Path**, and click **OK**.
6. Select a task that is on the critical path and that either can be scheduled at an earlier or later start date, or has unnecessary dependencies.
7. Right-click the task and select **Edit**.
8. On the **Task Properties** dialog box do one or more of the following:
   - On the **Details** tab, click the arrow in the **Start Date** list box.

     Tip If the **Start Date** list box is gray, the task's start date might be pinned. Clear the pinned check box.

   - Select a new start date for the task.
   - Select the **Locked** check box to lock the new date.

- Click the **Dependencies** tab. To remove a dependency, select the dependency in the appropriate section, and click the **Remove** button.
- Click **OK**.

Scheduling to a different location

Prerequisite

- The master production plan is open, and the correct work package is displayed in PP&C.

About this task

If many bottlenecks exist in a production plan, or there is not enough capacity available at the maintenance location where the work package is scheduled, you can assign the work package to a different maintenance location in the production plan, to see whether the capacity available at the location solves the issues.

Steps

1. In the **Table View**, select the production plan (the top-level activity).
2. Right-click and select **Edit** .
3. On the **Details** tab, select a location in the **What If Location** list box.

Export production plans for further analysis

Prerequisite

- The master production plan is open.
- The correct work package is displayed in PP&C.

About this task

You can export a production plan as an XML document for analysis or reporting. This XML document can then be opened with an XML editor or with Microsoft Office Excel 2003 or higher. Exporting several production plans as XML documents is also useful for comparing the different plans. The export file is saved locally, not in the Maintenix database. You cannot import the XML file back into PP&C.

Note

The export file includes only the data of the work package that is currently displayed in PP&C; if you have filtered the plan, only the activities that are not filtered out are in the export file.

You can perform several successive export operations, using a different filter in each one, and then combine the different exports into a single Excel report that provides answers to several questions of interest.

Steps

1. Click **File** > **Export Work Package**.
2. On the **Export Plan** dialog box, do one of the following:
   - Enter the file name in the **File** box.
   - Click **Browse** to select a location to save the file.

Delete master production plans and templates

If you have been granted permission to delete production plans and templates, you do so from the Production Planning and Control Management page in CAMO.

About this task

Note

You can delete a template even if it is applied to production plans. However, if a production plan is open in PP&C while its template is deleted, the Last Template field in the Activity Details View still lists the deleted template for the work package. The name of the template will be removed when you close the plan and reopen it.

Steps

1. In CAMO, select the **PPC Management** menu item.
2. Click the **Control** tab.
3. In the table, select the master production plans and/or template(s).

4. Click **Delete Plan/Template**.

Quit the PP&C program

When you are satisfied with the additions or changes made to your template or plan, you can quit Production Planning and Control (PP&C). Before exiting, you are prompted to save and release control over the template or plan.

Steps

1. On the **PP&C Template or Plan** page, click **File** and click **Exit**.

   Tip You can also click the X icon in the right corner of the browser window to exit PP&C.

2. When prompted to save your plan before exiting, click one of the following:
   - Click **Yes** to save your plan before exiting.
   - Click **No** to exit your plan without saving.

   If you click **Yes**, go to step three. If you click **No**, go to step four.
3. Enter the name and description of the template or plan in the **Save Template** or **Save Production Plan** window, and click **OK**.
4. When prompted to release control over your work package before exiting, click one of the following:
   - Click **Yes** to release control of the template or plan.
   - Click **No** to retain control of the template or plan.

UI pages

Production Planning and Control Management page

This page is used to manage production plans and production templates created in the Production Planning and Control (PP&C) application. The page contains two tabs: Baselines and Control.

- Baselines tab

  The Baselines tab lists all the production plan snapshots, called baselines, that were created by PP&C users. You can refresh the contents of the tab to be sure to see all baseline snapshots that exist in the system, and delete baseline snapshots you no longer need.
- Control tab

  The Control tab lists all the PP&C production plans and production planning templates that exist in the system. You can refresh the contents of the tab to include the plans and templates

recently created, and delete obsolete plans and templates. The list shows the user who has control of each plan and template, and the date when the user took control of it. When a plan or template is controlled by a user, that user is the only person who can save changes to it. If you work in a supervisory capacity and have the required permission settings, you can release plans and templates from the control of the user, so that other users can make and save their changes. You do this when a user has forgotten to release their control of a plan or template before leaving, and another user has to make changes to the same plan or template.

7

Materials management

People who manage materials ensure that the right parts and the right tools are issued on time for scheduled maintenance and when needed for unscheduled maintenance.

This includes responding to part requests, managing inventory and warehouses, shipping and receiving inventory, inspections, and coordinating with procurement and finance to ensure that invoices align with parts ordered, and inventory received.

Demand management

Demand is communicated through requests for parts and consumables. Demand management involves reserving inventory to fill the requests, procuring inventory that is not available in stock, and issuing inventory to complete maintenance tasks.

Requests for inventory can be part requests or stock requests. Part requests are created for the parts and other inventory required to complete upcoming maintenance work. Stock requests are created to replenish stock when the stock level is low and might result in a shortage.

Stock requests are created automatically by CAMO to replenish the supply location when stock levels are set and the stock quantity drops below the re-order level. Stock requests can also be created manually.

The basic material demand and response process in CAMO is as follows:

- Demand comes from scheduled and unscheduled maintenance in the form of part requests.
- When a work package that contains tasks with part requirements is committed or started, or if parts are requested for the work package, CAMO has the location and the Needed By date for the part requests and attempts to reserve the required parts. Most inventory is reserved automatically.
- Material controllers manually fulfill part requests that CAMO cannot automatically fulfill.

Part requests

Part requests are created for the parts and other inventory that are required to complete upcoming maintenance work.

Part requests are automatically created by CAMO when the following events occur:

- Actual tasks that contain part requirements are created either manually by a user or automatically by CAMO.
- Additional tasks with part requirements are assigned to a work package that is committed or in work.
- A fault raised during the execution of a work package requires parts.
- A part requirement is added manually to an actual task, and the part requirement states that a part request be created immediately.

Part requests can be created manually as ad hoc part requests.

Some part requirements identify parts that technicians must remove to access other parts and must then reinstall. CAMO does not create part requests for these part requirements.

Part request status

As part requests are created and fulfilled, they can have the following statuses:

Part request status descriptions

Status	Description
OPEN	No inventory is reserved for the part request. Open part requests display the status PROCESSING if auto-reservation is currently running for the part request, but has not yet reserved an inventory item.
AVAIL	Locally available inventory is reserved for the part request.
REMOTE	Remotely available inventory is reserved for the part request.
QUAR	Inventory in quarantine is reserved for the part request.
POREQ	An order was created to procure the part because no inventory is available to fill the part request.
ONORDER	The order that was created to fill the part request was issued.
INSPREQ	Inventory is reserved for the part request, but the inventory item requires inspection.
ISSUED	Requested inventory was issued to maintenance personnel.
CANCEL	The part request was canceled.

When part requests are fulfilled and they have inventory reserved, their status changes to AVAIL or REMOTE. If auto-reservation breaks the reservations and steals their inventory for higher ranked part requests, their status changes back to OPEN.

Part request priority

The part request priority is the first and third criteria when auto-reservation ranks part requests to determine which ones to fulfill first and to steal from. AOG is the highest priority and is considered separately from other priorities as the first and most important ranking criteria. The other priority levels are ranked in order, for example Critical > Expedite > Normal. These other priority levels and their order depend on the values that are set in the REF_REQ_PRIORITY table.

When part requests for faults with an AOG severity are automatically created, the part request is created with an AOG priority. Automatically created part requests for tasks have normal priority. To change a part request's priority, on the Part Request Details page, click the Edit Request Priority button.

Related concepts

Part requirements

Related tasks

Change the priority of a part request

Needed By date

Part requests for tasks and faults have Needed By dates that material controllers try to meet when fulfilling part requests.

The Needed By date for a part request depends on whether the request is for a task that is assigned to a work package and whether the work package is scheduled or started.

Source of Needed By dates for part requests

Status of related task or fault:	Needed By date on part request is the same as:
Task or fault is not assigned to a work package. Task or fault has no deadline.	Needed By date is blank.
Task or fault is not assigned to a work package. Task or fault has a deadline.	Task due date.
Task or fault is added to a work package. Work package is not scheduled.	Task due date.

Status of related task or fault:	Needed By date on part request is the same as:
Task or fault is in a work package. Work package is scheduled.	Work package scheduled start date.
Task or fault is in work package. Work package is started.	Work package actual start date.
Task or fault is in a started work package. Task itself is started.	Task actual start date.
Task or fault is added to work package that's in progress.	Work package scheduled end date.

When the task deadline, or the work package scheduled end date, scheduled start date, or actual start date is updated, the Needed By date on associated part requests is also updated.

Auto-reservation

Auto-reservation is an CAMO process that automatically reserves inventory to fulfill most part requests for maintenance tasks. Auto-reservation reserves inventory based on criteria that ensure the top ranked part requests are filled first and top ranked inventory is reserved first.

Most part requests are fulfilled by auto-reservation but auto-reservation cannot fulfill requests if there is no inventory in stock or if the part requested isn't eligible for auto-reservation — for example, the part has the Controlled Reservation option enabled. As part requests are created they are either processed and fulfilled by auto-reservation or they are manually fulfilled by material controllers.

When auto-reservation processes a part request, all part requests and all available inventory with the same part number or part group and supply location are evaluated.

Auto-reservation reserves from within a supply location — first from preferred materials locations if they are specified for a part request's where needed maintenance location, next from the rest of the supply location (minus ignored locations), and finally from the remote supplier for the supply location if there is one (minus ignored locations).

The part requests are evaluated against a set of criteria to ensure that higher ranked requests for Aircraft on Ground (AOG) maintenance tasks or with earlier Needed By dates are fulfilled before lower ranked requests. This means that reservations can be fulfilled and then broken when higher ranked requests are processed — inventory is unreserved from one part request to fulfill a higher ranked request. The request that loses its inventory reservation changes to open status and auto-reservation processes it again.

Existing reservations are continuously re-evaluated as new requests are created. The re-evaluation process ends for requests with reserved inventory when the reserved inventory is

issued and the status of the part request changes to ISSUED. In most cases reservations are also not broken once the part requests are locked a specified number of hours before the Needed By date.

Inventory is not stolen from part requests that were manually reserved unless the inventory is pre-drawn and auto-reservation is unable to reserve for a high ranking part request from elsewhere in the local supply location.

Related concepts

How part requests are ranked
Inventory ranking criteria

Auto-reservation and locations

When parts are needed for maintenance, auto-reservation searches and reserves inventory from the supply location that the maintenance location belongs to. Materials locations for the supply location are searched in a specific order.

You can set up your supply location to include the following options for auto-reservation:

- Remote supplier.
- Preferred materials locations for maintenance locations.
- Ignored locations that auto-reservation does not reserve from.

A Serviceable Stores (SRVSTORE) materials location can be on the auto-reservation ignore list for the supply location and at the same time be the preferred location for a maintenance location. This dedicates that materials location to the one maintenance location for auto-reservation purposes. For example line stores are off limits for other hangars and shops.

When reserving inventory for part requests, auto-reservation searches by location in the following order:

1. Preferred materials location, if one is specified for the part request's Where Needed maintenance location.
2. Second preferred materials location if one is specified.
3. Supply location minus ignored locations, if ignored locations are specified.
4. Supply location's PREDRAW locations if no inventory is found elsewhere within the supply location.
5. Remote supplier location if one is specified (minus ignored locations) and if remote auto-reservation is not prevented. Only Ready for Issue (RFI) condition inventory is reserved from a remote supplier location.

If auto-reservation cannot reserve inventory in the first location, the next location is evaluated.

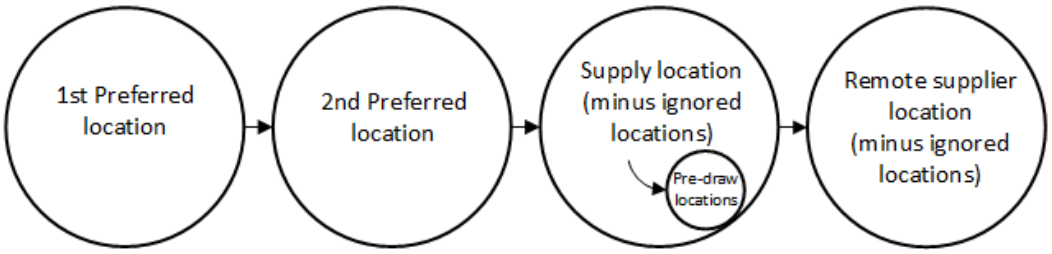

Auto-reservation location search order

Inventory in the Operations (OPS) and In Transit (INTRANS) locations cannot be auto-reserved.

Initially inventory in the PREDRAW location isn't auto-reserved, but if the part request cannot be fulfilled from elsewhere in the supply location, auto-reservation will steal reserved inventory from PREDRAW locations for higher ranking part requests with earlier Needed By dates. Typically part requests are locked when their reserved inventory is pre-drawn, but auto-reservation can unlock part requests for urgently needed parts. Batch inventory is not stolen from the PREDRAW location.

If you transfer inventory within a supply location, auto-reservation is triggered. In most instances, when inventory is reserved for an unlocked part request and is then transferred to or from a preferred or ignored location, auto-reservation breaks the reservation. These inventory items are then reserved (or not) as appropriate for their location and ranking.

What happens to reservations when inventory is transferred

Move inventory reserved for part request from:	To location (not ignored or preferred)	To preferred location	To ignored location
Location (not ignored or preferred)	Reservation kept	Reservation broken	Reservation broken
Preferred	Reservation broken	Reservation broken	Reservation broken
Ignored	Reservation broken	Reservation broken	Reservation kept

When part of a batch is selected and transferred, the transferred part keeps its reservation even if it's transferred to an ignored or preferred location. Reservations for other parts of the batch are kept or broken depending where the transferred batch is moved and according to the table above. For example, if the transferred batch is moved from a location to a preferred location, part request reservations for the untransferred batches are broken.

If inventory is reserved at a remote supplier location and that inventory is transferred anywhere in the remote supplier location, including an ignored or preferred location, the reservation is kept.

Related concepts

Supply location
Remote supplier location

Ignored locations

Within a supply location, you can prevent auto-reservation from reserving inventory from specified sub-locations.

If you add a location to the auto-reservation ignore list, auto-reservation does not reserve inventory from that location to fulfill part requests. You might do this for the following reasons:

- Dock and serviceable staging locations are not optimal places for runners to pick up inventory.
- You store inventory that hasn't cleared customs in a specified area.
- You don't want line supplies (for example) auto-reserved for other non-line maintenance locations.
- You have a long term storage area.
- You separate domestic and international materials. Auto-reservation should not reserve international materials for maintenance done on domestic aircraft and vice versa.

You can add the following maintenance and material location types to the auto-reservation Ignore list:

- Serviceable Store
- Serviceable Staging
- Dock
- Repair
- Line
- Hangar

Sub-locations of ignored locations are not displayed on the ignore list, but auto-reservation ignores all sub-locations of ignored locations. Although auto-reservation cannot reserve inventory from the locations on the ignore list, material controllers can manually reserve inventory from listed locations.

A Serviceable Stores (SRVSTORE) materials location can be on the auto-reservation ignore list for the supply location and at the same time be the preferred location for a maintenance location. This dedicates that materials location to the one maintenance location for auto-reservation purposes.

Related concepts

Location types
Supply location

Related tasks

Specify ignored materials locations

Specify ignored materials locations

To prevent auto-reservation from reserving inventory from one or more locations within a supply location, add locations to the auto-reservation ignored materials locations list.

About this task

The Auto-reservation tab is only available on the Location Details pages of supply locations.

When a location is ignored, its sub-locations are also ignored. Sub-locations are not displayed on the ignore list.

If you later remove a location from the list, auto-reservation can reserve from that location.

Steps

1. On a supply location's **Location Details** page, **Auto-reservation** tab, **Ignored Materials Locations** list, click ⊞.
2. On the **Add Ignore Locations** page, select the check boxes of the locations you want auto-reservation to ignore.

   Note

   You can add the following maintenance and material location types to the auto-reservation ignore list:
   - Serviceable Store
   - Serviceable Staging
   - Dock
   - Repair
   - Line
   - Hangar

3. Click **OK**.

Note To remove a location from the **Ignored Materials Locations** list, select the check boxes for one or more locations, click ⊟, and click **OK**.

Related concepts

Supply location

Ignored locations

Preferred materials locations

For maintenance locations, you can specify preferred materials locations that auto-reservation evaluates first when reserving inventory for part requests.

For a maintenance location within a supply location, you can specify first and second preferred materials locations that auto-reservation searches first and second before looking elsewhere in the supply location.

If hangars and stores are physically located far apart, you might set a preference for a materials location that's closest to a maintenance location. For a maintenance location that specializes in one type of work, you might prefer a materials location that stocks specialized inventory for that type of work.

You can designate serviceable store (SRVSTORE) type locations as preferred materials locations for the following maintenance type locations:

- LINE
- TRK (track)
- SHOP

If you designate a SRVSTORE location as preferred, the children of that location are also preferred.

If part requests are created for maintenance locations with preferred locations, then available inventory in those preferred locations is reserved even if the preferred location is also on the auto-reservation ignore list.

If preferred locations are specified but inventory is not available in the preferred locations, auto-reservation searches the rest of the supply location (minus ignored locations), then searches the remote supplier location if one is specified (minus ignored locations).

Considerations when setting up preferred locations

Preferred locations do not impact how auto-reservation ranks part requests but preferred locations do impact how ranked inventory is reserved. This is because auto-reservation searches, ranks, and reserves inventory in preferred locations first. If inventory is available in preferred locations it is reserved even if there is higher ranked inventory in non-preferred locations. The result is that inventory with later shelf-life expiry dates can be reserved before inventory that's expiring sooner or inventory first in is not necessarily first out.

Likewise when preferred locations are set up, there could be an increase in stealing from reserved batches, reservation of partial batches, and splitting of part requests. This depends on how preferred locations are stocked, so when implementing preferred locations, set preferred materials locations for one maintenance location and test before proceeding with additional locations.

Related concepts

Location types
Supply location

Related tasks

Specify preferred materials locations

Specify preferred materials locations

For a maintenance location within a supply location, you can specify preferred materials locations that auto-reservation searches first before looking elsewhere in the supply location.

About this task

The same location can be on both the auto-reservation preferred materials locations and ignored materials location lists.

To change the preferences for a maintenance location that already has preferred materials locations specified, select the maintenance location and delete it, then add it again and select your new preferences.

The Auto-reservation tab is only available on the Location Details pages of supply locations.

Steps

1. On a supply location's **Location Details** page, **Auto-reservation** tab, **Preferred Materials Locations** list, click ⊞.
2. On the **Add Preferred Locations** page, select one or more maintenance locations.
3. From the **First Preference** list, select a materials location.
4. (Optional) From the **Second Preference** list, select a materials location.
5. Click **OK**.

Related concepts

Preferred materials locations
Supply location

Remove preferred materials locations

If you no longer want a maintenance location within a supply location to have preferred materials locations for auto-reservation or you want to change the preferences, remove the maintenance location from the Preferred Materials Locations list.

About this task

To change the preferences for a maintenance location that already has preferred materials locations specified, select the maintenance location, remove it, then add it again and select your new preferences.

Steps

On the **Location Details** page, **Auto-reservation** tab, **Preferred Materials Locations** list, select one or more maintenance locations and click .

How part requests are ranked

When auto-reservation retrieves all the part requests for the same part number or part group and supply location, it ranks them to determine which ones to fulfill first and which ones to steal from.

Auto-reservation ranks part requests based on the following criteria:

1. Request Priority is AOG (Aircraft on Ground): AOG priority part requests are ranked highest.
2. Request's Needed By date: earlier dates are ranked higher.
3. Request Priority is higher: AOG priority is separate criteria, but the other priority levels are ranked in order. For example Critical > Expedite > Normal. The levels and their order depend on the values that are set in the REF_REQ_PRIORITY table.
4. Requests from local maintenance locations outrank requests from remote locations.
5. Part request creation date: requests created earlier are ranked higher.

If there are two AOG part requests: the one with the earlier Needed By date is ranked higher. If the Needed By dates are the same, then a local one is ranked higher than a request from a remote location. If both are for local maintenance locations then the part request that was created first is ranked higher.

If there are two non-AOG priority requests (for example, one Critical and one Normal), the Needed By date - not the priority, determines the part request's ranking. If the Needed By dates are exactly the same, then the (non-AOG) priority level is evaluated and used to rank the requests.

In the example below, there are five part requests for the same part number. The part request priority order is AOG > Critical > Expedite > Normal.

Example: Part requests fulfilled order

Part requests ranked and fulfilled in order	Request priority	Needed By date	Where Needed
First	AOG	June 2, 2018	Local
Second	AOG	June 2, 2018	Remote
Third	Normal	June 2, 2018	Local
Fourth	Normal	June 2, 2018	Remote
Fifth	Expedite	June 3, 2018	Local

Related concepts

Auto-reservation
How stealing works
Auto-reservation and locations

How stealing works

Auto-reservation is designed to ensure that the most important part requests get parts. Therefore, stealing inventory from one part request to fulfill a higher ranking request is part of the process.

Auto-reservation cannot steal from manually reserved or from locked part requests and never steals from higher ranking part requests. When inventory is stolen, the process works differently for batch and serialized part requests.

When a new part request for serialized parts is evaluated, auto-reservation reserves the highest ranked inventory from a list that contains both unreserved inventory and inventory that was reserved for lower ranking part requests.

Stealing for batch requests is minimized: Batch inventory reserved for AOG priority part requests is never stolen. Stealing is only considered for non-AOG requests if there is no unreserved inventory available and then auto-reservation steals first from the lowest ranked part request that has a reservation and works up the lower ranked part request list until the new higher request is fulfilled.

Another variation is that, as a last resort for serialized part requests, auto-reservation will steal from reserved predrawn inventory for AOG or higher ranked requests that have earlier Needed By dates.

If a part request is highly ranked, it stands to reason that it is fulfilled sooner with the highest ranked inventory that's available at the time and that its reservation isn't broken. It is therefore possible that a higher ranked request retains a reservation of lower ranked inventory even if

a higher ranked inventory becomes available. Material controllers always have the option to manually steal a higher ranked inventory if necessary.

Related concepts

How part requests are ranked

Locked reservations

When a part request reservation is locked, material controllers can manually steal the reserved inventory, but auto-reservation cannot steal the reserved inventory for higher ranked part requests.

Reservations for part requests lock in the following cases:

- When inventory is manually reserved to fulfill a part request.
- If a purchase order was created from a part request, the inventory that's being purchased is reserved for the part request and the request is locked when the inventory is received.
- If the Needed By date is within the time period specified for the PRINT_TICKET_INTERVAL configuration parameter. The default value is 24 hours before the Needed By date. If RFI-condition inventory is in the warehouse, it is automatically moved to Pre-draw. If inventory is manually transferred to pre-draw, this also locks the reservation.
  - Within the PRINT_TICKET_INTERVAL window, if RFI-condition reserved inventory is received from the remote supplier on a shipment, the reservation is locked when the inventory is received.
  - If RFI inventory is received for an ad hoc order that's not linked to a part request and auto-reservation reserves that inventory for a part request that's within the PRINT_TICKET_INTERVAL window, the request locks. Auto-reservation can reserve received INSPREQ inventory, but this reservation is not locked and does not lock even after the inventory is inspected as serviceable.

If the Needed By date for a work package is within the print issue ticket time period, its part request reservations are locked. If the work package is then rescheduled to a later date, the part request reservations remain locked. Locked reservations are excluded from consideration by auto-reservation except in the unusual circumstance that auto-reservation could not reserve inventory from the supply location to fulfill a part request that is higher ranked and has an earlier Needed By date than inventory in Pre-draw. In this case, although the reservation was locked, it can be unlocked.

When inventory that's reserved for a locked reservation is transferred, the reservations aren't broken even if inventory is transferred to or from a preferred or ignored location or to quarantine.

To know if a reservation is locked, view the Part Request Details page, Resulting Action area, Locked Reservation check box. This check box is ready-only.

Note that if batch parts were ordered to fulfill a part request, but only part of the ordered quantity is received, then the part request for the received inventory is locked, but the split request for the remaining inventory is not locked when that inventory is later received.

Inventory ranking criteria

To determine which inventory to reserve first, auto-reservation evaluates available items and ranks them based on ordered criteria.

The same criteria are used to rank serialized and batch inventory, with the exception of the Quantity criteria which only applies to batch inventory.

1. Inventory ownership: inventory owned by the organization or operator is ranked higher than vendor-owned inventory.
2. Inventory condition: Inventory in Ready For Issue (RFI) condition is ranked higher than inventory in Inspection Required (INSPREQ) condition.
3. Shelf-life expiry dates: Inventory with earlier shelf-life expiry dates is ranked higher than with inventory with later expiry dates or no expiry date.
4. Received date: Inventory that was received earlier is ranked higher than inventory that was received later.
5. Quantity: Smallest batch that can completely fulfill the request is ranked higher than bigger batches. Applies only to ranking of unreserved batches of inventory that are big enough to fulfill a request.
6. Created in CAMO: Inventory that was created earlier is ranked higher than inventory that was created later.

Related concepts

How serialized inventory is reserved
How batch inventory is reserved
Auto-reservation
What inventory can be auto-reserved?

How serialized inventory is reserved

Before reserving serial, tracked, assembly, or kit class inventory to fulfill a part request auto-reservation ranks all the inventory in the supply location that could fulfill the request and reserves the most suitable item.

When reserving serialized inventory, auto-reservation does the following:

1. Searches the first location for unreserved inventory plus inventory that was reserved for lower ranked part requests.

2. If inventory is found, ranks inventory using the inventory ranking criteria and reserves the highest ranking inventory for the request.
3. If no inventory can be reserved in the first location, searches the next location and repeats the ranking of inventory.

The location search order is first preferred location > second preferred location > rest of the supply location minus ignored locations > remote supplier location if one is specified (minus ignored locations).

When auto-reservation ranks the available inventory for a new part request, inventory that's reserved for higher ranked part requests is not considered. This means that a higher ranked request can retain a reservation of lower ranked inventory even if a higher ranked inventory becomes available.

The following table provides an example of the order in which five inventory items with the same part number are ranked and reserved if no preferred locations are specified.

Inventory reserved order - no preferred locations specified

Ranked order	Location	Ownership	Condition	Shelf-life expiry	Received date	Created date
Inv B	Supply	Operator	RFI	2018 May 10	2017 May 10	2017 May 10
Inv A	Supply	Operator	RFI	2019 Jan 05	2018 Jan 05	2018 Jan 05
Inv D	Supply	Operator	INSPREQ	2018 Apr 7	2017 Apr 7	2017 Apr 7
Inv C	Supply	Vendor	RFI	2018 May 10	2017 Jan 10	2017 Jan 10
Inv E	Remote supplier	Operator	RFI	2018 Mar 7	2017 Mar 7	2017 Mar 7

In the example below, you can see how preferred locations change the order in which the same five inventory items are reserved. Inventory A outranks inventory D, but a lower ranked inventory in a preferred location is reserved before a higher ranked inventory elsewhere.

Inventory reserved order when preferred locations are specified

Ranked order	Location	Ownership	Condition	Shelf-life expiry	Received date	Created date
Inv B	1st Preferred	Operator	RFI	2018 May 10	2017 May 10	2017 May 10

Ranked order	Location	Ownership	Condition	Shelf-life expiry	Received date	Created date
Inv D	1st Preferred	Operator	INSPREQ	2018 Apr 7	2017 Apr 7	2017 Apr 7
Inv A	2nd Preferred	Operator	RFI	2019 Jan 05	2018 Jan 05	2018 Jan 05
Inv C	Supply	Vendor	RFI	2018 May 10	2017 Jan 10	2017 Jan 10
Inv E	Remote supplier	Operator	RFI	2018 Mar 7	2017 Mar 7	2017 Mar 7

Related concepts

Inventory ranking criteria

How batch inventory is reserved

When reserving batch inventory, in addition to the inventory ranking criteria, auto-reservation must consider quantity. The quantity rules and preference for unreserved over reserved batch inventory means that the earliest expiring and earliest received inventory cannot always be reserved first.

When reserving batch inventory, auto-reservation does the following:

1. Searches for unreserved inventory in first location.
2. Evaluates the quantity of unreserved inventory: are there big enough batches or partial batches?
   a. Auto-reservation tries to reserve a batch that's big enough to fulfill the request. If there are batches that are big enough to fulfill the request, auto-reservation ranks these batches and reserves the highest ranking inventory.
   b. If no single batch can completely fulfill the part request, then auto-reservation reserves the biggest partial batch available and creates a new request for the remaining unfulfilled quantity. If two partial batches are equally biggest, auto-reservation ranks these and reserves the highest ranking inventory. Auto-reservation continues processing the split request until the quantity is reserved or the auto-reservation process concludes unsuccessfully.
3. If there is no unreserved inventory, auto-reservation evaluates the reserved inventory and steals from the lowest ranked part request that has reserved inventory. If the quantity from the lowest ranked request is insufficient to fulfill the higher ranked request, then reserved inventory is stolen from the next lowest ranked request, then next lowest ranked request and so on until the request is fulfilled or there is no more inventory available in this location. If the request is only partially fulfilled, the request is split and CAMO creates a new request for the remaining

unfulfilled quantity. Auto-reservation continues processing the split request until the quantity is reserved or the process concludes unsuccessfully. The requests that lost their inventory reservations change to open status and are processed again.

> **Note** Auto-reservation does not break reservations of batch inventory for Aircraft on Ground (AOG) priority part requests.

4. If no unreserved or reserved inventory can be reserved in the first location, auto-reservation searches the next location in the following order: first preferred location > second preferred location > rest of the supply location (minus ignored locations) > remote supplier location if one is specified (minus ignored locations).

Related concepts

Inventory ranking criteria

What actions trigger auto-reservation?

A number of events in CAMO add part requests or available inventory that auto-reservation processes.

The following changes or events trigger auto-reservation:

- Part requests are created, canceled, or updated. Part request updates can include changes to priority, needed by date, or status - a part request with AVAIL status changes to OPEN if inventory that was reserved is stolen.
- Changes in inventory that's available for auto-reservation: for example, a shipment is received and new inventory is created. For another example, if the RFI condition of a reserved item changes to REPREQ auto-reservation breaks the reservation since the inventory is no longer eligible for auto-reservation.
- Changes in work packages: a work package is committed or uncommitted, started or unstarted, or rescheduled. A part request that's eligible for auto-reservation can be in OPEN status without triggering auto-reservation. When you schedule a work package that has tasks with part requirements CAMO automatically creates part requests but does not trigger auto-reservation. Auto-reservation is triggered when you click the Request Part, Commit Scope, or Start Work Package buttons.
- Changes in tasks: for example, the Needed By date is changed, or if you add a task or fault with part requirements to a work package that is already committed or in work, the part requests are automatically created and auto-reservation processes them.
- Changes in inventory locations: When inventory is transferred within a supply location, auto-reservation is triggered. In most instances, if the inventory is transferred to or from a preferred or ignored location and was reserved for an unlocked part request, auto-reservation breaks the reservation. There are some exceptions such as when inventory is transferred from one

ignored location to another - reservations are not broken unless one of the ignored locations is also a preferred location. If you transfer part of a reserved batch, the reservation for that batch is kept, but reservations for other parts of the same batch break depending where they're transferred from and where they're transferred to. Auto-reservation is triggered if inventory is moved to another supply location.

- Changes in auto-reservation locations: the remote supplier location is changed or auto-reservation is prevented from the supplier location.

Related concepts

Auto-reservation

What inventory can be auto-reserved?

When fulfilling part requests auto-reservation ensures that inventory is generally eligible for auto-reservation and that potentially reservable track or assembly class inventory is valid for specific part requests.

Inventory that's eligible for auto-reservation

Auto-reservation only evaluates inventory in the same supply location as the Where Needed location for the part request - or in the supply location's remote supplier location. Before inventory can be auto-reserved, it must meet the following requirements:

- Part status is ACTV (Approved Part).
- Part number is not marked as Controlled Reservation or Prevent auto-reservation.
- Inventory condition is RFI (Ready for Issue) or INSPREQ (Inspection Required). (Ready for Build condition cannot be auto-reserved).
- Shelf-life: The inventory will not expire by the Requested By date.
- Inventory wasn't manually reserved. When auto-reservation evaluates inventory reservations it doesn't re-evaluate or break manual reservations — except in rare cases where auto-reservation steals pre-drawn inventory.
- Inventory isn't issued.
- Location is valid in terms of main auto-reservation location logic and additionally isn't located in the Operations (OPS) or INTRANS locations — it isn't assigned to an aircraft in flight, being shipped, or a shipment isn't pending.
- Kit inventory: Only complete kits that are ready for issue (RFI) can be auto-reserved. Inventory that's inside a kit is not auto-reservable.

Track or assembly class inventory that's valid for specific part requests

When fulfilling part requests for track or assembly class inventory, auto-reservation also checks that the inventory meets specific requirements related to the where it's being installed:

- The inventory's part number is applicable to the aircraft or assembly it will be installed on.
- The inventory's part number is compatible with other parts on the aircraft or assembly that it will be installed on.
- The inventory is interchangeable with the removed part. Its part number is the same or its part number is a valid alternate.
- The inventory's part number does not conflict with task incompatibility rules for the assembly it will be installed on.

Related concepts

Inventory ranking criteria

Part requests not fulfilled by auto-reservation

Some part requests are not eligible for auto-reservation and some part requests that are eligible are not successfully processed by auto-reservation.

The following part requests are not eligible for processing by auto-reservation:

- The request is for a part number that has the Prevent Auto-Reservation check box selected. Very expensive parts may have this check box selected.
- The request is for a part number that has the Controlled Reservation check box selected. Auto-reservation cannot fulfill requests for parts with controlled reservations. The request is for a specific serial or batch number and only the specified inventory can be reserved and issued to fulfill requests. Aircraft doors are an example of inventory that can have a controlled reservation.
- The request is for a task, such as addressing a deferred fault, that is not in a work package. Auto-reservation doesn't know where to reserve inventory that might be available to fulfill the request.
- The request is in a work package but the work package is not scheduled and the scope is not committed. Auto-reservation doesn't know where or when the inventory is needed.

Auto-reservation attempts to fulfill part requests but is unsuccessful for the following reasons:

- Valid inventory is not available in local or remote supplier locations.
- The request was created for a specific part number, and inventory matching that part number is not available. If a request is created for a part group any part in the part group can be auto-reserved.

Auto-reservation attempts to fulfill requests the number of times specified by the AUTO_RSRV_MAX_TRY_COUNT configuration parameter. If auto-reservation is unsuccessful, the request remains OPEN and is displayed on the Open Part Requests tab.

Related concepts

Part requests

Manual part request fulfillment

When CAMO cannot automatically reserve inventory for part requests, the requests are displayed on the material controller's To Do List, Open Part Requests and Deferred Fault Part Requests tabs.

Depending on the needed by date for the part request and your permissions, you can use different strategies for filling part requests. Material controllers reserve local inventory, reserve remote inventory, create purchase requests, reserve on order inventory, and depending on permissions, you might create different types of orders directly.

When inventory isn't available locally or in the supply location designated as your supplier for auto-reservation purposes, you might be able to reserve remotely available inventory. To see inventory in a remote location, you have to belong to that location's organization.

In the case of deferred faults, which can be highly time sensitive, you can update the delivery status of these part requests so planners have up-to-date information and can schedule work based on forecasted ETA dates.

Monitor and update part requests on your To Do List tabs

On the Open Part Requests tab, you see ad hoc requests and requests for work packages that are scheduled to your location (and authority). The list is sorted by request priority and then by Needed By date and collects information about the request, related maintenance tasks, and inventory availability. You can assign and unassign requests to yourself, and filter your view to show requests that you work with. This tab does not show deferred fault part requests - these are on a separate Deferred Fault Part Requests tab.

The **Available** column group shows you the number of items that are unreserved out of the total number available locally, remotely, in unserviceable condition (INREP, INSREQ, or REPREQ), or on order. Another sub-column shows inventory that is available locally or remotely through vendor exchange contracts. For additional information on inventory location and condition, you can view the Availability tabs on the Part Details, Part Group Details, and Stock Details pages.

On the Deferred Fault Part Requests tab, you see all deferred fault part requests, including those not scheduled to a location. You can assign and unassign requests to yourself and filter your view to show requests that you work with. On this tab, you can also manually update the ETA date or add a delivery status note. ETA dates are highlighted if they are later than Needed By dates for part requests.

Related tasks

View inventory availability details

Update the delivery status of deferred fault part requests

View inventory availability details

To help you weigh the fastest option for fulfilling part requests, you can check the Availability tabs for part, part group, and stock to see details about inventory condition and the location of remote or on order inventory.

About this task

On the Open Part Requests tab, you see the quantity of serviceable and unserviceable inventory. The Local, Remote, US (unserviceable), and On Order columns show the quantity of unreserved inventory and the total quantity available locally, remotely, loose unserviceable, or on order for the part number. To see the location of remotely available inventory, you can click Reserve Remote Inventory.

But if you want to know about inventory that's in repair or awaiting inspection, look at the part, part group, or stock Availability tab. Typically you reserve RFI inventory, but if it could take longer for a remotely reserved item to arrive than it could take to complete repairs on an item that's in repair locally, then you might check with maintenance about when an INREP item will be fixed.

The Open Part Requests tab shows you available local and remote inventory, but if the Ready for Build (RFB) feature is enabled, this count includes items that are in RFB condition. Depending on the RFB item, it may require shop work before it's ready for installation. To see RFB items counted in a separate column, check the part, part group, or stock Availability tab.

The following steps use the to-do list Open Part Requests tab as the starting point, but you can also access the Availability tabs by doing a part search, part group search, or stock search.

Steps

1. On the **Open Part Requests** tab, do one of the following:
   - In the **Requested** column, click the link. The **Part Group Details** page opens.
   - In the **Request ID** column, click the link, then in the **Part Request** area, click the **Requested Part** link. The **Part Details** page opens.
2. On the details page, **Availability** tab, view information about the location and condition of available inventory.

> **Note** Serial inventory is not as tightly controlled as tracked inventory. For serial inventory, the quantities might not be 100% accurate.

Related concepts

Manual part request fulfillment

Manual reservations

Part requests that are not fulfilled by auto-reservation, are manually fulfilled.

In addition to filling the requests that CAMO does not or cannot fill, you might manually reserve inventory for the following reasons:

- Auto-reservation reserved inventory for the part request, but you identified a more suitable part.
- There is no inventory available in stock to fill the part request, but inventory has been reserved for a lower priority part request. If you have the permissions, you can reassign the reserved inventory to fill the higher priority part request. This is called stealing inventory. When you do this, CAMO changes the status of the lower priority part request to Open, and sends an alert to the owner of the lower priority part request.
- Parts that are ordered but not received are considered part of stock, and you can reserve them to fulfill a part request.
- Assembly or tracked class inventory is in Ready for Build (RFB) condition and requires additional dressing or work in a shop. Inventory in RFB condition cannot be auto-reserved, but you can manually reserve RFB inventory.

Reserve local inventory

If auto-reservation does not reserve inventory for a pending part request, you manually reserve inventory. Local inventory is typically your first choice.

Steps

1. On your to-do list, **Open Part Requests** tab, select a part and click **Reserve Local Inventory**.
2. On the **Reserve Local Inventory** page, review the details, select the inventory and click **OK**.

   If you see that local inventory is available on the **Open Part Requests** tab, but then you don't see the inventory or the same quantity on the **Reserve Local Inventory** page, then the inventory might be in RFB (Ready for Build) condition. This can happen if the RFB feature is enabled. You can reserve items in RFB condition. To see this inventory, select the **Show Ready For Build inventory only** check box.

Related concepts

RFB inventory condition

Reserve remote inventory

If auto-reservation does not reserve inventory and there is no local inventory available to fulfill a part request, you might reserve inventory that's available at a remote supply location.

Steps

1. On your to-do list, **Open Part Requests** tab, select a part request and click **Reserve Remote Inventory**.
2. On the **Reserve Remote Inventory** page, the checkbox **View Part Evaluation** is unchecked by default. If you leave it unchecked, when a "Reserve Remote Inventory" part is selected for part requests having part numbers with high unique inventory records, retrieving the result takes only a few seconds. However, if you select the **View Part Evaluation** checkbox, retrieving the result takes a long time.
3. Review the details on the **Reserve Remote Inventory** page, paying particular attention to the following columns:
   - **Location**: Indicates remote airports that currently have the requested part number in stock.
   - **OEM Part No**: Indicates the part number available at the remote airport. Part requests are typically for part groups, so alternate OEM Part numbers might be available at the remote supplier location.
   - **Available Quantity**: Indicates the unreserved RFI quantity out of the total reserved and unreserved RFI quantity available at the remote airport. If Ready for Build is enabled, also shows the quantity of ASSY or TRK items in RFB condition as a sub-set of the total available quantity.
   - **Shipping Time**: Indicates the normal shipping time from the remote airport.
   - **Part Eval**: (This field appears when the **View Part Evaluation** checkbox is selected.) Indicates if the system considers the item to be a valid part for the request. If the item is not valid, a red icon is displayed. Click the icon to find out why the item is not a valid alternate.
4. On the **Reserve Remote Inventory** page, select the inventory and click **OK**.

CAMO creates a shipment from the remote location to the requested location.

Reserve on-order inventory

If auto-reservation does not reserve inventory and there is no local inventory available to fulfill a part request, you might reserve inventory that was ordered, but that hasn't yet arrived.

Steps

1. On your to-do list, **Open Part Requests** tab, select a part request and click **Reserve On Order Inventory**.
2. On the **Reserve On Order Inventory** page, review the details, paying particular attention to the following columns:
   - **Available Quantity**: Indicates if any of the items are already reserved for another part request.
   - **Existing Reservation**: Indicates details of existing reservations against the item.
3. On the **Reserve On Order Inventory** page, select the part, and click **OK**.

Reserve kit inventory

You can create kit inventory and reserve it for a part request.

Steps

1. On your to-do list, **Open Part Requests** tab, select a part request for a kit and click **Create Kit Inventory for Request**.
2. On the **Create Inventory** page, enter the details for the new inventory and click **OK**. An incomplete (empty) kit serial number is created and automatically reserved for the part request. The kit must still be assembled.

Related tasks

Assemble kits

Update the delivery status of deferred fault part requests

Material controllers cannot update a part request's Estimated Arrival Date, but can add a note, manually update the ETA, or clear the Updated ETA. Updates are displayed on various pages so planners see the latest information.

About this task

The delivery status for a deferred fault part request can include a note, an Updated ETA date, and an Estimated Arrival Date. The Estimated Arrival Date is based on orders and shipments and is automatically shown on various pages if it exists. If there is an Updated ETA, this date is shown (and highlighted when the ETA is later than the Needed By date) instead of the Estimated Arrival Date on pages where only one ETA value is displayed.

You can update multiple part requests at the same time with the same information. If an ETA date is specified, but you now don't know what the ETA date is, you can clear the ETA date.

You can filter your deferred fault part requests and customize your view by hiding columns.

Steps

1. On your **To Do List**, **Deferred Fault Part Requests** tab, select one or more part requests.
2. Click **Update Delivery Status**.
3. In the **Update Delivery Status** window, enter a new **ETA** date and, or enter a note.

   To clear the current **ETA** date, click the eraser icon.
4. Click **OK**.

   The updated delivery status is displayed on the following tabs or pages:
   - **Deferred Fault Part Request** tab, **Delivery Status** column.
   - **Part Request Details** page, **Delivery Status** area.
   - **Work Package Details**, **Parts** tab, **Part Request ETA** column.
   - **Part Request** page, **History** tab (as a record).

- **My Part Requests** tab, **ETA** column.
- Pages that display an **ETA** in the **Material Availability** column.
- Task or Fault Details page, **Task Execution** tab, **Part Requirements** area, **Part Request ETA** column.

Related concepts

Manual part request fulfillment

Related tasks

Filter deferred fault part requests

Filter deferred fault part requests

You can customize your view of the Deferred Fault Part Request tab in two ways: you can filter the list and you can hide columns on the page to show only the requests and the columns that you work with.

About this task

You can filter to show the following:

- A specific aircraft group.
- All part requests. By default you see unassigned and assigned to me requests. If you select the filter, you also see requests assigned to others.
- A specific part request status.
- Requests for parts that are needed with a range of days that you specify. Days are based on the days remaining before the Needed By date specified on the part request.

When you specify the range of days, today is day 0 from 00:00 to 23:59. Tomorrow is day 1. For example:

To see:	Enter one or two numbers
Requests for parts that are Needed By end of day (23:59) today and only today.	0 to 0
Requests for parts that are Needed By today and in the future, including all open requests that don't have a Needed By date.	0 to _
Requests for parts that are Needed By tomorrow and in the next ten days.	1 to 10
Requests for parts that are Needed By end of day today and including previous days.	_ to 0

Steps

1. On the **Deferred Fault Part Request** tab, click **Options**.
2. In the **Options** window, select the filters that you want.
3. Click **OK**.

Create purchase requests

When part requests for maintenance tasks cannot be fulfilled with inventory from stock, you can create and submit purchase requests to your purchasing department. Submitted purchase requests are displayed on the To Do List, Purchase Request tab.

About this task

You can have a part request for a maintenance task or to address a stock low, but only part requests that are created to facilitate maintenance tasks or as ad hoc part requests can be submitted to the purchasing department as purchase requests.

Part requests that are created to address stock lows are submitted to the purchasing department as stock requests.

Steps

1. On the **Open Part Requests** tab, or the **Deferred Fault Part Requests** tab, or the **Part Request Details** page, select a part request and click **Create Purchase Request**.
2. Enter the purchase request information and click **OK**.

Steal part reservations

If inventory is not available in stock to fulfill a part request, but inventory is reserved for a lower priority part request, you can reassign the reserved inventory to the higher priority part request. This is called stealing part reservations.

About this task

When you steal a part reservation CAMO changes the status of the lower priority part request to Open, and sends an alert to the owner of that part request.

Steps

1. On your to-do list, **Open Part Requests** tab, select a part and click **Reserve Local Inventory**.
2. On the **Reserve Local Inventory** page, review the details, paying particular attention to the following columns:
   - **Part Eval**: Indicates if the system considers this item to be a valid part for the request. If the item is not valid, a red icon displays. Click the icon to find out why the item is not a valid alternate.
   - **Available Quantity**: Indicates if the item is reserved for another part request.

- **Existing Reservation**: Indicates existing reservations against the item.

3. On the **Reserve Local Inventory** page, select the item and click **OK**.

Inventory issue

In the physical world, inventory is issued when it's handed out of the storeroom to be used in a maintenance task. In CAMO, the change from unissued to issued is important for tracking stock quantities, triggering financial transactions, creating expected turn-ins for repairable inventory, and for other aspects of material control.

Inventory issue looks different depending on the inventory class and the financial class of the part number. The following table assumes that the tracked item is rotable financial class:

Class	Part request status after issue	Quantity decrease	Issue transaction	Issued check box selected
Batch	ISSUED	Yes	Yes	No
Serial	ISSUED	Yes	Yes	Yes
Tracked	ISSUED	Yes	No	Yes

After batch inventory is issued, the bin quantity is reduced for the batch it was taken from and you can see from the part request, that batch inventory was issued. But there's no separate record for the issued or installed items that shows the Issued check box selected. Batch and serial items are consumable so the financial issue transaction is recorded, but rotables even when installed are still considered financially part of the stock. If a tracked item is consumable financial class instead of rotable financial class, then the issue transaction is triggered.

Smaller or larger operations can have different storeroom staffing levels or processes. You can configure inventory issue to meet your requirements with greater or lesser control over whether unissued inventory can be installed. Depending how you operate, inventory is issued in CAMO in the following ways:

- Inventory issue is recorded in real time when a supply clerk passes inventory to technician and issues inventory in CAMO. When the inventory is installed and the work is recorded, validation checks for unissued inventory might be set to block installations.
- Inventory is auto-issued by CAMO when the storeroom has not issued the inventory, but the task to install the part is completed:
  - A technician installed the item records the work capture. This scenario could occur when a part is required to address an AOG fault raised on a late night inspection and it's after hours for the warehouse.
  - In an IN WORK work package, a user clicks Complete Task, Batch Complete Tasks, or Batch Complete All Tasks.

When the installation task is completed, validation checks for unissued inventory might be set to warn or to provide information.

- Inventory is issued in CAMO by a store room clerk after it is installed by a technician. This is called after-the-fact issue and an alternative configuration to having CAMO auto-issue inventory when the storeroom is not available to issue inventory required for maintenance tasks. When the inventory is installed and the work is recorded, validation checks for unissued inventory might be set to warn or to provide information.
- Inventory is issued in CAMO when technical records clerks record historical maintenance. In this scenario, clerks enter the information from job cards into CAMO. When maintenance work is recorded, validation checks for unissued inventory are set to provide information.

CAMO validation checks and messages for unissued inventory must be configured to block, warn, or provide information to technicians who are installing inventory and recording the work. For information, see the *CAMO Administration Guide*.

When inventory is issued by a storeroom clerk, in addition to the part request, quantity, and financial transactions changes, an issue transfer is created from the current location to where needed location, and for repairable parts, an expected turn-in is created.

If there's no part requirement for an item that you issued for a task, CAMO creates and adds the part requirement to the task. From a part request with reserved inventory for a task in a work package, if you issue inventory but specify a different item that isn't in the system, CAMO automatically creates a record for item, issues it, and sends an alert to designated users and roles.

The Issue to-do list tab displays a list of reserved inventory items that are waiting to be issued. To prepare for issuing these items, you can pick them from their location in the warehouse and bring them to a pre-draw location that is close to the issue desk. You can then issue the pre-drawn inventory for the work packages for which they were reserved.

Issue tickets, also known as pick tickets, identify the current location of the inventory and the work location where the inventory is needed. An issue list is a printable report that groups together by account, the items to be issued.

When the same inventory item appears in multiple accounts, CAMO lists the total number of items that must be picked for the first entry, and marks each subsequent entry as already picked. This prevents multiple trips to the same bin to pick the same inventory for multiple accounts. For a reserved item that is part of a kit, both the issue ticket and issue list display the In Kit column, which shows the serial number of the kit that contains the item to be picked.

When you attempt to issue inventory, CAMO displays an error or a warning message:

- If a part has usage-based maintenance requirements and the remaining usage for the part is less than the minimum usage required for a task.

- If a part requires controlled reservation and has a serial number or a batch number that does not match the reserved inventory. In this case, you must issue the inventory item that is reserved.
- If a kit is incomplete. In this case, you can either cancel the issue attempt, or acknowledge the warning and proceed to issue the incomplete kit.
- If the ownership type is EXCHRTRN.

CAMO allows you to install serialized inventory for work packages scheduled externally by automatically issuing inventory and canceling the part request, if the following conditions are met:

Note If the AUTO_ISSUE_INVENTORY configuration parameter is enabled, inventory is issued irrespective of the following conditions.

- The work package is scheduled at an auto-issue enabled Vendor Line or Vendor Track location.
- The inventory is serviceable (with a condition of RFI or RFB).
- The inventory is available locally.

Auto-issue details

In general, when a TRK, SER or BATCH inventory is specified as the installed part on a part requirement, and the same inventory is reserved for the corresponding part request, then the inventory is automatically issued when the task is completed and the part request is canceled. In other scenarios when the inventory specified for install does not match the reserved inventory or is otherwise not available, then the part request status changes to AWAITING ISSUE or CANCEL depending on the inventory class.

CAMO only auto-issues inventory that exists the system, exists in the supply location where maintenance is performed, and is currently unissued.

The following table outlines what happens in various scenarios when auto-issue is enabled.

Auto-issue inventory logic

Part request/ Part installed	Part request status changed to		Quantity decrease?		Issued transaction		Issued check box selected	
Part request = Available or Remote Reserved part installed	Bat	Cancel	Bat	Yes	Bat	Yes	Bat	No
	Ser	Cancel	Ser	Yes	Ser	Yes	Ser	Yes
	Trk	Cancel	Trk	No	Trk	No	Trk	Yes

Part request/ Part installed	Part request status changed to	Quantity decrease?	Issued transaction	Issued check box selected
Part request = Available or Remote Unreserved part installed	Bat Await Issue Ser Cancel Trk Cancel	Bat No Ser Yes Trk No	Bat No Ser Yes Trk No	Bat No Ser Yes Trk Yes
Part request = Open or any status *except* Avail/Remote Unreserved part is installed	Bat Await Issue Ser Cancel Trk Cancel	Bat No Ser Yes Trk No	Bat No Ser Yes Trk No	Bat No Ser Yes Trk Yes
Part request = Open Part reserved for another part request is installed	Bat Await Issue Ser Cancel Trk Cancel	Bat No Ser Yes Trk No	Bat No Ser Yes Trk No	Bat No Ser Yes Trk Yes

Note If the auto-issue inventory feature is enabled and a tracked consignment-owned inventory that is to be installed is not issued to a part request, an error message is displayed indicating that tracked consignment-owned inventory cannot be auto-issued and that the inventory must be issued to a part request in order to be installed.

Undo issue

If you issue an inventory item by mistake, if the task the inventory was issued to is unassigned from the work package, or if the item is defective, you can undo the issue action, unless the item is already installed.

When you undo the issue, the part request for the item changes status from ISSUED to OPEN.

If you undo the issue of a part because the task was unassigned from a work package, the Where Needed location and the Needed By date for the task's part request are updated as follows:

- If the task is not assigned to a work package then the Where Needed location is cleared and the Needed By date is set to the task's due date. If the task no longer has a due date, the Needed By date on the part request is cleared.

- If the task is assigned to another work package, the Where Needed location for the part request is updated to the location of the work package. The Needed By date is updated according to the status of the task or work package.

Related concepts

Needed By date

Related tasks

Print issue tickets

Issue inventory for a part request

When the user that requested a part comes to pick it up, you issue the inventory to them.

About this task

As part requests are generated, CAMO automatically prints inventory issue tickets and issue lists. You can review these printed documents to see the inventory to issue.

Steps

1. Find the inventory by doing one of the following:
   - On your to-do list, **Issue** tab, enter your search criteria and click **Search**.
   - On the **Part Request Search** page, enter your search criteria and click **Search**.
2. On your to-do list, **Issue** tab, select the inventory, and click **Issue Inventory**.
3. On the **Issue Inventory** page, provide the requested information and click **Add Part**. Note the following:
   - Received By: name of the person receiving the issued inventory.
   - Issue Barcode: part request barcode.
4. On the **Issue Inventory** page, **Inventory to Issue** tab, **Issue Qty** column, enter the quantity to be issued, and click **OK**.
5. If prompted, enter the password of the person that received the inventory and click **OK**.

> **Note** If the inventory is being issued for a tracked part and is for an install-only task, CAMO asks if you want to create an unexpected turn-in for the removed part, or if you want to link to an already turned-in part. On the **Review Unexpected Turn Ins** page, select an historical task, or click **Create Expected Turn In**.

Print issue tickets

You can print individual issue tickets for a work package from the Work Package Details page.

Prerequisite

- The work package is started (IN WORK) or committed (COMMIT), and a printer is configured for issue printing at the work location.

About this task

Issue tickets, also known as pick tickets, identify the current location of the inventory and the work location where the inventory is needed.

Steps

1. Find a work package by doing one of the following:
   - In the **Barcode Search** field, enter the work package barcode, and then press **Enter**.
   - On the **Task Search** page, in the **Work Package Information** area, provide the information requested, and then click **Search.**
   - On your to-do list, in the **Work Package** column of any tab, click a work package name.
2. From the **Work Package Details** page, click **Print Issue Tickets**.
3. In the **Confirm Printer** window, do the following:
   - Select a printer.
   - Set a **Needed After** date and a **Needed Before** date if you want to define a range of dates to print issue tickets for part requests that have a Needed By date that falls within the date range.
   - Select the **Re-Print** check box if you want to re-print issue tickets that have already been printed.
4. Click **OK**.

On the **Part Request Details** page, in the **Request Information** area, the **Last Printed Date** field shows the timestamp of the last time the issue ticket was printed.

Related concepts

Inventory issue

Related tasks

Set up location printers
Create a printer for a location
Set a default printer for a location

Issue inventory without a part request

About this task

You can issue inventory on an ad hoc basis without a part request. You might need to do this when a technician requests a part to address an unexpected defect, and no task exists for the repair.

Steps

1. On your to-do list, **Inventory To Issue** tab, click **Search**.
2. From the search results, select a part, and click **Ad Hoc Issue Inventory**.
3. On the **Ad Hoc Issue Inventory** page, provide the requested information and click **OK**.
4. On the **Issue Inventory** page, provide the requested information and click **Add Part**.
5. On the **Issue Inventory** page, **Inventory to Issue** tab, **Issue Qty** column, enter the quantity to be issued and click **OK**.
6. If prompted, enter your password and click **OK**.

Undo the issue of inventory

About this task

You can undo the issue of inventory if needed. You might want to do this if the inventory was issued to the wrong user, or if the inventory needs to be reissued to a different user.

Steps

1. On the **Part Request Search** page, enter your search criteria and click **Search**.
2. From the search results, in the **Request ID** column, click the part request.
3. On the **Part Request Details** page, click **Undo Issue**.
4. If prompted, enter your password and click **OK**.

Create ad hoc part requests

About this task

In most cases, CAMO automatically creates part requests for tasks with part requirements. If CAMO does not automatically create a part request, you can create an ad hoc part request.

Steps

1. On your to-do list, click **Create Ad Hoc Part Request**.
2. On the **Select Requested Part** page, enter your search criteria, and click **Search**.
3. From the search results, select a part and click **Assign Selected Part**.
4. On the **Create Part Request** page, provide the requested information and click **OK**.

On the **Part Request Details** page, you can check the status of the part request. A request status of sent means the request has been sent to the appropriate supply chain. A status of acknowledged means the supply chain has received the request and is processing it.

Link to historical turn-in

To avoid creating a new expected turn-in for a removed and turned in part, you might need to link to a completed turn-in when you issue inventory with the same (or alternate) part number as a part that was recently removed from the same configuration slot and turned in to the warehouse.

About this task

When this situation occurs, CAMO prompts you with a message and displays the Unexpected Turn In page.

Steps

1. On the **Unexpected Turn Ins** page, review the list of historical transfers and do one of the following:
   - If a historical turn-in is the corresponding removal for the part you are issuing, select it's radio button.
2. If no historical turn-ins match the part number and configuration slot for the task you are issuing inventory to, then select the **Create expected turn in** radio button.

Related concepts

Turn-ins

Mobile picking and delivery

You can pick and deliver parts requested for task-based or ad hoc part requests using a mobile device.

You can view locally reserved inventory that resides in your department but isn't assigned yet for picking on the Pick Inventory page, Unassigned tab. The Unassigned tab displays:

- the location and date by which it is needed
- the requested quantity
- the details of the reserved inventory.

Hazmat and AOG part requests are indicated using icons on the part request, as follows:

 – AOG priority

 – Hazardous parts

Part requests with AOG priority appear first in the list, while others are sorted by the needed by date. You can also filter part requests as needed. If no filter is applied, all part requests needed within 48 hours of the current date are shown.

You can then assign the part request to yourself for picking. Once a part request has been assigned, it is not available for assignment by someone else and appears on the Pick List tab. You can see part requests that you have assigned to yourself for picking along with the following details:

- the current location of the inventory
- the OEM part number
- the serial or batch number of the inventory
- the needed by date
- the location the inventory is needed
- the aircraft registration number.

Part requests in the Pick List tab are ordered first by the AOG priority, followed by the ascending bin route order and finally by the alphabetical order of the location code.

To pick inventory, you can scan the inventory barcode. Alternatively, you can enter the part and inventory details of either the locally reserved inventory, or a valid alternate part. In the case of part requests for batch inventory, you can pick a partial quantity, if required.

If inventory is stolen through manual reservation, from a picked part request for another part request, it results in the following:

- The reserved inventory is removed from the picked part request.
- The status of the picked part request is Open.
- The pick status of the picked part request is Unassigned, and the user assigned to pick the part is unassigned from the part request.
- If the picked inventory was attached to a pending shipment, the pending shipment is canceled.

After inventory has been picked, the part request appears in the Delivery List tab along with all other part requests that are ready to be issued. Ad-hoc part requests are grouped by the needed by location and all parts requested for a work package will be grouped together. The number of inventory items to be issued is displayed, for each group. Part requests that are grouped by the work packages are sorted by their scheduled date while ad-hoc requests to be issued to a single needed by location are sorted by the nearest needed by date.

To issue inventory you can scan or type the inventory to be issued and the received by user. When you issue inventory, the part request is updated to the COMPLETED pick status.

Pre-draw picked inventory

CAMO can be configured to pre-draw inventory picked to fulfill part requests, until they are ready to be issued. Once the ENABLE_PRE-DRAW_WHEN_PICKING configuration parameter is enabled:

- For ad-hoc part requests, inventory is pre-drawn to the pre-draw location under the supply location.
- For task part requests with work packages, inventory moves to a pre-draw bin created for the work package if one exists. If one does not, a pre-draw bin is created with the work package name.

If you wish to pre-draw picked inventory, then you must ensure that the supply location has a single pre-draw location.

Related tasks

Assign part request for picking
Pick inventory for assigned part request
Issue picked inventory

Assign part request for picking

If local inventory is reserved for a part request. you can use your mobile device to assign yourself to pick for the part request.

Prerequisite

- The part request must be in the AVAIL status.
- The reserved inventory must be in a location assigned your department.
- The part request must be unassigned for picking.

About this task

The to-be-picked part requests are displayed as cards, with the where needed location, needed by date, part number, needed quantity to be picked and the serial or batch number of the reserved inventory.

Steps

1. Go to the **Unassigned** tab of the **Pick Inventory** page.
2. (Optional) To filter the part requests, click , provide information for one or more of the following fields and click **OK**:
   - **AOG**: Select to show the part requests with AOG Priority.
   - **Hazmat**: Select to show the part requests for hazardous materials.
   - **Ad hoc requests**: Select to show ad-hoc part requests.
   - **Destination**: To view all part requests with inventory needed in a particular location, enter the location.
   - **Work Package**: To view part requests belonging to a work package, enter the work package barcode.

- **Needed after**: Select the date to show part requests where the needed by date is after the entered date. If you do not enter a date, the needed after date will be set as 24 hours after the current date.
- **Needed before**: Select the date to show part requests where the needed by date is before the entered date. If you do not enter a date, the needed before date will be set 24 hours before the current date.

> **Note** Your filter choices are retained until you change them.

3. Swipe right to assign the part request.

The selected part request is removed from the Unassigned tab and a message appears if the part request is successfully assigned. Once assigned the part request appears in the Pick List tab. The pick status of the part request is updated to Assigned and the picked by field is updated with your username.

> **Tip** The Unassigned tab displays 50 cards at a time, To view more or new unassigned part requests, refresh the Unassigned tab. You may unassign yourself from a previously assigned part request by swiping left on the part request in the Pick List tab. Once unassigned, the part request moves to the Unassigned tab. The pick status of the part request is Unassigned and your username is no longer displayed in the Picked By field.

What's next

Pick inventory for assigned part request.

Related concepts

Mobile picking and delivery

Related tasks

Pick inventory for assigned part request

Pick inventory for assigned part request

You can use your mobile device to pick inventory for part requests that are assigned to you. You can pick the reserved inventory or you have the option to pick a valid alternate part.

About this task

Your assigned requests are listed on the Pick Inventory page Pick List tab. Part Requests are ordered first by the AOG priority, followed by the bin route order, and finally the location code.

You are allowed to pick a valid alternate inventory for a part request instead of the originally reserved inventory.

Steps

1. Go to the **Pick Inventory** page **Pick List** tab.
2. Locate the part request to be picked. You can scan or enter the location barcode to view the part requests for a specific location. Once you scan a location barcode, the first part request matching the scanned location expands for you to pick inventory.
3. If collapsed, click  to expand the part request, if collapsed.
4. Do one of the following:
   - In the **Scan Barcode** field, scan or enter the barcode of the inventory. Once a valid inventory barcode has been scanned, the part number, and serial or batch number fields are filled. For serial inventory, the quantity field is filled as well. For batch inventory, enter the quantity in the **Quantity** field.
   - If inventory has not been scanned, in the **Part Number**, **Serial Number** and **Quantity** fields, enter inventory details as required.
5. Click **Pick Part**.

After you pick the entire quantity of inventory for a part request, the pick status is updated to In Progress, the reservation is locked and the part request is available in the **Delivery List** tab, ready to be issued. If you have enabled predraw when picking, the inventory is moved to the predraw location. If you pick for a work package, it goes to the newly created predraw bin.

What's next

Issue picked inventory.

Related concepts

Mobile picking and delivery

Related tasks

Assign part request for picking

Issue picked inventory

Issue picked inventory

After parts are picked for a needed by location, you can issue them using your mobile device.

Prerequisite

The pick status of the part request is In Progress.

About this task

When issuing inventory, you cannot issue inventory other than the inventory you picked previously.

Steps

1. Go to the **Pick Inventory** page **Delivery List** tab.
2. Use the **Barcode** field, to filter inventory using one of the following barcodes:
   - **Work package**: filters to be issued inventory that has been requested for tasks by a work package barcode.
   - **Location**: filters to be issued inventory requested for task and ad-hoc part requests by a location barcode.
   - **Part request**: filters to be issued inventory by a part request barcode.
   - **Task**: filters to be issued inventory by a task barcode.
   - **Ad hoc task**: filters to be issued inventory by an ad-hoc task barcode.
   - **Inventory**: Shows inventory matching the entered barcode. For batch inventory, all matching ad-hoc or task based part requests are shown.
3. Click  to expand the container.
4. Scan or enter the inventory barcode or serial number for the inventory to be issued.

   Note If you mistakenly scan inventory you can undo the action by clicking .

5. To update the **Received By** field on the part request, scan the user name of the user receiving the inventory.
6. Do one of the following:
   - If you want to continue to issue inventory for the expanded container, repeat step 4 , and click **Issue**.
   - If you are done picking inventory, click **Issue**.
7. In the **Receipt Confirmation** dialog box, review the inventory details and click **Confirm**.

   Note Only scanned inventory denoted by  are issued.

When you issue inventory, the part request status changes to ISSUED, the transfer created for the inventory is completed and the pick status changes to COMPLETED. The part request details will be updated with the issued date and the received by user.

Related concepts

Mobile picking and delivery

Related tasks

Pick inventory for assigned part request

Shipment receipt

You can receive shipments for items ordered from a vendor, or items transferred from another supply location.

In CAMO, materials receipt includes all aspects of receiving materials at the final destination of a shipment. This includes processing various types of orders and various types of inventory.

When you receive a shipment, you can:

- Record the details of the received shipment.
- Attach serviceability documents that came with the inventory.
- Record technical information about the inventory, which is later verified by quality control or technical records.

Receipt of excess batch inventory

When the quantity of batch inventory received in a shipment, is greater than the ordered quantity, the excess inventory quantity is automatically quarantined. Once quarantined, you can either purchase the excess and inspect them as serviceable items, or return them to the vendor.

The excess quarantined inventory and the ordered inventory have the same batch number but are split across two locations. One batch has a quantity equal to the ordered quantity, in the inventory condition defined for the part on receipt, at the receiving dock location. The other batch has a quantity equal to the excess inventory received, in the quarantine condition, at the quarantine location associated with the receiving dock's supply location.

Routing the extra items to quarantine prevents them from being inspected as serviceable or issued until the discrepancy is resolved with the vendor. The Inventory Details page for the quarantined batch displays a Quarantine tab with details of why the items were quarantined and a link to the purchase order. If needed, a Quarantine Correction Action may be added to contact and coordinate with the vendor.

To inspect the over received inventory as serviceable, the extra items should be purchased by editing the quantity on the original order to match the total quantity received. The ordered quantity

is then updated but the received quantity is regarded as under-received because the quarantined items are not yet serviceable. You can then inspect the batch portion containing the quarantined inventory as serviceable. The batch that is still at the quarantine location may be transferred or put away, as required. If the batch that is in quarantine is transferred to the same location as the serviceable batch, the two batches are merged into a single batch of inventory because they share the same batch number.

You can also return the excess batch inventory items to the vendor on the Inventory Details page for the quarantined inventory. When you return inventory to the vendor, a shipment is created and displayed in the Open Moves tab. Once the shipment is sent, the returned inventory is archived in CAMO. Once the return to the vendor is complete, the received quantity on the purchase order matches the ordered quantity.

Related tasks

Receive inventory shipments
Return inventory to vendors
Send shipments
Edit and add to orders
Transfer inventory

Receive inventory shipments

When inventory has arrived at a receiving location via an inbound shipment, you must receive the shipment to record details such as the quantity, condition and contents of the shipment.

Steps

1. Go to the **Inbound Shipments** tab.
2. Select the required shipment, and click **Receive Shipment**.
3. On the **Receive Shipment** page, **Shipment Lines** tab, provide the required information. Note the following:
   - **OEM Part No**: Select the part that you received. For kit part numbers, you must also specify the part number for each individual item in the kit.

     Note If the part number is not in the drop-down list, it does not exist in the system, or is not a valid alternate. Put the part aside, and do not record it as received in the system. Your material controller or engineering department is responsible for recording the part as a valid alternate part number before it can be received.

   - **Serial No**: Enter the serial number of the received part. If the manufacturer did not provide a serial number, click **Generate Serial Number**. For kit part numbers, you must also specify the serial number for each individual item in the kit.

Note If the inventory being received is for a batch part, the batch number will be auto-generated.

- **Qty**: Enter the received quantity of inventory. A valid quantity for serial parts is 0 (zero), if the particular serialized inventory was not received, or 1 (one) if it was. For inventory belonging to batch parts, the quantity received can be 0 (zero) if none of the particular batch inventory was received, or any other positive quantity, as received.

Note If the received quantity of batch inventory for an order line in a shipment is greater than the ordered quantity, the excess inventory will be automatically routed to quarantine. On receipt of the excess batch inventory, the shipment line will appear as though the entire received quantity will be routed to quarantine, but only the extra quantity is quarantined.

- **Receive Condition**: Select the condition of the inventory on receipt.
- **Manufactured Date**: CAMO enforces entry of this date when you receive inventory that has a requirement definition with a schedule-from-manufacture-date rule. Otherwise the date is not mandatory.

4. Click **OK**.

Note The **Received Date** on the **Inventory Details** page is only updated when inventory is first received into CAMO. If inventory is sent out and re-received, the **Received Date** of each subsequent shipment receipt is displayed on the **Inventory Details** page, **Order Information** area.

Related concepts

Receipt of excess batch inventory

Receive and store customer-supplied parts

Prerequisite

- Gather all or a group of parts that have the same inventory condition to receive them in the same transaction.

About this task

When you receive customer-supplied parts for projects that are yet to be scheduled, you add the parts as inventory in CAMO, and store them in the area of your warehouse that is reserved for the customer.

You can receive and store multiple parts in a single transaction. All parts are processed in one transaction and are assigned the same owner and inventory condition, for example, Ready for Issue (RFI) or Inspection Required (INSPREQ). It is important to receive and store parts that have different inventory conditions in separate transactions.

> **Note**
>
> The instructions below only apply when receiving parts that have individual serial numbers. Parts shipped in batches that have a common batch number for all items cannot be processed in this procedure. To receive customer-supplied batch parts, you receive them as you would receive your own inventory using the Receive Shipment button. In the inventory details page for the batch, change the owner of the parts to the correct customer.

Steps

1. On your to-do list, **Inbound Shipment** tab, click **Create and Store Inventory**.
2. On the **Create and Store** page, in the **Details Common To All Inventory** area, provide the required information. Note the following:
   - **Owner**: Select the customer that owns this inventory.
   - **Condition**: Select the inventory condition to apply to all parts you are processing in this transaction.
3. In **Part Number Lookup**, enter the part number of an item in the shipment, and click Add Part.
4. In the **Inventory to be Created** area, enter the serial number of the part, and press **Enter** to go back to the **OEM Part No**. field.
5. Repeat steps 3 and 4 to enter all remaining parts.
6. Click **Create and Store Inventory**.

   A summary page opens listing all the parts created and all parts that were not created in CAMO because of errors.

What's next

If you want to add more information about a specific part, for example, the part shelf-life, copy the serial number, and use Inventory Search to access and edit the inventory record.

Record the technical details of received inventory

Steps

1. On the **Shipment Details** page, **Shipment Lines** tab, select the inventory, and click **Edit Inventory**.
2. On the **Edit Inventory** page, enter the requested information, and click:
   - **Next** to move to the next editing page.
   - **Apply** to save your changes and continue working.
   - **Previous** to return to the previous editing page.
   - **Finish** to save your changes and return to **Shipment Details**.
   - **Cancel** to discard your changes and return to **Shipment Details**.

Inspecting inventory

When an inventory item has a condition of inspection required, the item appears on a quality inspector's To-Do List, Inspection Required tab. The inventory must be inspected before it is serviceable.

You update the inventory record with usage values, airworthiness directives, service bulletins, missing sub-components, and any other relevant information and then inspect the item.

If you previously owned an item that you are inspecting after receipt, CAMO unarchives the record and reinducts the inventory (see the inventory History tab, Additional sub-tab for notes). You update the compliance records with any events that occurred between the time the item left and returned to your organization.

You have the following inspection options in CAMO:

Inspect as serviceable

After you inspect inventory as serviceable, it is in ready for issue (RFI) condition and is routed to the serviceable staging area.

If inventory is serviceable, but is missing mandatory sub-components, you can inspect it as serviceable if the Ready for Build feature is enabled. After inspection, this incomplete, serviceable inventory is in ready for build (RFB) condition and is routed to the unserviceable staging area.

Inspect as unserviceable

After you inspect inventory as unserviceable, it is in REPREQ condition and is routed to the unserviceable staging area.

Quarantine

Inventory that is missing paperwork or requires additional investigation can be quarantined. QUAR-condition inventory is routed to the quarantine holding area.

Inventory becomes INSPREQ in the following workflows:

- Most part numbers are created with the **Force Inspection on Receipt** check box selected. When these parts are ordered and the shipping clerk receives inventory at the dock, CAMO automatically creates a new inventory record with inventory in the INSPREQ condition.
- When maintenance completes a component work package for inventory with a part number that requires inspection, and when the global value for the FORCE_INSP_REPAIR_RELEASE configuration parameter is true, the inventory condition changes to INSPREQ.
- At any time, if someone manually clicks the **Mark as Inspection Required**, the inventory condition changes to INSPREQ.
- When an agent creates an order and selects the **Force Inspection on Receipt** check box, then when the inventory is received, the inventory record is created in CAMO with the INSPREQ inventory condition. (If a part number requires inspection, agents don't need to select the Force Inspection on Receipt check box on the order).
- When you create new inventory, you can select the INSPREQ condition.
- If someone clicks **Mark as Inspection Required** for a kit, the kit's condition changes to inspection required and the condition of kit inventory items whose part numbers have the Force Inspection on Receipt check box selected (on their Part Details page) are changed to INSPREQ.

Inventory condition

The inventory condition provides useful information about what you or CAMO can do with the inventory.

The inventory condition can be set manually, for example, when you create a new inventory record. It can also be changed automatically in the course of CAMO workflows. For example, if a calendar-based task becomes overdue while an RFI inventory item is in storage, CAMO changes its condition to REPREQ. Many of the operations performed by material control and quality control personnel also affect inventory condition.

By default, CAMO includes a set of inventory condition codes described in the following lists. The codes and their labels are configurable, so the conditions you see may be different if your organization customized the codes. These inventory codes are applicable to both aircraft and components.

Ready for issue - RFI

The item is serviceable, ready for issue, and can be reserved, issued, and installed. The item is likely in the warehouse.

Inventory becomes RFI in following workflows:

- Inventory is received at the dock and requires inspection. An inspector inspects the inventory as serviceable.

- Inventory is received at the dock and does not require inspection. It is automatically RFI when it is received and its inventory record is created.
- A work package is completed.
- A component work package is completed, but the inventory has a condition of INSPREQ. An inspector inspects the inventory as serviceable.

Ready for build - RFB

The item is serviceable, but incomplete. If the Ready for Build feature is enabled, assembly or tracked inventory that's serviceable, but missing mandatory sub-components can have an RFB condition in the user interface. In the database, RFB inventory is RFI inventory that is not complete. The RFB condition is used for a limited number of part types. Inventory in RFB condition can be issued, manually reserved, and installed on an aircraft.

In service - INSRV

The item is in service and is installed on a parent inventory item such as an assembly or aircraft. The condition of an item changes to INSRV when it is installed on a parent inventory.

Repair required - REPREQ

The item is unserviceable and needs to be repaired. Inventory changes to REPREQ condition when an inspector inspects the inventory as unserviceable or a component work package is completed as unserviceable. Inventory in REPREQ condition cannot be reserved, issued, or installed.

In repair - INREP

The item is unserviceable, but has an open repair order.

Archived - ARCHIVE

The inventory item was sold, exchanged, or loaned. It (potentially) remains in service with another organization, and can be unarchived if it returns to your organization.

The following inventory codes are only applicable to components.

Awaiting inspection - INSPREQ

Most inventory that's received at the dock requires inspection. Inspection can be required after work packages are completed, or at any time, inventory can be marked as requiring inspection. Inventory in INSPREQ condition cannot be issued and installed.

Quarantined - QUAR

The item is in the quarantine location. Inventory can be routed to the quarantine location when received, inspected, or at any time. Typically, inventory is quarantined if paperwork is missing or contains discrepancies.

Condemned - CONDEM

Items that require a formal destruction procedure cannot be scrapped directly. These items must be changed to a condition of CONDEMN, at which point they are inspected and formally

destroyed with appropriate destruction methods and records. After physical destruction, you SCRAP the inventory in .

Scrapped - SCRAP

The item was scrapped. The inventory records identify the item as being at the SCRAP location. The SCRAP location is a hypothetical location, as the actual scrapped inventory has been disposed of, recycled, or sold as scrap. There should be no physical inventory with a condition of SCRAP. Inventory items with a condition of SCRAP are unserviceable. Inventory items that do not require a formal disposal process can be scrapped at any time, from any condition other than ARCHIVE.

Some organizations use configuration parameters that alter what you can do with inventory in different conditions.

RFB inventory condition

The Ready for Build (RFB) condition is used for assembly or tracked class inventory items that you want to receive and inspect as serviceable, reserve, issue, and install on aircraft, even though they are missing mandatory sub-components. Inventory in RFB condition is serviceable but incomplete.

Some components are received with serviceability tags, but they require work in a shop, on the maintenance floor, or after they are installed on an aircraft. The work might be done before the item is installed on an aircraft, but it must be done before an aircraft with these components installed can be released from maintenance. Engines are one example of inventory that can use an RFB workflow.

An engine core can be received as serviceable with a post-inspection condition of RFB. After inspection, the engine is listed on the Unserviceable Staging tab where a repair router can filter the list to find RFB items and see the reason for repair as RFB. The repair router creates a work package and schedules it to a shop location. In the shop, after the engine is partially dressed the component work package can be closed (with warnings) as serviceable and afterward, the inventory condition is RFB. In CAMO, this inventory remains in the SHOP location - the actual physical location of RFB condition items varies between operators, but RFB inventory cannot be put away and should be segregated from serviceable inventory. A material controller can reserve the RFB condition engine, it can be issued and installed on an aircraft, and the final dressing done as part of a work package for the aircraft. When RFB condition inventory is installed on an aircraft its condition changes to INSRV, but when the aircraft is being released from its work package any missing mandatory sub-components are flagged.

If work is completed in the shop and the work package is closed with no missing mandatory sub-components, the inventory condition changes to RFI. If work is completed in one shop, but the item is still in RFB condition and must be routed to another shop, you can do one of the following:

- Create a transfer to the next shop or to unserviceable staging.
- Create and schedule the next work package.

RFB differs from RFI and REPREQ-condition inventory in the following ways:

Point of comparison	REPREQ	RFB	RFI
Inventory class	All classes	Assembly or complex tracked	All classes
After inspection as serviceable	N/A	RFB condition - routed to unserviceable staging	RFI condition - routed to serviceable staging
After work package completed as serviceable	N/A	RFB condition	RFI condition
Put away (auto or manual)	No	No	Yes
Auto-reserve	No	No	Yes
Stored	Unserviceable staging	Shop location	Serviceable store location
Manually reserve	No	Yes	Yes
Issue and install on aircraft	No	Yes	Yes
Turn in or undo issue	Routed to unserviceable staging	Routed to unserviceable staging	Routed to serviceable staging
Include in kits	No	No	Yes
Condition in the database	REPREQ	RFI	RFI
Completeness bool value	True or False	False	True

To use the Ready for Build feature, it must be enabled. Other configuration parameters affect what you can do with inventory in serviceable RFB condition. For more information, see the *Operator Administration Guide*.

If you enable this feature, roles such as inspectors, repair routers, shop controllers, and material controllers that inspect inventory, route to repair, complete work packages, and fulfill part requests should be familiar with the inventory that can be in RFB condition in your organization.

The inventory condition is set or changes to RFB in the following workflows:

- During the receiving inspection, the inspector updates the inventory record, records the missing mandatory sub-components, and then inspects the item as serviceable.
- When closing a work package, a shop controller can accept warnings that mandatory sub-components are missing and complete the work package.
- In a removal task, if the component is removed for a serviceable reason such as access or rob, if the removed component is missing mandatory sub-components, its inventory condition changes to RFB.
- When an incomplete, serviceable component is turned in, the storeroom clerk selects the RFI condition.
- During data loading, incomplete but serviceable inventory is loaded.

The RFB workflow can vary depending on your receiving process. If a component is received, inspected as serviceable and afterward technical records personnel update the inventory details and detach missing sub-components, the inventory is in REPREQ condition. If the inventory should be in RFB condition, it must be marked as inspection required and inspected.

If an existing component is in RFB condition and a sub-component is removed, its condition changes to REPREQ. If the item should remain in RFB condition, it must be marked as inspection required and inspected.

You cannot search for inventory by RFB condition, but in inventory search results and on many details pages, inventory is shown as RFB-condition inventory.

Although the RFB condition is shown in the user interface, there is no RFB condition in the database. In the database, serviceable, but incomplete inventory has the RFI condition. RFB inventory is tracked financially the same as RFI inventory.

Ready for Build does not support tools, although you are not prevented from inspecting incomplete tools as serviceable, or closing work packages for incomplete tools as serviceable.

Related concepts

Serviceable inventory inspection

Serviceable inventory inspection

Inventory that is inspected as serviceable can be reserved, issued, and installed on an aircraft. Inventory can be inspected when received or at any other time.

What changes when inventory is inspected as serviceable?

Inspection as serviceable results in the following changes:

- The inventory condition changes to ready for issue (RFI), or if an inspector inspects an incomplete item as serviceable, the inventory condition changes to RFB.
- If requested, CAMO prints a serviceable part tag.

- If the inventory item is assigned to an on-order part request, and if the originating part request is a stock level replenishment, CAMO changes the status of the part request to COMPLETE.
- If the item was requested in response to a different type of part request, CAMO changes the status of the part request to AVAILABLE.
- CAMO attempts to reserve the inventory. If the inventory is not reserved through auto-reservation, CAMO creates a put-away transfer record so that the items can be stored in the warehouse (items appear on the To Be Shelved tab). If only a portion of the items in a batch are auto-reserved, CAMO creates a put-away ticket for only the remaining items.
- The item is immediately available to the baseline synchronization process. After you inspect the item as serviceable and update all inventory records, depending on your permission settings, you might need to set the inventory item to allow manual synchronization.
- If an inventory item is received from an internal location such as a repair shop, CAMO treats the situation as the inspection of a newly-repaired item, and creates a new turn-in transfer record with the destination of serviceable staging. The transfer record is displayed on the storeroom clerk's To Do List, Turn In tab.
- For items that have not been inspected before, an INSP (receive inventory) financial transaction is recorded.
- For newly received items, the quantity increase is recorded.

What prevents inspection of inventory as serviceable?

The following conditions prevent inventory from being inspected as serviceable unless the ALLOW_AUTO_COMPLETION configuration parameter is set to true. This parameter is used to speed up inspection of inventory particularly when received from repair vendors – when inspectors accept warnings and inspect as serviceable, open tasks, faults, and work packages are automatically completed. The impacts of enabling this parameter are wide-ranging.

- You receive a repaired part from an external repair vendor along with paper work documenting the work that was done, but in CAMO, there's still an IN WORK work package for the item with open tasks and faults. Someone with the correct permissions must manually complete the open tasks, faults, and work packages.
- The inventory has overdue tasks and faults. You can't inspect the item as serviceable until overdue tasks and faults are manually completed.
- The inventory has open faults with a severity of AOG or UNKNOWN (severities that cannot be deferred with deadlines).
- The inventory has less usage or time remaining before a task is due than is required in order to release the item from maintenance as serviceable. (The minimum is specified in a task definition).
- The quantity of an item received on a shipment is greater than the quantity ordered on the purchase order. The extra items are automatically quarantined and cannot be inspected as serviceable. If you decide to keep, instead of return the extra items to the vendor, the purchase

order must be edited to change the order quantity to the received quantity. The PO must be re-issued, and possibly re-authorized (depending on the change in dollar amount for the PO). After the PO is re-issued, you can inspect the extra items as serviceable.

- The inventory is in REPREQ condition.

If the ALLOW_AUTO_COMPLETION configuration parameter is set to true, inventory with all of the above conditions can be inspected as serviceable.

Related concepts

RFB inventory condition

Related tasks

Allow or prevent synchronization

Inspect inventory as serviceable

Inventory items that are received and that require inspection, appear on your Inspection Required To-Do List tab. If an item is serviceable, you update the inventory record, inspect it as serviceable, and attach a serviceable part tag.

Prerequisite

Update the inventory record. This is generally good practice, but if Ready for Build is enabled and you want to inspect an item with missing mandatory sub-components as serviceable, you must first update the inventory record to remove the missing sub-components. For new items, edit the inventory details to clear the check boxes of the missing sub-components. For items with existing inventory records, you detach the inventory.

Steps

1. To find the inventory, do one of the following:
   - On your to-do list, **Inspection Required** tab or **Quarantine** tab, select one or more items, and click **Inspect as Serviceable**.

     Note Incomplete items, which are missing mandatory, tracked, sub-components, must be inspected one at a time.

   - Scan or enter the purchase order, shipment, or inventory barcode, go to the **Inventory Details** page, and click **Inspect as Serviceable**.
2. On the **Inspect As Serviceable** page, provide the required information. Note the following:
   - **Alert Technical Records**: Select the technical records department to review the item if the inventory has a maintenance program or was received after a repair.

Note When inspecting an incomplete item as serviceable, you see a warning with a list of the missing sub-components.

3. If prompted, enter your password and click **OK**.
4. If you selected the **Print Serviceable Part Tag** check box, the **Serviceable Part Tag** page opens.

   Review the contents of the tag, and make sure that it is accurate.
5. Print the tag using your browser's **Print** button, and physically attach the tag to the inspected item.

Related tasks

Detach inventory items
Edit sub-component details

Attach serviceability documents to received inventory

About this task

Once you have determined that received inventory is serviceable, you can attach the serviceability documents that came with it for storage in CAMO.

Steps

1. Scan the document.
2. On the **Shipment Details** page, **Shipment Lines** tab, **Line Description** column, click the inventory name.
3. On the **Inventory Details** page, **Details** tab, **Attachments** area, click **Add Attachment**.
4. On the **Add Attachment** page, in the **Attachment** area, drag and drop the file or click to select a file.
5. Enter the requested information and click **OK** or to add another attachment, click **OK and Repeat**.

The document is available in the **Attachments** area.

Unserviceable inventory inspection

Not all inventory is received at the dock in serviceable condition, so inspectors can inspect inventory as unserviceable.

If you want to accept an unserviceable item into stock with the intention of repairing it, you must inspect the item as unserviceable so that its condition changes to repair required REPREQ.

The **Inspect As Unserviceable** button is only visible for items that meet these conditions:

- Item is received from a vendor for a purchase order, repair order, or exchange order.
- Item has not been inspected yet.
- Item is not a KIT.

When you inspect inventory as unserviceable and there is an associated IN WORK component work package, the work package must be completed as unserviceable before you can inspect as unserviceable.

Inspection as unserviceable results in the following changes:

- The inventory condition changes to REPREQ.
- If requested, CAMO prints an unserviceable part tag.
- CAMO moves the item to the Unserviceable Staging tab.
- An INSP (receive inventory) financial transaction is recorded.
- The order associated with the shipment can be closed and the invoice can be paid.

Related concepts

Unserviceable work packages

Unserviceable work packages

Typically, when you complete a component work package, the item is repaired and serviceable. However, in some situations you may need to complete a work package before the item has been fixed. In these situations, you complete the work package as unserviceable.

For example, you may need to complete a work package as unserviceable when:

- You start a work package, inspect the item, and then realize that you do not have the correct tools or skills to perform the repair. In these situations, you need to close the existing work package even though the item is still unserviceable, and send it for repair elsewhere.
- As a quality inspector, you receive shipment of inventory for a repair order, but the inventory is not in serviceable condition.

The **Complete Work Package As Unserviceable** button appears on the **Work Package Details** page after all tasks in the work package are completed. Any tasks that were not performed for the work package, must be unassigned before you can complete the work package.

When you complete a work package as unserviceable, CAMO does not assess the inventory for release as it does when work packages are completed normally. CAMO does not do the following:

- Display the Preview Release page.
- Check for overdue tasks, AOG faults, missing components, etc.
- Auto-fill holes on mandatory components.

If the component was repaired by an internal shop, then after the work package is completed as unserviceable, CAMO sets the the condition of the item to repair required (REPREQ).

If the component was repaired by an external vendor, then after the work package is completed as unserviceable, the condition of the item is inspection required (INSPREQ). If you then inspect the inventory as unserviceable, CAMO then changes the condition of the item to repair required (REPREQ).

Related tasks

Complete component work package as unserviceable

Inspect inventory as unserviceable

Inventory items that are received and that require inspection, appear on your Inspection Required To-Do List tab. If an item is unserviceable, you inspect it as unserviceable, attach an unserviceable part tag, and physically separate this inventory from serviceable items.

Prerequisite

Before you record that you inspected inventory as unserviceable, update the inventory details with any technical information that's appropriate for the item. If there is a work package associated with the unserviceable inventory, complete the work package as unserviceable.

Steps

1. Find the inventory by doing one of the following:
   - On your to-do list, **Inspection Required** or **Quarantine** tab, select the item.
   - Entering the item's barcode in the **Search** field.
2. Click **Inspect As Unserviceable**.
3. On the **Inspect as Unserviceable** page, provide the required information. Note the following:
   - **Alert Technical Records**: Select the technical records department to review the item if the inventory has a maintenance program or was received after a repair.

   If the option to **Inspect As Unserviceable** is unavailable, the work package may need to be closed.
4. Enter your user name and password if prompted.
   The **Unserviceable Part Tag** opens.
5. Attach the **Unserviceable Part Tag** to the inventory and place it in the appropriate area.

The inventory now appears on the **Unserviceable Staging** tab.

Related tasks

Complete component work package as unserviceable

Fail partial batch inventory inspections

When you receive a shipment of batch inventory that contains some unserviceable items, you receive part of the batch as serviceable and part of it as unserviceable.

Steps

1. Find the inventory items by doing one of the following:
   - Go to your to-do list, **Inspection Required** tab.
   - Search for the item using the inventory barcode or order number.
2. Quarantine the inventory by doing one of the following:
   - On your to-do list, **Inspection Required** tab, select the batch inventory and click **Quarantine Inventory**.
   - On the **Inventory Details** page, click **Quarantine Inventory**.

   a) Enter your user name and password, if prompted.
3. On the **Inventory Details** page, click **Mark as Inspection Required**. In the **Quantity** field, enter the number of serviceable items in the shipment.
4. On the **Inspection Required** page, select the items you just marked as inspection required and click **Inspect As Serviceable**.

   The items are now ready for issue (RFI).
5. (Optional) To remove items from quarantine, on the **Quarantine** page, select the remaining items, and click **Inspect As Unserviceable**.

Quarantine inventory

When you inspect newly received inventory and you find discrepancies such as missing documentation, or a difference in the type of repair an item requires, quarantine the inventory until the discrepancies are resolved. Items can be quarantined at any time.

Steps

1. Find the inventory item by doing one of the following:
   - On your to-do list, **Inspection Required** tab, **Pending Expiry** tab, or **Unserviceable Staging** tab, select an inventory item, and click **Quarantine Inventory**.
   - On the **Inventory Details** page, click **Quarantine Inventory**.
2. On the **Quarantine Inventory** page, provide the information requested, and click **OK**.
3. If prompted, enter your password and click **OK**.
4. (Optional) Click **Print Quarantine Tag**.

What's next

After you mark the inventory as quarantined, you must physically place the inventory in your organization's quarantine holding area.

Kit inspection

Kits can be ordered or assembled on-site. A kit can contain some part numbers that require inspection when the inventory is received and other part numbers that do not require inspection on receipt. When a kit is ordered and received, if any inventory in the kit requires inspection, then the kit itself has the inventory condition of INSPREQ (inspection required).

The kit can be inspected as serviceable only after all inventory items in the kit are in serviceable RFI (ready for issue) condition.

Kits cannot be inspected as unserviceable because kits are not repairable. An ordered kit that's not serviceable, is typically returned to the vendor.

If a kit is assembled or later when a kit is in use, you may want to mark the kit or one of its inventory items as requiring inspection.

- If you click the **Mark as Inspection Required** button for the kit, the kit's condition changes to inspection required and the condition of kit inventory items whose part numbers have the **Force Inspection on Receipt** check box selected (on their Part Details page) are changed to inspection required. Inventory items whose part numbers don't have the **Force Inspection on Receipt** check box selected (on their Part Details page) remain in RFI condition.
- If you click the **Mark as Inspection Required** button for an inventory item in a kit, its condition changes to inspection required. You can do this without removing the item from the kit, but you must remove the item from the kit if it is unserviceable. If all items included in the kit are RFI, but some items are missing from the kit, you can mark the kit as serviceable. In this scenario, the kit's inventory condition becomes RFI, but the kit's status remains incomplete.

If you mark a kit with no missing items as serviceable, CAMO updates the inventory condition for the kit to RFI and updates the kit status to COMPLETE. Complete kits in RFI condition can be automatically reserved.

Scrapping and condemning

When repairable inventory items are worn or damaged beyond the limits authorized by the manufacturer, have exceeded their life limits, or are too expensive to repair, you scrap them.

If you plan to scrap inventory items, but must wait for a Certificate of Destruction or for a custody change, you can condemn the item first. Condemning inventory items cancels existing part reservations and prevents auto-reservation from reserving the condemned item for new maintenance tasks.

You cannot condemn kit inventory until you have removed all of the items that the kit contains. However, you can condemn the items that are included in a kit without removing them from the kit.

You can scrap inventory items without condemning them first. Scrapping changes the inventory condition to SCRAP, marks the inventory record as locked, and changes the location to SCRAP.

Before scrapping inventory items, you can attach the Certificate of Destruction to the Inventory Details record.

If you sent the item to a vendor for repair and then decide not to repair it, instead of paying to ship it back, you can scrap the item.

Batch class inventory cannot be unscrapped, but if you accidentally scrap an item of another class, you can unscrap it. In the case of an aircraft, an unscrapped aircraft is not returned to the exact same place in its maintenance program. For this reason, the permissions to scrap and unscrap aircraft or assembly class inventory are separate from the permissions to scrap and unscrap tracked, serial, or kit class inventory.

Scrapping is primarily done for rotable inventory. Unless marked as repairable, batch items are not tracked after they are issued and their removal during maintenance tasks isn't recorded.

Related concepts

Scrapping inventory at vendor

Condemn inventory

If you plan to scrap inventory items, but must wait for a Certificate of Destruction or for a custody change, you can condemn the item first. Condemning inventory items cancels existing part reservations and prevents auto-reservation from reserving the condemned item for new maintenance tasks.

Steps

1. Find the inventory by doing one of the following:
   - On your to-do list, **Unserviceable Staging** tab or **Pending Expiry** tab, select an inventory item, and click **Condemn Inventory**.
   - On the **Inventory Details** page, click **Condemn Inventory**.
2. On the **Condemn Inventory** page, provide the requested information, and click **OK**.
3. If prompted, enter your password and click **OK**.

What's next

After you record the part as condemned in CAMO, you print a part tag, and physically move the part to your inventory department's condemned inventory area.

Scrap inventory

When repairable inventory items are worn or damaged beyond the limits authorized by the manufacturer, have exceeded their life limits, or are too expensive to repair, you scrap them.

About this task

To store the Certificate of Destruction in CAMO, attach it to the inventory record before you scrap the item.

Steps

1. Do one of the following:
   - Go to the **Condemned** tab and select an inventory item.
   - Do an **Inventory Search** or **Inventory Search by Type** and select an inventory item.
   - Go to the **Inventory Details** page.
2. If required, attach the Certificate of Destruction to either the inventory record or the order.

> **Tip** If you are on a search page or the Condemned tab, click the inventory item to open its Inventory Details page.

3. Click **Scrap Inventory** or if you're on the Inventory Details page of an aircraft or assembly, click **Scrap Assembly**.
4. On the **Scrap Inventory** or **Scrap Assembly** page, provide the requested information, and click **OK**.

Unscrap inventory

If inventory was prematurely or mistakenly scrapped in the system, you can undo the transaction.

About this task

You can unscrap aircraft, assembly, tracked, serial, and kit inventory.

You cannot unscrap batch inventory.

Steps

1. Open the **Inventory Details** page for the scrapped inventory.
2. Click **Unscrap Inventory** or **Unscrap Assembly**.
3. On the **Unscrap Inventory** or **Unscrap Assembly** page, enter the required information and click **OK**.

If you unscrapped an aircraft, it is not returned to the exact same place in its maintenance program. You must review the inventory record.

Repair routing

Inventory that is unserviceable or that must be routed to a shop for assembly is listed on the Unserviceable Staging tab. The unserviceable staging clerk or repair router reviews what needs to be done and decides where to route components for the appropriate action.

Inventory that appears on the Unserviceable staging tab is typically in REPREQ condition. These items were inspected as unserviceable upon receipt, removed during a maintenance visit and turned in, or marked as Repair Required.

If Ready for Build is enabled, the list also displays inventory in RFB condition. These items are serviceable, but incomplete and need to be routed to the appropriate shop for assembly, completion, or dressing.

You can filter the items that are shown on the list to find and work with specific types of items. See *Customize your view of the Unserviceable Staging tab*.

On the Unserviceable Staging tab, you can review what shop or vendor locations are assigned or are capable of repairing or doing the required work. You can take the following actions to deal with the items on your list:

Route components for internal repair

1. Create a work package for the component. See *Create work packages for an aircraft or component*.
2. Schedule the work package to an internal shop location. See *Schedule work packages to internal maintenance locations*
3. Optionally, when the component is physically moved to the shop, you can click the Move to Shop button. This changes the inventory location and removes the component from the Unserviceable Staging tab.
4. When the work package is started the component appears on your Out For Repair tab.

Route components for external repair

1. Create a repair order for the component. See *Create a repair order for unserviceable inventory*. This creates an outbound shipment. See *Repair orders*. After the shipping clerk sends the shipment, the component appears on the Out For Repair tab.
2. If you are handing over responsibility for the order to a repair purchasing agent, edit the RO Details to change the name of the Purchasing Contact.
3. Request authorization for the repair order. *Request order authorization*.
4. Issue the order. An inbound shipment is automatically created. See *Issue orders*.

Create an exchange order with an external vendor

Exchange an unserviceable component for a serviceable one. See *Create exchange orders for unserviceable components*. Alternatively you can convert a repair order line to an exchange order line. See *Convert repair order line to exchange order line*.

Condemn inventory

If as part of your work, you determine that unserviceable inventory cannot be repaired or exchanged for serviceable inventory, or that the repair is too costly, you can condemn it. It is then moved to the Condemned tab. See *Condemn inventory*.

Quarantine inventory

If you determine that inventory could be returned to service pending an action that's not repair-related, you can quarantine the inventory. It is then moved to the quarantine location and tab. See *Quarantine inventory*.

You can monitor items on your To Do List's, Unserviceable Staging, Out For Repair, Condemned, Quarantine, and My Open Orders tabs.

Tip The Out For Repair tab lists INREP condition components that are out of the warehouse for repair.

Customize your view of the Unserviceable Staging tab

On the Unserviceable Staging tab, to narrow down the list of inventory and tools that are displayed and focus on specific items, you can specify values for filters. You can also select which columns you want displayed in the tabs by selecting the required display columns for your view.

About this task

Your filter and column choices are retained until you reset the filters or change them.

Steps

1. Go to the **Unserviceable Staging** tab, and on the Inventory or Tools sub-tab, click **Options**.
2. Enter values for the filters as follows:

- **Part Type**: Select one or more part types, as required.
- **OEM Part No.** : Enter a specific OEM Part Number, or a part number that starts with the value you enter followed by %. This retrieves inventory or tools that either match or start with the value given for the filter.
- **Vendor/Shop**: Enter a specific vendor code to filter by repair vendor, exchange vendor or the location code for the shop. You can also enter a vendor code or location code that starts with the value you enter followed by % to retrieve inventory or tools that start with the value given.
- **Owner**: Enter a specific owner code or an owner code that starts with the value you enter followed by %. This retrieves inventory or tools that either match or start with the value given for the filter.
- **Supply Location**: Enter the location code of the required supply location and select the corresponding one from the drop-down list.
- **Location Type**:

  - On the **Inventory** sub-tab: Select **USSTG** (Unserviceable Staging) and/or **Dock**.
  - On the **Tools** sub-tab: Select **USSTG** (Unserviceable Staging) and/or **Other**. Other includes any location other than USSTG (Unserviceable Staging).
- **Maximum No. of Rows**: Enter the maximum number of inventory or tool records that you want displayed.

  Additionally on the **Inventory** sub-tab you can filter by:

  - **Turn-In from Date**: Enter the date after which you want to view all inventory that was turned in.
  - **Turn-In to Date**: Enter the date up to which you want to view all inventory that was turned in.
  - **Inventory condition**: **REPREQ** (repair required) and/or **RFB** (ready for build). This filter appears only if the configuration parameter for it is enabled for RFB Inventory Items.

Note Click **Reset Filters** to apply default values to the filters.

3. (Optional) Select or clear the **Display Columns** check boxes for the columns you want to include in your unserviceable staging view.
4. Click **OK.**

Pre-draw management

For each work package that is scheduled to start in the next 24 hours, CAMO creates a pre-draw bin to hold the pre-drawn inventory items until they are issued.

CAMO treats pre-draws as transfers from their current bin to the pre-draw bin. Items that are pre-drawn to fill ad hoc part requests do not have a pre-draw bin. These items can be kept at the main pre-draw location, which has the location type PREDRAW.

An CAMO job that runs daily, or as configured, identifies the part requests that must be filled in the next 24 hours, and that do not have an associated issue transfer record (issue ticket). For each part request that the job finds, it performs the following actions:

- Generates an issue transfer record that identifies the current location of the item and its destination.
- Creates an issue ticket for this transfer and, if configured, prints the issue ticket. CAMO prints individual issue tickets for items in a work package. Items that have pending transfers do not appear on the issue tickets.
- Locks the part reservation so that the inventory is not evaluated during the auto-reservation process unless there is no other inventory available in the local supply location to fulfill a higher ranked part request. Authorized users can override locked reservations to steal the reserved inventory to fulfill higher ranked part requests.

Predrawing inventory

You can predraw inventory in two ways: you can use an issue ticket that lists the inventory to predraw, or you can use a hand-held device (a PDA) that displays the predraw requests that have been assigned to you.

When you predraw inventory, CAMO does the following:

- When you pick only some of the items in a part request, CAMO splits the part request. It moves the items that you picked to the predraw location, and creates a new part request for the remaining items.
- When the barcode or the serial number for an item that you pick is different from the serial number that is specified on the part request, CAMO updates the part request with the serial number of the item that you picked. The item with the serial number that was originally on the part request remains available for new reservations.
- When the item you pick is included in a kit inventory item, CAMO removes the item from the kit's inventory record.

After the inventory has been predrawn from the shelf, it can be issued to the requesting technician.

Predraw inventory electronically

About this task

You can use a handheld electronic device, such as a barcode scanner or tablet, to predraw inventory before it is issued.

After you have pre-drawn the inventory, CAMO moves it to the predraw location associated with the work package and, optionally, prints an issue ticket.

Steps

1. On your handheld device, select **Portable Pre-Draw**.
2. Select **Pre-Draw Inventory**.
3. On the **Select Warehouse** page, select your supply location.
4. On the **Select Maintenance Type** page, select a maintenance type.
5. On the **Pre-Draw To Do List**, click **My Pre-Draws**.
6. On the **My Pre-Draws** page, for the part you want to pre-draw, click **Pre-Draw Inventory**.
7. Find the inventory item in the warehouse and, using your handheld device, scan the inventory.

> **Tip** Alternatively, you can enter the serial number or batch number into your handheld device.

8. For batch inventory, enter the quantity being picked.
9. Click **OK**.

Locate predraw inventory

About this task

For each of your organization's locations, you can view predraw status, pending predraws, and predraws assigned to specific CAMO users on your to-do list's Predraw Monitoring tab.

Steps

1. On your to-do list, **Predraw Monitoring** tab, in the Location area, click **Select Location** .
2. In the **Select Warehouse** dialog box, select a location.

Unassign users from predrawing inventory

About this task

You can unassign a storeroom clerk from an inventory predraw at any time. You might want to do this if the clerk cannot perform the predraw, or to manage the workload of your staff.

Steps

On your to-do list, **Predraw Monitoring** tab, **Assigned Predraws** area, select a request and click **Unassign**.

Warehouse management

Warehouse model

Airports can have none, one, or multiple warehouses for storing inventory that is ready to be issued.

In CAMO, warehouses are represented as serviceable store locations with the location type SRVSTORE. You can model large warehouses as a hierarchy of store locations. For example, you can model floors, aisles, and shelves as locations of type STORE, and organize them in a hierarchy. Actual inventory items are held in bins, which have the BIN location type.

In larger airports with multiple warehouses (SRVSTORE), inventory received at the dock is typically put away in the main warehouse and transferred from there to other warehouse SRVSTORE locations that serve shops, hangars, and line maintenance locations.

Related concepts

Bins and bin levels

Stock numbers

Related reference

Material storage location types

Bins and bin levels

Bins help you to organize and locate items stored in a warehouse. For a bin location, bin levels specify the part number, owner, the minimum, and the maximum number of parts that can be stored in the bin.

One bin location can have one or more bin levels, depending on how you want to organize the bin. For one bin location you might create more than one bin level if:

- The bin contains different part numbers.
- The bin contains inventory with different owners.

Each bin can contain inventory with the same part number or can contain part numbers that can be used interchangeably as alternates. Items with the same part number might also be stored in more than one bin. For example, for a frequently used part, you might have one bin close to the issue desk, and another bin elsewhere in the warehouse.

A warehouse can store inventory owned by several organizations, including consigned inventory owned by vendors. For each part number, you can choose to set up one bin with different bin levels for each vendor or owner, or you can use a separate bin for each owner. To optimize your picking route within a serviceable store, you can assign a route order number to each bin location. The route order number can be assigned to each bin location individually, or in bulk.

Bin levels include the part number, location, owner, and the following levels:

Maximum bin level

This level is determined by the size of the bin. For example, if only three engines can fit into a bin, the maximum level for the bin is three.

Minimum bin level

This level is set to zero for most bins. If you have several bins for the same part number, setting the minimum level to a different value can help you to distribute the parts evenly across the bins at different locations within the same airport.

CAMO does not take any action when the contents of a bin fall below the minimum level. Load balancing requires manual action.

If CAMO is configured to automatically create and complete put-away transfers (if the AUTO_COMPLETE_PUTAWAY configuration parameter is true), the put-away transfers cannot be automatically completed if bin levels are not specified or if more than one bin level is specified for a part number.

After you set up a new bin level, an unscheduled cycle count is added to the list on the Cycle Count tab with the current date as the Count By Date. You can also manually schedule a cycle count.

Removing bin levels

You can remove a bin level for a part number at a bin location from the Bin Levels tab on the Location Details page or from the Bin Levels tab on the Part Details page.

When you remove a bin level:

- If there is no inventory for the part number at the bin location, the inventory count records are marked as historical (in the INV_LOC_PART_COUNT table, the HIST_BOOL column is set to '1'). In this case, the bin location will not appear in the list of inventory to count on the Cycle Count tab.
- If there is inventory for the part number at the bin location, the inventory records are not marked as historical (in the INV_LOC_PART_COUNT table, the HIST_BOOL column is set to '0') and the bin location appears in the list of inventory to count on the Cycle Count tab.

If you no longer want to count inventory for a part number at a bin location, you can manually transfer the existing inventory to another bin.

Viewing a bin's history

You can view the history of a bin location to help investigate inventory count discrepancies. The History tab on the Location Details page for a bin location shows the part number, the manufacturer, the date and time, the expected and actual quantities for inventory counts and recounts, and the user who performed the action.

The following actions are recorded on the History tab for a bin location:

- A bin level was created.
- A bin level was removed.
- An inventory count was recorded.
- A part number's next count date was updated.
- An inventory recount was requested.
- An inventory recount was recorded.
- Corrections were performed based on inventory recount results.
- A discrepancy for an inventory count was ignored.

Related tasks

Create bin locations

Create bin levels

Create bin locations

You can create bin locations to help organize and locate items stored in a warehouse.

About this task

A bin location represents the actual storage location for specific inventory. Each bin contains inventory with the same part number, but items with the same part number can be stored in more than one bin.

Steps

1. On the **Location Search** page, click **Create Bin Location**.
2. On the **Create Bin Location** page, provide the requested information and click **OK**.
3. On the **Edit Location** page, provide the requested information and click **OK**.

Related concepts

Bins and bin levels

Create bin levels

For a bin location, you can create bin levels that specify the part stored in the bin, the owner, and the minimum and maximum quantity of items that can be stored in the bin.

About this task

After you create the bin level, you can optionally schedule the next count date that is appropriate for the ABC classification of the part. If you don't set the count date, an unscheduled count with today's date for the Count By Date is listed on the Cycle Count tab. For the bin to be listed in the Cycle Count tab, the bin must have a bin level defined.

Note The following steps start with the bin location, but you can also create bin levels from the Part Details, Bin Levels tab. If you create a bin level from the Part Details, the part number is auto-filled, and you search instead for the bin location.

Steps

1. To find a bin location, do a **Location Search** with a **Location Type** of BIN. Select a bin location from the list.
2. On the bin's **Location Details** page, **Bin Levels** tab, click **Create Bin Level**.
3. On the **Create Bin Level** page, to enter the **Part No**, click to search, select a part, and click **Assign Part**.
4. (Optional) Provide following information:
   - To enter the **Owner**, click to search, select an owner, and click **Assign Owner**.
   - Maximum bin level: Enter the maximum number of items.

- Minimum bin level: Enter the minimum number of items.

5. Click **OK**.
6. (Optional) To schedule cycle counting, click **Set Next Count Date** and then click **OK**.

Related concepts

Bins and bin levels

Define the route order for a bin

You can assign a route order number to each bin location to optimize your picking route within a serviceable store.

About this task

The route order number you define will be used to sort the issue list printed in CAMO.

Steps

1. On the **Location Details** page, **Details** tab, click **Edit Location Details**.
2. On the **Edit Location** page, assign a value to the **Route Order** field and click **OK**.

When you select a work package with part requests and print the issue list, the issue list will be printed in ascending order of the defined route order. All inventory items that are assigned to locations without route orders will appear at the bottom of the issue list.

Note You can define or modify the route order of bin locations, in bulk, by exporting the route order details to a file, updating the file with new and modified route order numbers and importing the updated file to CAMO.

Related concepts

Bulk export and import of bin route order

Related tasks

Export bin route order
Import bin route order

Bulk export and import of bin route order

You can update the route order of multiple bin locations at a time, via bulk export and import.

You can export the route order for existing bin locations, from CAMO to a comma separated value (.csv) file, for analysis and updates. Once the updates are made, you can import the file to CAMO to reflect the new or modified route order.

Export Bin Route Order

You can export the bin route order for all bin locations from the Bin Route Order tab page on the Bulk Export and Import tab of your to-do list. A typical export file contains all route order details for bin locations, as defined in CAMO. Once exported, you can update the file by adding or modifying the route order.

Update Bin Route Order

You can add or modify the route order for existing bin locations. However, removing existing bin locations in the file does not result in removing them from CAMO, when imported. If you want to clear the route order of a bin location from CAMO, delete the route order value for the required bin location.

To ensure a successful import, while updating the file, you must retain the name and number of columns for recording route order data, in their exported format. You must also input only valid information, taking care to ensure the route order details being imported comply with the following criteria:

- The bin location and parent location should already exist in CAMO.
- The bin location must be assigned to the parent location in CAMO.
- The route order is a valid number.

Import Bin Route Order

You can import the route order for all bin locations on the Bin Route Order tab of the Bulk Export and Import tab of your to-do list. A typical import file contains the updated route order, for all bin locations predefined in CAMO.

File Import Statuses

When you select your import file and proceed to import, you can view the status of the import. Possible statuses are as follows:

- Queued - the import file has been uploaded or queued for uploading.
- Processing - the uploaded data will be validated and continue to either the Imported or the Errors Logged status.
- Imported - all the data in the file is valid and has been updated accordingly in CAMO.
- Errors Logged - some or all of the data in the import file is invalid, in which case only the valid data has been imported and updated.

You can view an error log with reasons for the failure of the import due to invalid data, in the event that the imported file has the Errors Logged status

Related tasks

Export bin route order

Import bin route order
Define the route order for a bin

Export bin route order

You can export the route order of all bin locations within serviceable stores from CAMO to a file, to be able to view and update them, in bulk.

Steps

1. Go to the **Bulk Export and Import** tab.
2. On the **Bin Route Order** tab, click **Export Bin Route Order**.

Note You can update the exported file with the new or modified route order, which can then be imported to CAMO. If bin locations have not been defined in CAMO, on opening the file you are informed that you do not have any available bin locations. You should create the required bin locations in CAMO before you export the bin route order.

Related concepts

Bulk export and import of bin route order

Related tasks

Define the route order for a bin
Import bin route order

Import bin route order

You can define or modify the route order of bin locations within serviceable stores in CAMO, in bulk, by importing the bin route order details from a file.

Prerequisite

- You have saved data in a .csv (comma separated value) file in the following format:

  `<bin location> <parent location> <route order>`
- You have not entered any new rows in your import file.

Steps

1. Go to the **Bulk Export and Import** tab.
2. On the **Bin Route Order** tab, click **Import Bin Route Order**.
3. On the **Import File** page, click **Choose File** and select your file to be imported.
4. On the **Import File** page, click **OK**.

Note The new or modified route order for only valid bin locations are imported. If the *Import Status* is *Errors Logged*, you can view the cause of the error in the error log that can be accessed on the **Bulk Export and Import** tab.

When you select a work package with part requests and print the issue list, the issue list is printed in ascending order of the defined route order. All inventory items that are assigned to locations without route orders appear at the bottom of the issue list.

Related concepts

Bulk export and import of bin route order

Related tasks

Define the route order for a bin
Export bin route order

Stock level management

Stock numbers

Stock numbers are used for materials management.

A stock number is a number defined by your organization and used internally to refer to a part and its alternate parts. Stock numbers are unique within the organization that defines them. Official documents and records, however, require the actual part numbers defined by the part manufacturers. When displaying and storing information, CAMO uses the stock number or the part number as required.

A stock number can be associated with more than one part number. For example, you can use one stock number for all valves, even if those valves have different part numbers and are from different manufacturers. This allows you to fill a stock requirement with valves from a variety of manufacturers. A part number cannot be associated with more than one stock number.

For supply locations, you can click a button so that CAMO calculates the value of most stock number attributes, including monthly demand, cost information, and order information. If you manually override the value of an attribute that CAMO has calculated, CAMO does not recalculate or update this value when changes are made.

You can manage stock numbers from the Stock Details page or from the Location Details page. You can check stock levels, create and issue purchase orders automatically, view stock lows and stock requests, and specify the number of specific inventory items that should be kept at each supply and warehouse location.

Related concepts

Stock availability
Stock levels and lows

Related tasks

Create stock numbers
Find stock

Create stock numbers

When creating stock, you create the stock number first and then add parts to the stock number.

About this task

CAMO automatically calculates the value of most stock number attributes, including monthly demand, cost information, and order information. If you manually override the value of an attribute that CAMO has calculated, CAMO does not recalculate or update this value when changes are made.

Steps

1. To create a stock number, on the **Stock Search** page, click **Create Stock**.
2. On the **Create Stock** page, provide the requested information. Note the following:
   - Auto Create PO: Select this option to enable CAMO to automatically create POs for this stock number when the stock low action automatically generates a purchase request.
   - Auto Issue PO: Select this option to enable CAMO to automatically issue the PO created in response to the stock low action.
   - ABC Classification: You can select a class, but the class for the stock number is not tied to auto recalculation of the ABC class for the parts in the stock number. You can select a class if it's useful to see it for the stock number.
3. Click **OK**.
4. To add parts to a stock number, on the **Stock Details** page, **Details** tab, **Assigned Parts** area, click **Assign Part** ».
5. On the **Part Search** page, enter your search criteria, and click **Search**.
6. From the search results, select a part or parts and click **Assign Part**.

To specify the quantity of the stock that should be stored at a supply location or at a warehouse location, and to select the stock low action, set the stock level.

Related concepts

Stock numbers

Find stock

You can find information about individual stock items by searching for the stock, and then clicking the link to access the Stock Details page.

About this task

You might want to do this to, for example, know which stock is obsolete or surplus so that you can remove it from the warehouse.

Steps

1. Find stock by doing one of the following:
   - On the **Stock Search** page, enter your search criteria and click **Search**.
   - To find obsolete stock, look on your to-do list, **Obsolete Inventory** tab.
   - To find surplus stock, look on your to-do list, **Surplus Stock** tab.
   - To find slow moving stock, look on your to-do list, **Slow Moving Stock** tab.
2. (Optional) To check what stock is available for a stock number at a supply location, on the **Stock Details** page, select the **Availability** tab.
3. (Optional) To check what stock is available for a stock number at a warehouse location, on the **Stock Details** page, select the **Warehouse Stock Levels** tab and review the information in the Serviceable columns (Avail, Resvd, Transfer Pend, and In Kit).

Related concepts

Stock numbers

Stock levels and lows

You can set stock levels for supply locations (airports) and for warehouses (serviceable store location types) to trigger automatic or manual replenishment of stock when a stock low is detected.

The actions that can be triggered when a stock low is detected depends on whether the location is a supply location or a warehouse:

- When stock runs low at a supply location, it must be replenished from external sources (remote supplier).
- When stock runs low at a warehouse location, it must be replenished from another warehouse defined as the supplier location (local supplier).

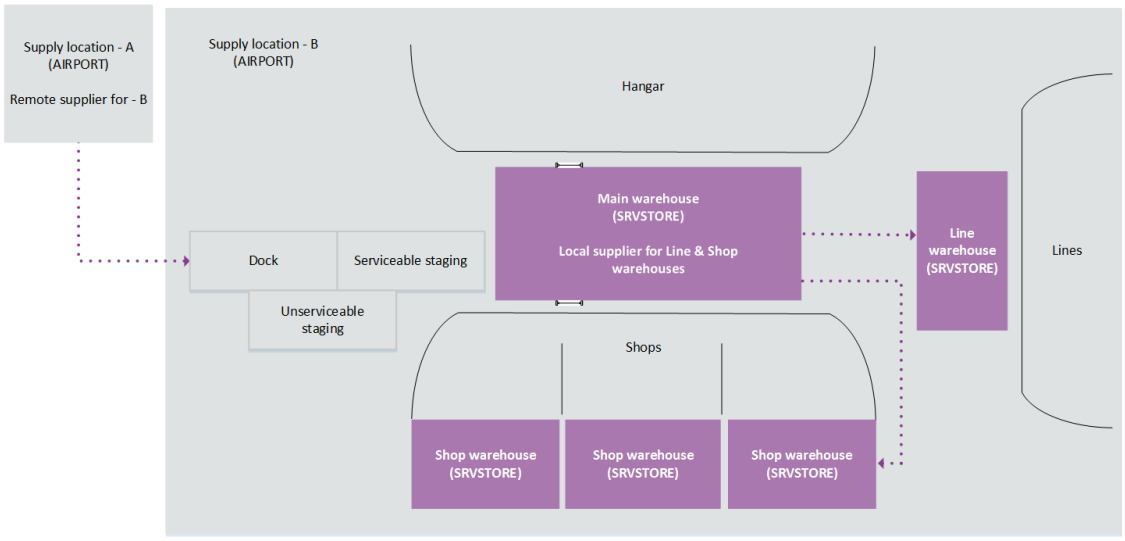

Remote and local suppliers

Supply locations

To replenish stock for a supply location or for a whole airport, you can set stock levels so that CAMO automatically generates purchase orders or shipments from outside the supply location. When you set stock levels for a supply location, you also provide information that governs the relative importance of a stock number in the overall restocking strategy for your organization.

Warehouse locations

To replenish stock for a warehouse location, you can set stock levels so that CAMO automatically generates stock distribution requests to transfer inventory from the supplier location to the warehouse to be replenished. In most cases, the main warehouse is the supplier for the line warehouse and for multiple shop warehouses.

Note In CAMO, warehouses are defined as *serviceable store* location types with a SRVSTORE location code.

Related concepts

Stock numbers

Supply location stock levels

Warehouse stock levels

Bulk export and import of stock levels

Supply location stock levels

For each stock number, you can set a stock level to specify the quantity of the stock to store at a supply location, the restock level, and the stock low action that takes place when the stock level drops below its restock level.

When you create or edit a stock level at a supply location, you specify the following information.

- Weighting Factor: of the stock number. This is a global value indicating the importance of the stock number relative to other stock numbers.
- Number of Inbound Flights: the number of inbound flights per month.
- Station Weight Factor: indicates the importance of keeping the stock at this supply location as opposed to other supply locations.
- Safety Level: the lowest level to which the stock can drop before reordering new inventory.
- Stock Low Action: the action to be taken when the stock at a supply location falls below the Restock Level.

CAMO uses the information listed above to calculate the following information:

- Allocation %: specifies the percentage of the total stock that a location must hold. If you have only one supply location for a stock number, its allocation percentage is 100%. If you have multiple supply locations, the total allocation percentage of all locations must be 100%.
- Restock Level: the quantity of stock in a supply location that triggers the stock low action.
- Max Level: the maximum stock quantity that you want to store in a supply location.

You can also set the Allocation %, the Restock Level, and the Max Level manually.

Stock lows can happen when items are issued, marked for scrap, archived, or shipped to other locations, when purchase orders are canceled, or when inventory counts are adjusted after cycle counting.

When you create or edit a stock level, you can select one of the following options to specify how CAMO responds to stock lows for that stock:

- POREQ: automatically generates a stock purchase request.
- SHIPREQ: automatically generates a shipment from the remote supplier.
- MANUAL: a purchase request is not created. The stock low is displayed on the Stock Lows tab for manual processing.

Related concepts

Stock levels and lows

Supply location stock lows

Bulk export and import of stock levels

Related tasks

Create stock levels for supply locations
Recalculate stock levels
Remove warehouse stock level
Export stock levels from supply locations
Import stock levels to supply locations

Stock availability

For a stock number, on the Stock Details page, Availability tab, you can see an overview of what stock is located at various supply locations, who owns it, the restock level, what's available, on order, in transit, awaiting inspection, in repair, etc.

You might use this information, in conjunction with viewing other tabs such as Stock Lows, to make decisions or adjust stock levels for supply locations. These quantities on the Availability tab include alternate parts assigned to the stock number. Note that there is a distinction between stock that a material planner can consider as available for planning and use purposes and stock that is financially owned by the operator.

Terms and descriptions for stock availability at supply locations

Column name	Description
Location	Quantities are shown in separate lines for each supply location that you see on the tab.
Owner	In each location, quantities that belong to different owners, such operators or vendors, are displayed on separate lines. Inventory on order or awaiting a receiving inspection is owned by a vendor, as is consignment inventory.
Restock Level	The restock level is specified when the stock level is set for the stock number. Stock low actions are triggered when the stock quantity drops below this number.
On Order	The quantity of items ordered in response to a part or stock request. The count includes purchase, consignment, and borrow order items for orders that were issued. After a shipment for an order is received, the items are counted in other columns such as Serviceable/Avail, Serviceable/Resvd, etc. Items received in INSPREQ condition are counted in Unserviceable/ Await Insp.

Column name	Description
Serviceable/Avail	The quantity of loose, unreserved, inventory items in RFI condition. This count increases as RFI items are received, inspected as serviceable etc, and decreases when items are issued, exchanged out, etc.
Serviceable/RFB	The quantity of loose, unreserved, items in Ready for Build condition (RFI, but incomplete and missing mandatory sub-components.) Only displayed if the Ready for Build feature is enabled.
Serviceable/Resvd	The quantity of loose inventory items reserved for part or stock requests.
Serviceable/Xfer	The quantity of items in ready for issue (RFI) or inspection required (INSPREQ) condition that are in transit (in a shipment) between the supply location and another location outside the supply location. This includes inventory that's being shipped after the SHIPREQ stock low action reserved and created a shipment for remote inventory, and the shipment was sent from the supplier. This column can also include quantities displayed as (PENDING:). These quantities are shown in this column, but are also counted in other columns. • In the case of items reserved remotely by the SHIPREQ stock low action, the items are picked for shipment, but the shipment isn't sent yet. The (PENDING: quantity) is displayed for the destination location, and counted in the Resvd (Reserved) column for the supplier location. • If an exchange order is created, but not yet sent, the quantity to be sent is displayed as on a separate line for the exchange location. Until the shipment is sent, the same quantity is counted in the appropriate column such as Serviceable/Avail.
Serviceable/In Kit	The quantity of items that are part of an unissued kit.
Unserviceable/U/S	The quantity of items in REPREQ condition. They are located in the supply location, require repair, and are not part of a kit.
Unserviceable/Quar	The quantity of items in quarantine condition.

Column name	Description
Unserviceable/Await Insp	The quantity of items in INSPREQ condition. Includes new items received in INSPREQ condition and items marked as INSPREQ following repair or in other work flows.
Unserviceable/In Repair	The quantity of items in INREP condition - in component work packages which are started.
Unserviceable/Condemn	The quantity of items in CONDEMN condition.
Unserviceable/Xfer	The quantity of unserviceable items that are in transit in a shipment between the supply location and another location outside the supply location.
Unserviceable/In Kit	The quantity of inventory that's in a kit and is in REPREQ, QUAR, INSPREQ, INREP, or CONDEMN condition.

Related concepts

Stock numbers

Create stock levels for supply locations

To specify the quantity of stock that should be stored at a supply location, set a stock level.

About this task

To create a stock level for a stock number at a supply location, you must provide the following information:

- Weighting Factor: of the stock number. This is a global value indicating the importance of the stock number relative to other stock numbers.
- Number of inbound flights per month.
- Station Weight Factor: indicates the importance of keeping the required stock at that supply location as opposed to other supply locations.
- Safety Level: the lowest level to which the stock can drop before reordering new inventory.
- Stock Low Action: the action to be taken when the stock at a supply location falls below the restock level.

CAMO uses the information listed above to calculate the stock's allocation percentage, restock level, restock quantity, and maximum level.

Steps

1. Find stock by doing one of the following:
   - On the **Stock Search** page, enter your search criteria and click **Search**.

- To find obsolete stock, look on your to-do list, **Obsolete Inventory** tab.
- To find surplus stock, look on your to-do list, **Surplus Stock** tab.
- To find slow moving stock, look on your to-do list, **Slow Moving Stock** tab.
- On the **Location Search** page, enter your search criteria (for airport location type) and click **Search**.

2. On the **Stock Details** or the **Location Details** page, **Stock Levels** tab, click **Create Stock Level**.
3. On the **Create Stock Level** page, provide the requested information and click **OK**.
4. On the **Stock Details** page or the **Location Details** page, **Stock Levels** tab, click **Edit Stock Levels**.
5. On the **Edit Stock Levels** page, provide the requested information and click **OK**.

> **Note** You can create and edit supply location stock levels, in bulk, by exporting stock levels from supply locations to a file, updating the file with new and modified stock levels, and importing the updated file to CAMO.

Related concepts

Supply location
Supply location stock levels
Bulk export and import of stock levels

Related tasks

Export stock levels from supply locations
Import stock levels to supply locations

Recalculate stock levels

About this task

You can recalculate the stock levels for a stock number. It is recommended that you do this periodically for each stocked item.

Steps

1. Find stock by doing one of the following:
   - On the **Stock Search** page, enter your search criteria and click **Search**.
   - To find obsolete stock, look on your to-do list, **Obsolete Inventory** tab.
   - To find surplus stock, look on your to-do list, **Surplus Stock** tab.
   - To find slow moving stock, look on your to-do list, **Slow Moving Stock** tab.

2. On the **Stock Details** page, **Stock Levels** tab, click **Edit Stock Levels**.
3. On the **Edit Stock Levels** page, adjust the details as required and click **OK**.

Related concepts

Supply location stock levels

Supply location stock lows

How CAMO detects stock lows at supply locations.

A stock low occurs when the total quantity of a stock number drops below its restock level for the supply location.

To detect stock lows for a stock number, CAMO counts the available quantity + the on order (but not shipped) quantity + in transit (in shipment) quantity. The sum of these counts is the total quantity for the purpose of detecting a stock low for a stock number at a supply location. When CAMO evaluates the quantity:

- The available and in transit quantities include items in both RFI and INSPREQ condition.
- The on order quantity includes items ordered for both part and stock requests.
- The on order quantity includes orders that are in ISSUED status.
- The total quantity includes reserved items.

When assessing quantity to determine if there's a stock low, CAMO does not distinguish between items on order and items that were received in INSPREQ condition and that require inspection before they are financially accepted into stock. Nor does it distinguish between reserved and unreserved items. These distinctions are important when planners are checking stock availability, and the numbers in these separate categories are shown on the Stock Details page, Availability tab.

Related concepts

Supply location stock levels
Stock low action SHIPREQ
Stock low action POREQ

Related tasks

Create consignment requests manually
Create purchase requests manually

Stock low action SHIPREQ

If a remote supplier is set up for the supply location and if SHIPREQ is the stock low action for a stock CAMO automatically generates a stock request and can replenish stock from the supplier.

This stock low action is for the supply location, and not for SRVSTORE (warehouse) locations.

If stock is available at the remote supplier location, CAMO attempts to reserve the quantity specified in the stock level's Reorder/Shipping quantity field.

- If the full quantity is available, CAMO reserves the stock and creates a shipment.
- If no stock is available, CAMO generates a stock request with a status of POREQ.
- If the shipping request is only partially fulfilled from the remote supplier, a stock request for the remaining quantity is generated with a status of POREQ. If the stock has the Auto Create PO option enabled, CAMO creates a purchase order for the purchase request, with the Purchase Contact set as the MXPURCHASE system user. If the stock also has the Auto Issue PO option enabled, CAMO issues the purchase order with the MXPURCHASE system user as the authorizing user.

If inventory is reserved remotely to fulfill a stock request and then the reservation is broken:

- If the stock request is for serialized parts, CAMO creates a purchase request.
- If the stock request is for batch parts, CAMO attempts to reserve inventory again from the remote supplier location. If no stock is available, CAMO creates a purchase request.

You can see the supply location's supplier on the Location Details (of the supply location) and on the Stock Details (Stock Level tab) pages.

Related concepts

Supply location stock lows

Stock low action POREQ

When a stock low at the supply location triggers the POREQ stock low action CAMO automatically generates a stock part request.

What is done with the stock part request depends on whether the stock number is configured with the Auto Create PO and Auto Issue PO options.

If the Auto Create PO and Auto Issue PO options are not selected for the stock number, then:

- The request is created with a POREQ status and is listed on the Stock Requests tab. A purchasing agent takes action to fulfill the request.

If the Auto Create PO option is selected for the stock number, then:

- The stock part request is created with an ON ORDER status.
- A purchase order is created with the MXPURCHASE system user as the Purchase Contact.
- The purchase order is listed on the Open Orders tab.

If the Auto Create PO and Auto Issue PO options are selected for the stock number, then:

- The stock part request is created with an ON ORDER status.
- A purchase order is created and issued with the MXPURCHASE system user as the Purchase Contact and authorizer of the PO.
- You can find auto-created and auto-issued orders by filtering order searches by the Purchase Contact: MXPURCHASE.

This stock low action is for the supply location, and not for SRVSTORE (warehouse) locations.

For the auto-create PO and auto-issue PO features to function correctly, the ordered part must be associated with a purchase vendor and have a vendor price. You can view this information on the Vendor Details >Parts tab > Purchase sub-tab and the Part Details >Vendors tab > Purchase sub-tab.

The auto-issue PO option requires Procurement or AeroBuy integrations.

The system user MXPURCHASE is the authorizing user for all actions related to auto-creation and auto-issue of purchase requests and purchase orders, and appears as the recording user on system-generated history notes that are created as a result of POREQ stock lows.

Note that when the stock part request is created, a purchase request is also created, but purchase requests for stock are not listed on the Purchase Requests tab. You do see that a purchase request was created if you look at the Part Request Details for a STOCK type request.

Related concepts

Supply location stock lows

Respond manually to stock lows

Create purchase requests manually

When automatic stock replenishment is not set up for a stock number, you can manually create part purchase requests for stock that is running low.

Steps

1. On your to-do list, **Stock Lows** tab, select a stock number and click **Create Purchase Request**.
2. On the **Create Purchase Request** page, provide the requested information and click **OK**.

The purchase request is displayed on the Stock Requests tab where a purchasing agent can create an order to fulfill the request.

Related concepts

Supply location stock lows

Create consignment requests manually

About this task

You can manually create part consignment requests for stock that is running low. Do this when an automatic stock renewal option has not been set up for the stock number.

After you have created a consignment request for a part, you can create a consignment order.

Steps

1. On your to-do list, **Stock Lows** tab, select a stock number and click **Create Consignment Request**.
2. On the **Create Consignment Request** page, provide the requested information and click **OK**.

Related concepts

Supply location stock lows

Warehouse stock levels

Setting warehouse stock levels enables you to specify the number of items that should be kept at each warehouse location so that CAMO takes action to maintain the specified stock levels.

For each stock number, you can set a stock level to specify the quantity of stock to store at a warehouse location. To maintain the stock levels that you set for a warehouse, CAMO requires the following information:

- *Restock Level*
- *Max Level*
- *Stock Low Action*

If the *Stock Low Action* is set to generate stock distribution requests (DISTREQ), when the quantity of inventory for a stock number drops below the *Restock Level*, stock distribution requests are automatically generated to replenish the stock to the *Max Level* (if defined) by transferring inventory from the supplier bin location to the requesting bin location. If you have not specified a *Max Level*, stock distribution requests are generated to replenish the stock to the *Restock Level*.

Note Picked stock is moved to a bin location in the requesting warehouse if a bin level is set, and/or if an inventory owner is specified. Otherwise, the picked stock will be moved to the requesting warehouse.

After you set stock levels for a warehouse, you can adjust them based on projected demand. If a warehouse serves a particular maintenance location and you know demand for a stock number will increase or decrease for an upcoming program, you can edit the stock levels to meet the demand for the duration of the program and then reset the levels.

Alternatively, for stock that you don't want replenished automatically, you can set the *Stock Low Action* to manual intervention (MANUAL). In this case stock distribution requests are not created and instead you must manually create inventory transfers to replenish the stock.

Warehouse Stock Levels tab

On the Warehouse Stock Levels tab of the Stock Details page, you can do the following for a stock number:

- Create and edit stock levels.
- Remove stock levels.
- See all stock levels that are set at various warehouse locations and who owns the inventory (if defined).
- See the availability of inventory for each stock level, such as how many serviceable items are available, reserved, have pending transfers, and are part of a kit.

Terms and descriptions on the Warehouse Stock Levels tab

Column name/field	Description
Location	The warehouse location that a stock level is set for. The warehouse must have a location type of serviceable store (SRVSTORE).
Owner	The name of the inventory owner. This setting is optional. If you provide the owner, then stock low detection and actions are for stock that's owned by the specific owner. Some vendor-owned consignment items might be stored on location. If you need to maintain quantities of inventory for the same stock number owned by different owners, you can create separate stock levels for each owner.
Supplier Location	The central warehouse that serves as the supplier for the warehouse location to be replenished. The supplier location must be within the same supply location and must also have a location type of serviceable store (SRVSTORE).
Safety Level (EA)	The lowest level to which the stock can drop. This setting is currently not used.
Restock Level (EA)	The quantity of stock that triggers the Stock Low Action to replenish the warehouse. The Restock Level must be equal to or less than the Max Level.

Column name/field	Description
Max Level (EA)	The maximum quantity of stock that you want to store in the warehouse due to constraints such as space or carrying cost. The Max Level can be 0.
Stock Low Action	The action that CAMO will take when a stock low is detected at the warehouse. A stock low is detected when the quantity of stock drops below the Restock Level. You can select: • DISTREQ: Stock distribution requests are automatically generated to transfer inventory from the supplier location to the warehouse location to be replenished. • MANUAL: Stock distribution requests are not automatically generated. If this value is selected, you must manually create inventory transfers.
Serviceable/Avail	The quantity of loose, unreserved, inventory items in RFI (ready for issue) condition that are available in the warehouse and its sub-locations, and that belong to the owner (if the owner is specified).
Serviceable/Resvd	The quantity of loose inventory items in RFI (ready for issue) condition that are reserved in the warehouse and its sub-locations, and that belong to the owner (if the owner is specified).
Serviceable/Transfer Pend	The quantity of loose, unreserved, inventory items in RFI (ready for issue) condition that have a transfer pending to the warehouse and its sub-locations, and that belong to the owner (if the owner is specified). Includes all types of transfers.
Serviceable/In Kit	The quantity of inventory items that are part of a kit in RFI (ready for issue) condition and that belong to the owner (if the owner is specified).

Related concepts

Stock levels and lows

Supplier location

Maintaining stock levels

Bulk export and import of stock levels

Related tasks

Assign a supplier to a warehouse
Set warehouse stock levels
Remove warehouse stock level
Export stock levels from warehouse locations
Import stock levels to warehouse locations

Supplier location

For each serviceable store (SRVSTORE) warehouse location, you can designate another warehouse within the supply location as a *local supplier*. Then, when warehouse stock levels are set and stock lows are detected, stock distribution requests are automatically created to transfer stock from the supplier warehouse.

You can choose one supplier for a warehouse. In most cases, a main warehouse is the supplier for other warehouses, but you can choose a different valid supplier.

A valid supplier for a given warehouse is:

- Another SRVSTORE warehouse within the same supply location.
- Not supplied by the given warehouse.
- Not part of a supplier chain that is supplied by the given warehouse.

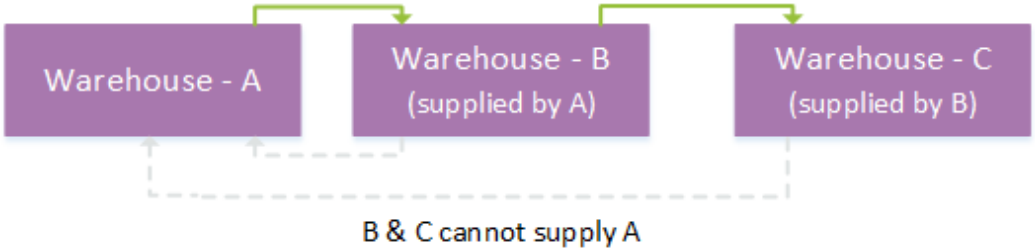

Example of valid and invalid supplier for a SRVSTORE warehouse location.

Related concepts

Warehouse stock levels

Related tasks

Assign a supplier to a warehouse

Assign a supplier to a warehouse

If you want to set warehouse stock levels that automatically generate stock distribution requests, for each serviceable store (SRVSTORE) warehouse in your supply location, assign another SRVSTORE warehouse as the *supplier location*.

About this task

When warehouse stock levels are set and stock lows are detected, stock distribution requests are automatically created to transfer stock from the local supplier warehouse to the requesting warehouse.

Steps

1. To find a SRVSTORE warehouse location, go to the **Location Search** page, enter your search criteria and click **Search**.
2. From the **Location Details** page, click the **Details** tab, and then click **Edit Location Details**.
3. On the **Edit Location** page, for the **Supplier Location** field, do one of the following:
   - Enter the SRVSTORE warehouse location code and click **OK**.
   - Click , select a SRVSTORE warehouse location, and then on the **Edit Location** page, click **OK**.

Related concepts

Warehouse stock levels
Supplier location

Set warehouse stock levels

For stock numbers that you store in one or more serviceable store (SRVSTORE) warehouse locations, you can manually set warehouse stock levels so that CAMO detects stock lows and takes the action you specify. After a stock level is created, you can edit the settings based on projected demand.

Prerequisite

If you set the Stock Low Action to DISTREQ, CAMO automatically creates stock distribution requests to transfer stock from the supplier location to the warehouse location.

- To select the DISTREQ stock low action, the warehouse must have a local supplier.

Steps

1. To find stock, go to the **Stock Search** page, enter your search criteria and click **Search**.
2. From the **Stock Details** page, click the **Warehouse Stock Levels** tab.
3. Click **Create Stock Level**.
4. On the **Create Stock Level** page, provide the required information. Note the following:

- **Location**: Select a warehouse location. The location must be a serviceable store (SRVSTORE) location type.
- **Owner**: Assign an inventory owner for the warehouse stock level if you need to maintain quantities of the same stock number that are owned by different owners.

> **Note** If you specify an inventory owner for a warehouse stock level, you cannot create another stock level with no owner for the same stock number at the same location. Similarly, if you do not specify an inventory owner for a warehouse stock level, you cannot create another stock level with an owner for the same stock number at the same location. In this case, remove the existing stock level and create a new one.

5. Click **OK**.
6. To edit warehouse stock levels, click **Edit Stock Levels**.
7. On the **Edit Warehouse Stock Levels** page, provide the required information. Note the following:
   - **Restock Level**: Enter the quantity of stock that triggers the Stock Low Action at the warehouse. The Restock Level must be equal to or less than the Max Level.
   - **Max Level**: Enter the maximum quantity of stock that you want to store in the warehouse. The Max Level can be 0.
   - **Stock Low Action**: Select the action to take when the quantity of stock in the warehouse falls below the Restock Level. Select DISTREQ to have stock distribution requests automatically generated.

   > **Note** If you set the **Stock Low Action** to MANUAL, stock distribution requests are not automatically created. In this case, you must manually create transfers as required.
8. Click **OK**.

> **Note** You can create and edit warehouse stock levels, in bulk, by exporting stock levels from warehouse locations to a file, updating the file with new and modified stock levels, and importing the updated file to CAMO.

Related concepts

Supply location
Warehouse stock levels
Bulk export and import of stock levels

Related tasks

Assign a supplier to a warehouse
Remove warehouse stock level
Export stock levels from warehouse locations
Import stock levels to warehouse locations

Remove warehouse stock level

For stock numbers that you no longer need to store in one or more serviceable store (SRVSTORE) warehouse locations, you can remove stock levels from the Stock Details page so that stock levels are not maintained anymore.

Prerequisite

- At least one stock level exists for a stock number.

Steps

1. To find stock, go to the **Stock Search** page, enter your search criteria and click **Search**.
2. From the **Stock Details** page, click the **Warehouse Stock Levels** tab.
3. Select one or multiple stock levels.
4. Click **Remove Stock Level**.

> **Note** Removing a warehouse stock level does not impact existing stock distribution requests. Any existing stock distribution requests will remain active until you choose to either complete or cancel them.

Related concepts

Warehouse stock levels
Supply location stock levels

Responding to stock lows

When a stock low is detected at a warehouse location and the Stock Low Action is set to DISTREQ, CAMO automatically generates a stock distribution request to replenish the stock or automatically adjusts the quantity of an existing stock distribution request.

A stock low occurs when the total quantity for a stock number drops below its Restock Level as a result of any of the following events:

- An inventory condition is changed. For example, inventory is quarantined, condemned or scrapped, marked as repair or inspection required, or archived.

- An item is issued.
- An inventory location is changed. For example, inventory is transferred or shipped to another location.
- The on-hand quantity is updated.
- Inventory is marked as not found.
- The stock configuration is changed. For example, an alternate part number is removed from the stock number.
- The bin quantity for a batch item is decreased.
- Inventory is assigned to a kit.

If the total quantity inventory is less than the Restock Level, then a stock low is detected and as a result the Stock Low Action is triggered. CAMO performs one of the following actions based on the Stock Low Action that you choose:

- **DISTREQ**: Stock distribution requests are automatically generated to transfer inventory from the supplier location to the warehouse location to be replenished.
- **MANUAL**: Stock distribution requests are not automatically generated. If this value is selected, you must manually create inventory transfers.

Note If no inventory owner is specified for a warehouse stock level, then the inventory owner is ignored when detecting a stock low.

Determining the restock quantity

When the stock low action is DISTREQ, stock distribution requests are automatically generated in Open status. The quantity of the request depends on how you set up the stock level:

- If you provide values for both the Restock Level and Max Level (which you might do for batch inventory), the quantity of the resulting stock distribution request is the Max Level minus the quantity counted when the stock low was detected.
- If you provide a value for only the Restock Level, then when a stock low is detected, the quantity of the resulting stock distribution request is the Restock Level minus the quantity counted when the stock low was detected.

If a stock low is detected and there is an existing stock distribution request that is open, then the quantity for that stock distribution request will be increased to maintain the specified stock level and a history note is added. If there is no existing stock distribution request that is open, then a new stock distribution request is created.

Related concepts

Maintaining stock levels
Stock distribution requests

Responding to stock highs

When a stock high is detected at a warehouse location and the Stock Low Action is set to DISTREQ, CAMO automatically reduces the quantity of open stock distribution requests to help avoid over-stocking.

If a stock distribution request is generated to replenish a stock low, but during that time inventory is moved into the warehouse and causes the availability of inventory to increase, then a stock high might occur.

Adjusting the restock quantity

When the stock low action is DISTREQ, stock distribution requests are automatically adjusted when they are in Open status. The quantity of the adjustment depends on how you set up the stock level.

If the total quantity of available inventory is more than the Max Level (or the Restock Level if the Max Level is 0) for the warehouse location, then a stock high is detected and as a result CAMO performs one of the following actions:

- If there is an existing stock distribution request that is open, then the quantity for that stock distribution request will be decreased and a history note is added.
- If the quantity is decreased to 0 or less, then the stock distribution request will be automatically canceled and history note is added.

Related concepts

Maintaining stock levels
Stock distribution requests

Maintaining stock levels

CAMO maintains stock levels for a stock number at a warehouse location based on the stock levels that you have set and the availability of stock.

CAMO calculates the total quantity for a stock number at a warehouse location as follows:

```
Total quantity = available quantity + quantity of incoming stock
distribution requests - quantity of completed stock distribution
requests
```

The following lists the details about the calculation:

- `The available quantity` includes the quantity of available items that have an inventory condition of ready for issue (RFI). This includes inventory in sub-locations of the warehouse such as bins and reserved items. Kit inventory is not included.

- `The quantity of incoming stock distribution requests` includes the quantity of stock distribution requests requested from the supplier location that are in OPEN, INPROGRESS, and PICKED status.
- `The quantity of completed stock distribution requests` includes the quantity of completed transfers for incoming stock distribution requests.

Related concepts

Warehouse stock levels
Responding to stock lows
Responding to stock highs
Stock distribution requests

Stock distribution requests

When a stock low is detected at a warehouse location that has stock levels and the Stock Low Action is set to DISTREQ, Stock distribution requests are automatically created to transfer inventory from a supplier location to a warehouse location that needs stock to be replenished.

CAMO creates separate transfers for each item that is picked for a stock distribution request.

Stock distribution requests and associated transfers have the following lifecycle:

1. When a stock distribution request is generated, the status is **Open**.
   - While the stock distribution request is Open, CAMO can adjust the needed quantity up or down if changes in stock availability or stock levels changes occur in the requesting warehouse.
   - Transfers are not yet created.
2. When a clerk in the supplier warehouse picks the first item, the status changes to **In Progress**.
   - For each item that is picked, a transfer is created with a status of **Pending**.
   - Note that transfers are per line for a stock distribution request, so it is possible for some lines to have transfers that have a status of Pending while others have a status of Complete.
3. When all items are picked for a stock distribution request, the status changes to **Picked**.
   - Transfers have a status of **Pending**.
   - Note that transfers are per line for a stock distribution request, so it is possible for some lines to have transfers that have a status of Pending while others have a status of Complete.
4. When all items are transferred from the supplier location to the requesting warehouse location and put away in their bins (physically as well as recorded in CAMO), the status changes to **Completed**.
   - The receiving clerk in the requesting warehouse can complete a stock distribution request by clicking the Complete Request button, which completes the stock distribution request and all its transfers. In this case, the status for all transfers will change to **Complete**.

- The receiving clerk in the requesting warehouse can also complete a stock distribution request by completing individual transfers line by line for each picked item. When the status for all transfers changes to Complete, the status for the stock distribution request will automatically change to Completed.

Note Picked stock is moved to a bin location in the requesting warehouse if a bin level is set, and/or if an inventory owner is specified. Otherwise, the picked stock will be moved to the requesting warehouse.

When a stock distribution request is canceled, the following occurs:

- If no items are picked for the stock distribution request (the status is Open), the status for the stock distribution request changes to Canceled.
- If some or all items are picked for the stock distribution request (the status is In Progress or Picked) and the status for the associated transfers is Pending, the status for the stock distribution request and its transfers changes to Canceled.

Note When inventory is auto-issued by the installation of a component, Maintenix triggers a stock level check. Stock distribution requests are generated for TRK and SER part numbers as well as BATCH when the Qty on Hand of part assigned to a stock code at a line location falls below the restock level defined on the Warehouse Stock Level.

Stock Distribution Requests tab

Stock distribution requests (DISTREQs) are displayed on your To Do List, Stock Distribution Requests tab. On the Stock Distribution Requests tab, you can do the following:

- Filter the stock distribution requests
- Print a pick list
- Pick items
- Complete a request
- Cancel a request

Stock distribution requests are automatically generated with the information shown in the table below.

Terms and descriptions on the Stock Distribution Requests tab

Column name/field	Description
Request ID	The ID for the stock distribution request. Click the link or copy and paste this ID in the Barcode Search to go to the **Stock Distribution Request Details** page.
Status	The status of the stock distribution request, which can be: • Open (OPEN) • In Progress (INPROGRESS) • Picked (PICKED) • Completed (COMPLETED) • Canceled (CANCELED)
Stock No	The stock number for which the stock is low. Click the link to go to the **Stock Details** page for a specific stock number.
Qty	The quantity required to be redistributed.
Where Needed	The warehouse location of type SRVSTORE where the stock distribution request is needed. Click the link to go to the **Location Details** page for a specific warehouse location.
Supplier Location	The warehouse that is the supplier location from where the inventory needs to be transferred. Click the link to go to the **Location Details** page for a specific supplier location.
Requested Date	The date and time when the stock distribution request was generated.
Owner	The name of the inventory owner for a warehouse stock level, if specified.

Column name/field	Description
Hazardous Material	Indicates whether a stock distribution request involves a part that requires special handling for hazardous materials. If that is the case, then this column shows the Hazardous Material icon . You can click the icon to see detailed information about the part and its special handling.

Related concepts

Maintaining stock levels
Responding to stock lows
Responding to stock highs
Stock distribution request pick list

Related tasks

Filter the Stock Distribution Requests tab
View stock distribution request details
Generate a pick list for stock distribution requests
Pick items for stock distribution requests
Complete stock distribution requests
Cancel stock distribution requests

Filter the Stock Distribution Requests tab

On the Stock Distribution Requests tab, to narrow down the list and focus on specific items, you can select or clear filters.

About this task

You can apply a filter and then select all the stock distribution requests to perform actions such as printing a pick list, picking items for the stock distribution requests, or canceling the stock distribution requests.

You can choose from the following filters:

Filter descriptions

Filter name	Description
Where Needed	Filters requests by warehouse (SRVSTORE) locations.
Show only HAZMAT requests	Filters requests by special handling for hazardous materials.
Show only NON HAZMAT requests	Filters requests by special handling for non-hazardous materials, which includes requests that have any other type of special handling and also includes requests without special handling.
Status	Filters requests by status (ALL, OPEN, PICKED, and INPROGRESS).

Steps

1. On your to-do list, **Stock Distribution Requests** tab, click **Options**.
2. Select or clear the **Filters** that you want and click **OK**.

Your filter choices are retained until you change them.

Related concepts

Stock distribution requests

View stock distribution request details

After a stock distribution request (DISTREQ) is created you can use the Stock Distribution Request Details page to see information about a specific stock distribution request.

About this task

On the Details tab, you can see information about the items to pick (such as alternate parts) and the items that have been already picked (such as the status of the transfers for the stock distribution request). On the History tab, you can see information about the stock distribution request's history, such as whether it was auto-generated or manually created.

Steps

View details for stock distributions requests by doing one of the following:

- On your to-do list, click the **Stock Distribution Requests** tab, in the **Request ID** column, click the link.
- In the **Barcode Search** field, scan or enter the ID for a specific stock distribution request.

Related concepts

Stock distribution requests

Stock distribution request pick list

The stock distribution request pick list is a report that shows a list of stock distribution requests, and information about the warehouse locations and the items that should be retrieved or "picked" to fulfill them.

When you generate a pick list for a stock distribution request, it contains the following information:

- The ID and the barcode for the stock distribution request.
- The bin from which to pick at the supply location and the inventory owner, if specified.
- The alternate part for the stock number and the bin location, if a bin level exists.
- The available quantity for the bin at the supply location.
- The needed quantity for the stock distribution request. For stock distribution requests with transfers that are either pending or complete, this includes the quantity that is required minus the quantity of items that have already been picked.
- Any notes that might specify special handling for hazardous materials.
- The bin at the warehouse location where the stock should be transferred and the inventory owner, if specified.

Example of a stock distribution request pick list

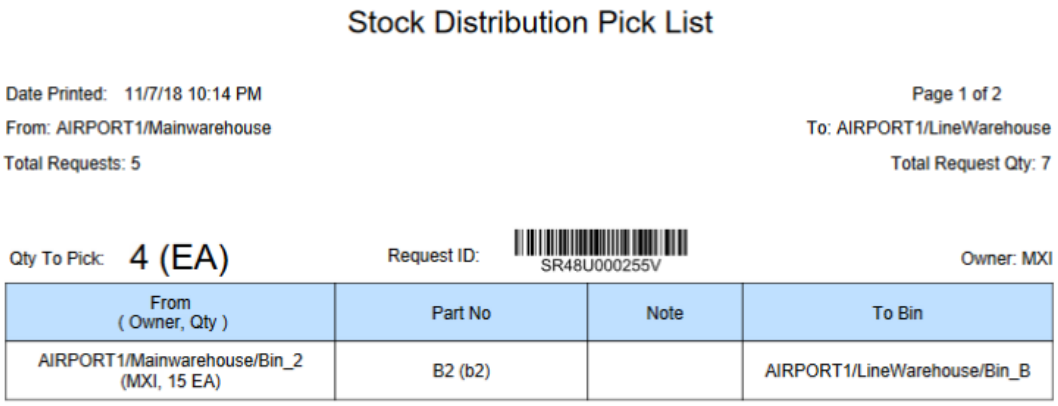

Stock Distribution Pick List

Date Printed: 11/7/18 10:14 PM
From: AIRPORT1/Mainwarehouse
Total Requests: 5

Page 1 of 2
To: AIRPORT1/LineWarehouse
Total Request Qty: 7

Qty To Pick: 4 (EA) Request ID: SR48U000255V Owner: MXI

From (Owner, Qty)	Part No	Note	To Bin
AIRPORT1/Mainwarehouse/Bin_2 (MXI, 15 EA)	B2 (b2)		AIRPORT1/LineWarehouse/Bin_B

When picking stock for a request, you can pick more than the requested quantity. If you pick more items than the available quantity for batch inventory, then the bin quantity will be updated.

Related concepts

Stock distribution requests

Related tasks

Generate a pick list for stock distribution requests
Pick items for stock distribution requests

Generate a pick list for stock distribution requests

To efficiently pick items to be transferred from a serviceable store (SRVSTORE) warehouse to another SRVSTORE warehouse, you can print a list of items to pick for stock distribution requests.

About this task

You can generate a pick list for a specific stock distribution request, as well as for multiple stock distribution requests for the same SRVSTORE warehouse location. When you generate a pick list for multiple stock distribution requests, the stock distribution requests are ordered based on the bin location's zone, then by the bin location's code (if applicable).

Note If you select multiple stock distribution requests that are for different warehouse SRVSTORE locations, then you will receive an error message as the pick list report cannot be generated.

Steps

1. View stock distribution requests by doing one of the following:

- To view a list of active stock distribution requests, go to your to-do list, **Stock Distribution Requests** tab.
- To view a specific stock distribution request, do one of the following:
  - In the **Barcode Search** field, enter the barcode for the stock distribution request, and press Enter.
  - On your to-do list, in the **Request ID** column of the **Stock Distribution Requests** tab, click a link for a stock distribution request.

2. From your to-do list, select a stock distribution request or multiple stock distribution requests.
3. Click **Print Pick List**.
4. Print the pick list report.
5. In the supplier SRVSTORE warehouse, locate the items for the stock distribution request(s) in the bin locations listed on the pick list report.

Related concepts

Stock distribution requests
Stock distribution request pick list

Pick items for stock distribution requests

To fulfill a stock distribution request (DISTREQ) once it is created, you must pick items from the SRVSTORE warehouse bin locations that are listed on the pick list and then record the picked items in CAMO using the Pick Items for Stock Distribution Request page.

About this task

You can pick items for a specific stock distribution request, as well as for multiple stock distribution requests. On the **Pick Items for Stock Distribution Request** page:

- If you do not select any stock distribution requests, you must scan the **Request ID** for a stock distribution request or enter the number in the **Request** area.
- If you select a specific stock distribution request or if you select multiple stock distribution requests, in the **Request** area, the **Request ID** field is automatically populated based on the information for the first stock distribution request that you have selected from the **Stock Distribution Request Details** page.

If you use a programmed scanner, the cursor automatically moves from these fields to the next field in this order:

- Request ID
- Barcode
- Pick Qty (for batch inventory)
- OK
- OK and Repeat

Steps

1. From either your to-do list or the **Stock Distribution Request Details** page, select one or more stock distribution request(s) and click **Pick Items**.
   - To select all stock distribution requests, click **Select All**.
   - To deselect all stock distribution requests, click **Deselect All**.
2. On the **Pick Items For Stock Distribution Request** page, in the **Inventory** area, do one of the following:
   - Scan the barcode of the item or enter the barcode number in the **Barcode** field.
   - Enter the part number in the **OEM Part No** field and the serial number or batch number in the **Serial No / Batch No** field, and then click **Add Part**.

   An error displays if you pick an item that has any of the following conditions:
   - The part number is not assigned to the stock number.
   - The inventory condition is not Ready for Issue (RFI).
   - The inventory location is not a sub-location of the same supply location for batch parts.
   - The inventory barcode is not valid.
   - The part number and serial number/batch number combination are not valid.
   - The inventory is part of a kit.
3. If there are any errors listed in the **Errors / Warnings** field, click **Remove Part** and/or correct the errors.
4. For batch parts, in the **Pick Qty** column, enter the pick quantity and press **Enter**.
   A warning displays if you pick more items than the needed quantity or if you pick more items than the available quantity. If you pick less items than the needed quantity, then you will be prompted to add another part as the cursor will automatically go to the **Barcode** field in the **Inventory** area. You then can choose to add another part to fulfill the needed quantity or click **OK**.
5. Do one of the following:
   - If you want to continue to pick for the next stock distribution request, scan another barcode or click **OK and Repeat**, and repeat steps 2 to 5.
   - If you are done picking items for stock distribution requests, click **OK**.
   - If you do not want to pick the selected items, click **Cancel**.

   > **CAUTION** If you choose to cancel, the items that you have picked will be lost and no transfers will be generated.

Picked items are listed on the **Stock Distribution Request Details** page, **Details** tab, in the **Picked Items** area.

Related concepts

Stock distribution requests
Stock distribution request pick list

Complete stock distribution requests

After the picked items have been received from the supplier SRVSTORE warehouse and put away in their corresponding bins at the requesting SRVSTORE warehouse location, you must complete stock distribution requests and their associated transfers in CAMO to ensure that the available quantities are updated.

About this task

You can complete a stock distribution request:

- If the status is PICKED (all required items are picked).
- If the status is INPROGRESS or OPEN (either items are partially picked or no items are picked for the requests).

> **Note** If the status of the stock distribution request is OPEN (no items have been picked), you can also cancel the stock distribution request instead.

Steps

1. View stock distribution requests by doing one of the following:
   - To view a list of active stock distribution requests, go to your to-do list, **Stock Distribution Requests** tab.
   - To view a specific stock distribution request, do one of the following:
     - In the **Barcode Search** field, enter the barcode for the stock distribution request, and press Enter.
     - On your to-do list, in the **Request ID** column of the **Stock Distribution Requests** tab, click a link for a stock distribution request.
2. From your to-do list, select one or more stock distribution requests.
3. From either your to-do list or the **Stock Distribution Request Details** page, click **Complete Request**.

> **Important** If you complete a stock distribution request that has outstanding items to pick (request is OPEN or INPROGRESS), a warning message will appear. In this case, if you still want to complete the request, make sure that there is enough inventory at the warehouse SRVSTORE location to maintain the warehouse stock levels.

4. If prompted, click one of the following:
   - If you want to complete the stock distribution request, click **YES**.
   - If you want to continue to pick items for this stock distribution request, click **NO**.

After a stock distribution request and the associated transfers are complete, the following occurs:

- The inventory changes from the supplier location (or the location from where the inventory is picked) to the SRVSTORE warehouse location.
- The status for the stock distribution request changes to COMPLETED and the status for the associated transfers changes to COMPLETE.
- The stock distribution request is removed from your to-do list, **Stock Distribution Requests** tab.

Related concepts

Stock distribution requests

Cancel stock distribution requests

You can cancel a stock distribution request once you have determined it is no longer needed.

About this task

You can cancel a stock distribution request:

- If the status is OPEN (no items are picked).
- If the status is PICKED or INPROGRESS (all required items are picked or items are partially picked) and the status for associated transfers is PENDING. In this case, you should return the picked items for those requests to their bin locations in the supplier SRVSTORE warehouse (if applicable).

> **Note** You cannot cancel a stock distribution request that has a status of PICKED or INPROGRESS if there is at least one transfer that has a status of COMPLETE. In this case, you should complete the stock distribution request instead.

Steps

1. View stock distribution requests by doing one of the following:
   - To view a list of active stock distribution requests, go to your to-do list, **Stock Distribution Requests** tab.
   - To view a specific stock distribution request, do one of the following:
     - In the **Barcode Search** field, enter the barcode for the stock distribution request, and press Enter.

- On your to-do list, in the **Request ID** column of the **Stock Distribution Requests** tab, click a link for a stock distribution request.

2. From your to-do list, select one or more stock distribution requests.
3. From either your to-do list or the **Stock Distribution Request Details** page, click **Cancel Request**.

> **Important** If you cancel a stock distribution request that has pending transfers, a warning message will appear. In this case, if you still want to cancel the request, return the picked items to their bin locations in the supplier warehouse (if applicable).

4. If prompted, click one of the following:
   - If you want to complete the stock distribution request, click **YES** and return the picked items to their bin locations in the supplier warehouse (if applicable).
   - If you want to continue to pick items for this stock distribution request, click **NO**.

After a stock distribution request and the associated transfers are canceled, the following occurs:

- The inventory remains at the supplier location (or the location from where the inventory is picked).
- The status for the stock distribution request and the associated transfers changes to CANCELED.
- The stock distribution request is removed from your to-do list, **Stock Distribution Requests** tab.

Related concepts

Stock distribution requests

Bulk export and import of stock levels

You can update mass quantities of stock levels, in supply and warehouse locations, via bulk export and import.

You can export stock levels for predefined stocks in supply and warehouse locations, from CAMO to comma separated value (.csv) files, for analysis and updates. Once the updates are made, you can import the files to CAMO to reflect the new or modified stock levels.

Export Stock Levels

You can export stock levels for all supply and warehouse locations from the Stock Levels tab page on the Bulk Export and Import tab of your to-do list. A typical export file contains all stock levels for stock codes for either all supply or warehouse locations, as defined in CAMO. Once exported, you can update the file with new or modified stock levels.

Update Stock Levels

You can create and edit stock levels for existing stocks in supply and warehouse locations. However, removing existing stock levels in the file does not result in removing them from CAMO, when imported.

To ensure a successful import, while updating the file, you must retain the name and number of columns for recording stock level data, in their exported format. You must also input only valid information, taking care to ensure the stock levels being imported comply with the following criteria:

- The stock code, stock level location and owner for new or modified stock levels should already exist in CAMO.
- The stock level location for warehouse stock levels must be a valid warehouse location of the serviceable stores location type, and must be marked as a supply location for supply location stock levels.
- The safety level must be less than the restock level.
- The restock level must be less than the max level.
- The owner for stock levels, for the same stock code and location, must be different. Similarly, if a stock level has no owner, in the case with warehouse stock levels, a stock level for the same stock code and location with a specific owner cannot exist. Additionally in the case of the supply location stock levels, the stock level must be defined with an owner.
- The stock level action should be set to DISTREQ or MANUAL for warehouse location stock levels and POREQ, SHIPREQ or MANUAL for supply location stock levels. A supplier location should be predefined in CAMO for the location of stock levels when the stock level action is set to DISTREQ or SHIPREQ. Additionally, for supply location stock levels with the stock low action set to SHIPREQ, the reorder/shipping quantity must be specified.

Note A stock level for a stock code that has duplicate records should be created or edited directly in CAMO.

Import Stock Levels

You can import stock levels for all supply and warehouse locations on the Stock Levels tab of the Bulk Export and Import tab of your to-do list. A typical import file will contain updated stock levels, for stock codes for either all supply or warehouse locations predefined in CAMO. On import, stock lows for valid stock levels with stock low actions of DISTREQ, SHIPREQ and POREQ can be set up to automatically trigger the corresponding stock low actions by enabling the CHECK_WAREHOUSE_LOC_STOCK_LEVELS_ON_IMPORT configuration parameter for warehouse supply location stock levels and CHECK_SUP_LOC_STOCK_LEVELS_ON_IMPORT configuration parameter for supply location stock levels.

File Import Statuses

When you select your import file and proceed to import, you can view the status of the import. Possible statuses are as follows:

- Queued - the import file has been uploaded or queued for uploading.
- Processing - the uploaded data will be validated and continue to either the Imported or the Errors Logged status.
- Imported - all the data in the file is valid and has been updated accordingly in CAMO.
- Errors Logged - some or all of the data in the import file is invalid, in which case only the valid data has been imported and updated.

You can view an error log with reasons for the failure of the import due to invalid data, in the event that the imported file has the Errors Logged status

Related concepts

Stock levels and lows
Warehouse stock levels
Supply location stock levels

Related tasks

Export stock levels from supply locations
Import stock levels to supply locations
Export stock levels from warehouse locations
Import stock levels to warehouse locations

Export stock levels from supply locations

You can export stock levels for all supply location stocks from CAMO to a file, to be able to view and update them, in bulk.

Steps

1. Go to the **Bulk Export and Import** tab.
2. On the **Stock Levels** tab, click **Export From Supply Locations**.

Note You can update the exported file with new or modified stock levels, ready to be imported to CAMO. If supply location stocks or stock levels do not exist in CAMO, on opening the file you are informed that stock levels are not available for any supply location. Updates to the exported file, must be compatible with stock level data in CAMO to ensure a successful import.

Related concepts

Supply location stock levels
Bulk export and import of stock levels

Related tasks

Import stock levels to warehouse locations

Import stock levels to supply locations

You can create and modify stock levels, in bulk, for predefined supply location stocks, by importing updated stock levels from a file.

Prerequisite

- You have saved data in a .csv (comma separated value) file in the following format:

  ```
  <stock code> <stock level location> <owner> <stock code weight> <#
  of inbound flights> <station weight factor> <allocation (%)> <safety
  level> <restock level> <max level> <reorder/shipping quantity> <stock
  low action>
  ```
- You have not entered any empty rows in your import file.

Steps

1. Go to the **Bulk Export and Import** tab.
2. On the **Stock Levels** tab, click **Import to Supply Locations**.
3. On the **Import File** page, click **Choose File** and select your file to be imported.
4. On the **Import File** page, click **OK**.

> **Note** If the *Import Status* is *Errors Logged*, you can view the cause of the error in the error log that can be accessed on the **Bulk Export and Import** tab.

Related concepts

Supply location stock levels
Bulk export and import of stock levels

Export stock levels from warehouse locations

You can export stock levels for all warehouse location stocks from CAMO to a file, to be able to view and update them, in bulk.

Steps

1. Go to the **Bulk Export and Import** tab.

2. On the **Stock Levels** tab, click **Export From Warehouse Locations**.

Note You can update the exported file, with new or modified stock levels, ready to be imported to CAMO. If warehouse stocks or stock levels do not exist in CAMO, on opening the file, you are informed that stock levels are not available for any warehouse location. Updates to the exported file must be compatible with stock level data in CAMO to ensure a successful import.

Related concepts

Warehouse stock levels
Bulk export and import of stock levels

Related tasks

Import stock levels to warehouse locations

Import stock levels to warehouse locations

You can create and modify stock levels, in bulk, for predefined warehouse location stocks, by importing updated stock levels from a file.

Prerequisite

- You have saved data in a .csv (comma separated value) file in the following format:

  `<stock code> <stock level location> <owner> <safety level> <restock level> <max level> <stock low action>`
- You have not entered any empty rows in the import file.

Steps

1. Go to the **Bulk Export and Import** tab.
2. On the **Stock Levels** tab, click **Import To Warehouse Locations**.
3. On the **Import File** page, click **Choose File**, and select your file to be imported.
4. On the **Import File** page, click **OK**.

Note If the *Import Status* is *Errors Logged*, you can view the cause of the error in an error log that can be accessed on the **Bulk Export and Import** tab.

Related concepts

Warehouse stock levels
Bulk export and import of stock levels

Related tasks

Export stock levels from warehouse locations
Export stock levels from supply locations

Kits

Kits are comprised of multiple items such as aircraft parts, consumables, and tools that are used together to carry out a specific task. Kit inventory is created in a way similar to other inventory items; however, certain activities apply only to kits. These include:

- Assembling a kit from inventory in stock.
- Adding missing items to a kit.
- Removing items that do not belong in a kit.
- Identifying incomplete kits.
- Identifying over-complete kits.

To perform any of these activities on a kit, the kit definition must be complete, and the inventory item for the kit must exist in CAMO. A kit definition is complete if the kit has a part number, and if the part numbers and quantity of the items that make up the kit have been specified.

After assembling a kit, you can seal it to prevent any further changes. If a kit is sealed, its Inventory Details page displays a banner to highlight this fact.

Add parts to kits

About this task

After a kit part number is created in CAMO, usually by your engineering department, you can add items to the kit, and specify the number of each item required. These items can include parts, tools, and consumables.

Steps

1. On the **Part Details** page, **Kit Contents** tab, click **Add Content** to Kit.
2. On the **Add Content To Kit** page, provide your search criteria and click **Search**.
3. From the search results:
   - Select the parts you want to add to the kit.
   - In the **Qty** column, enter the quantity for each part.
   - In the **Alternate Part List** column, if several alternate part numbers are listed, select the ones you want to add to the kit.
   - Click **Assign Selected Parts to Kit**.

Create kit inventory

After a kit part definition is defined, you can create actual kit inventory. Based on the kit part request number or the kit part number, you create a kit inventory item in CAMO.

About this task

Depending on your role, your starting point for this task can vary.

Steps

1. Do one of the following:
   - On your **To Do List Open Part Request** tab, click the **Create Kit Inventory For Request** button.

     Note Part requests for work packages show on this tab.

   - On the kit **Part Request Details** or kit **Part Details** page, click **Create Kit Inventory**.

     Note To see the button on the Part Request Details page, the Part Request status must be OPEN.

2. On the **Create Inventory** page, provide the requested information and click **OK**.

   Tip You can search for part numbers, locations, owners, dates, and credit accounts by clicking **Search** . You can generate a serial number by clicking **Generate Serial Number** .

3. On the **Edit Inventory** page, enter the requested information, and click:
   - Next to move to the next editing page.
   - Apply to save your changes and continue working.
   - Previous to return to the previous editing page.
   - Finish to save your changes and return to the **Inventory Details** page.
   - Cancel to discard your changes and return to the **Inventory Details** page.

On the kit Inventory Details page, the status of the kit is INCOMPLETE and the kit is listed on the Incomplete Kits tab on the Storeroom Clerk or Material Controller To Do List. The kit can now be assembled. See *Assemble kits*.

Assemble kits

To assemble kits from local supply, storeroom clerks pick the inventory items that are required to complete kits. Until the kit is complete, it is listed on the Incomplete Kits tab.

Prerequisite

Before you can pick items for a kit, the kit as an inventory item must exist in CAMO.

Steps

1. Do one of the following:
   - On your **To Do List** page, **Incomplete Kits** tab, select the check box for a kit and click **Pick Items For Kit**.
   - On the kit **Inventory Details** page, **Kits Contents** tab, click **Pick Items for Kit**.
2. On the **Pick Items For Kit** page, provide the requested information and click **Add Part**.
3. On the **Picked Items** tab, in the **Qty** column, enter the part quantity and click **OK**.
   Picked items are now listed on the **Kit Contents** tab, **Picked Items** area.

   The **Missing Contents** area lists the remaining items that are required to complete the kit.

Related tasks

Reserve kit inventory

Edit kit definitions

About this task

After you have completed a kit definition by adding parts to the kit number, you can edit the kit contents, or remove content from a kit.

Steps

1. On the **Part Details** page, **Kit Contents** tab, click **Edit Kit Contents**.
2. On the **Edit Kit Contents** page, adjust the following information as needed:
   - **Qty**: The required quantity of the item.
   - **Value Pct**: The percentage of the total kit contents that the item should comprise. You can also click Accept Suggested Value Pct to use the value percentage breakdown suggested by CAMO.
   - **Valid Alternates**: Clear or select the check box to the left of each valid alternate item to remove or add the item.
3. When the **Total Value** is 100%, click **OK**.
4. On the **Part Details** page, **Kit Contents** tab, click **Edit Kit Contents**.
5. On the **Edit Kit Contents** page, do the following:
   - On the line of the part group to remove, set the **Value Pct** value to 0 (zero).

- Adjust the **Value Pct** of the content lines that remain in the kit so that the **Total Value** is 100 percent.
- Click **Apply** to save your changes.

6. Do one of the following:
   - On the **Edit Kit Contents** page, select the part group, and click **Remove Part Group**.
   - On the **Part Details** page, **Kit Contents** tab, select the part group, and click **Remove Content from Kit**.

Turn in kits and kit contents

If a kit was issued, but not used and is returned to the warehouse, you can turn it in.

About this task

Kits, as opposed to kit contents, are not repairable, so CAMO does not create expected turn-ins for them. You can manually create a turn-in for a kit. For each repairable item inside the kit, CAMO creates an expected turn-in when the kit is issued.

When turning in a complete kit in RFI condition, you can turn-in the whole kit or for each line of kit contents, you can specifiy the turn-in quantity.

When turning in a kit that contains a mix of serviceable and unserviceable repairable items, instead of turning in the kit and all its contents at once, you can select all the RFI kit contents for turn in. After you turn in the RFI items, the kit contents that you don't select are removed from the kit and remain on the Turn In tab. You complete these turn-ins, one item at a time, and select a REPREQ condition.

Steps

1. On your to-do list's **Turn In** tab, select an inventory item and click **Turn In**.
2. On the **Turn In** page, provide the requested information and click **OK**.

Counting inventory

You can perform counts of on-hand inventory to ensure that inventory records in CAMO are accurate.

Counting inventory is important to ensure that the inventory records match the physical inventory that you actually have in your warehouse or storage facility, and to resolve any discrepancies so that the risk of going out-of-stock is minimized.

Note You can count inventory for warehouse locations (including sub-locations) that are serviceable and unserviceable store location types.

After the inventory count results are recorded, you can see whether there are any differences (discrepancies) between the actual quantities and the quantities that are expected based on the current inventory records. After you have analyzed your count results, you can recount inventory items as requested.

When counting inventory, the following tasks are involved:

1. Counting (can be performed on a mobile scanning device)
2. Reviewing discrepancies
3. Recounting for discrepancies (can be performed on a mobile scanning device)
4. Resolving discrepancies

You can perform the following type of inventory counts:

Cycle counts

A cycle count is typically a scheduled count based on a part's ABC classification, where the system automatically calculates the next count date using the last count date and the count interval of the part's ABC classification.

The cycle count is scheduled after the first count is performed. Once the first count is recorded in the system, the counting cycle is initiated and scheduled based on the part's last count date.

Ad hoc counts

An ad hoc count is an unscheduled inventory count for an aisle or a bin location.

Recounts

A recount is an inventory count that is requested for a specific part number at a bin location to help resolve a difference in quantity.

Recounts are applicable to cycle counts and ad hoc counts.

Expected inventory

When counting inventory, you can expect specific part numbers for a bin location if there are bin levels or inventory assigned.

Expected and unexpected inventory

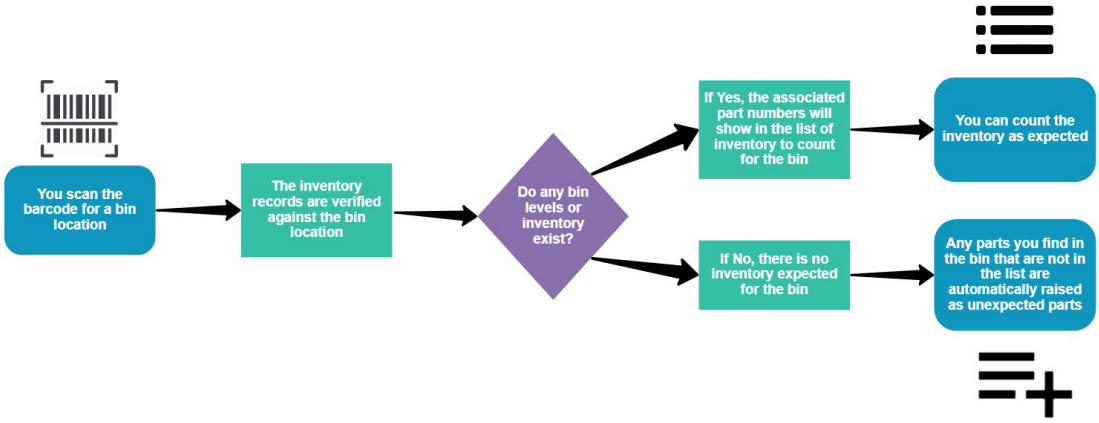

For each inventory item expected to be stored in a bin, you can see the part number, the manufacturer, the unit of measure, and an input field for the count. By default, the input field shows a count of 0.

To optimize the counting process, the list of bins with inventory to count is ordered as follow:

- By next count date (for cycle counts)
- Alphanumerically by location code for the bin's parent location
- By bin route order, if defined
- Alphanumerically by bin location code

Note Kits are counted even if their contents are incomplete.

Related concepts

Ad hoc counting
Cycle counting
Recounting for discrepancies

Using a mobile device for inventory counts

You can use a mobile scanning device to perform inventory counts, including ad hoc counts, cycle counts, and recounts.

When counting serialized (SER), tracked (TRK), kit (KIT), and assembly (ASSY) inventory, you can scan the barcode once for each part to increase the count. If you scan the same barcode twice for a part, only the first scan is recorded to avoid a duplicate count.

When counting batch (BATCH) inventory, you can scan the barcode multiple times for to increase the count for a part. You can also scan the barcode for a part once and then manually increase the count for the total number of parts. For example, if there are ten batch parts, you can scan a

part ten times or you can scan a part once and then manually input the quantity for the number of parts.

Counting inventory that is in a different location

While counting inventory, you might scan inventory that is expected for the bin (the part number shows in the list), but its inventory location is different than the bin location. This could occur if the inventory was received at the dock and put-away in the bin, but the put-away was not recorded.

If records show that an inventory item should be in a different location, you can still record a count. In this case, (if applicable) a transfer will be created (and completed) to move the inventory to the bin location, which automatically resolves the discrepancy.

If there is a pending transfer to the bin location, it will be completed. Similarly, if there is a pending transfer to a different location, it will be canceled and a new transfer will be created (and completed) for the bin location.

Before inventory can be transferred, it must be:

- Ready for issue (RFI)
- In the same supply location
- Not issued
- Not part of a kit

If the transfer cannot be created, then the count will be increased for the part in the current location and a discrepancy is raised.

Recording an unexpected part for the bin location

An unexpected part is a part number that does not have any bin levels or inventory for a bin location. Unexpected parts do not appear in the list of parts to count.

When you scan inventory for an unexpected part you can add the part to the list of parts to count for the bin location, which will raise a discrepancy. You can also manually add an unexpected part if no inventory records exist in the system for the barcode that you scan.

> **Note** Bin levels are not automatically created for unexpected parts.

Related tasks

Record an ad hoc count
Record a cycle count

Record an unexpected part found

If you find an unexpected part in a bin while counting inventory, you can manually add the part number to the bin location and record a count for it.

About this task

An unexpected part is a part number that does not have any bin levels or inventory for a bin location.

> **Note** Bin levels are not automatically created for unexpected parts.

Steps

1. On either the **Ad Hoc Count** tab or the **Cycle Count** tab, click ≡+.
2. In the **Add Unexpected Part** window, enter the barcode or the part number.
3. If the part number exists in the system with more than one manufacturer, select the applicable manufacturer.
4. Click **Add Part**.

   The part is added to the bottom of list of parts to count for the bin.

What's next

Enter the inventory count for the part number. For more information, see *Record an ad hoc inventory count* or *Record a cycle count*.

Related tasks

Record a cycle count
Record an ad hoc count

Cycle counting

A cycle count is a scheduled inventory count based on a part's ABC classification.

To ensure that the physical count matches the inventory records in CAMO, you can use a mobile scanning device to record a cycle count for inventory stored in bins at regular intervals. Cycle counting is important to ensure that parts are available when needed for maintenance.

Scheduling the count

When part numbers are created, an ABC classification is selected. The ABC classification (or ABC class) determines how often inventory with that part number is counted.

When you create a new bin level to track the quantity of inventory at a bin location or when you create inventory for a part number at a bin location, the count for that bin is unscheduled and

has the current date as the count due date. After you perform an initial count, the last count date is recorded and the next count date is scheduled based on the interval of the part's ABC classification.

Note Each part number stored in a bin location has its own next count date. However, the list of bins on the Cycle Count tab is ordered based on the earliest Next Count Date for the part numbers at the bin location.

You can also manually schedule the Next Count Date from the Bin Levels tab. This allows you to manage the cycle count schedule and make adjustments as required.

Scheduled (and unscheduled) cycle counts are listed on the Cycle Count tab with the bin location code, the part number, the manufacturer, and the unit of measure. By default, the Cycle Count tab shows cycle counts that are due for the current date.

A cycle count is overdue if the next count date is before the current date for at least one part number stored the bin location. The bin location code appears red for cycle counts that are overdue.

Submitting the count

If a there is a discrepancy between the physical count and the record in CAMO, the count results are listed on the Cycle Count Discrepancies tab.

Related concepts

Counting inventory
ABC classification

Related tasks

Record a cycle count
Create bin levels

ABC classification

The ABC classification of a part determines the part's count cycle. The ABC Classification is selected when part numbers are created in CAMO and if enabled, CAMO can reassess the classification.

The ABC classification differentiates between high-cost and low-cost items. You count your expensive, A class items more often. By default, the parts that make up 80% of the total dollar value of your stock are A class, and these are counted every three months.

ABC class defaults

ABC Classification	Percentage of total stock value in $	Counting interval
A - most expensive	80%	Every three months
B	15%	Every six months
C	4%	Every twelve months
D - least expensive	1%	Every twelve month

Administrators can configure the counting interval for each class and the percentage of total stock value assigned to each class. For more information, see the CAMO Administration Guide.

Stock numbers can also have an ABC classification, but this attribute of the stock is for information purposes only. When parts are created, if at the same time, the Create Stock No check box is selected, the ABC classification for the part number is copied to the stock number.

Autocalculation of the ABC class

When you create a part number, you assign it an ABC class. If the Auto Calculate ABC Class check box is selected for the part number (and if the MX_CORE_ABCRECALCULATION job is enabled), CAMO recalculates the ABC class periodically based on historical information. The default frequency for this recalculation is once a month, and is configurable.

To determine the ABC class, CAMO uses the value percent thresholds defined in the REF_ABC_CLASS table, and performs the following calculations:

1. CAMO calculates the total value for all inventory required for the month.
   a. CAMO calculates the monthly demand for each part by counting the number of ISSUE transfers for that part within the past year and dividing the sum by 12 months.
   b. The total value per part is calculated by multiplying the average unit price by the monthly demand for that part.
2. Starting from the lowest total value, CAMO adds the total values for part numbers, until the threshold for Class D is reached, and then it assigns the ABC class of D to all parts included in the total value summation so far.
3. CAMO continues to add the total values, until the threshold for Class C is reached, and then it assigns the ABC class of C to all parts that were included in the total value summation, after the threshold for Class C had been reached.

4. CAMO continues to add the total values, until the threshold for Class B is reached, and then it assigns the ABC class of B to all parts that were included in the total value summation, after the threshold for Class B had been reached.
5. CAMO assigns the ABC class of A to the remaining parts.

The MX_CORE_ABCRECALCULATION job updates the Next Count Date for all part numbers that change their class as a result of ABC recalculation. The new count date is set as follows:

- If there is no previous count date (Last Count Date) the job verifies whether a Next Count Date was set for a bin level.
  - If the Next Count Date is set and is within the interval of the ABC class, then the Next Count Date is left as is.
  - If the Next Count Date is set but is not within the interval of the ABC class, then the Next Count Date is reset to the current date and interval of the ABC class is added.
  - If the Next Count Date is not set it will remain empty until a count is recorded.
- If there is a previous count date (Last Count Date) the count interval of the new ABC class is added to the recorded date.

To see whether the job to calculate the ABC class is active or to see information about the calculations, you can click the ℹ info button on the Cycle Count tab.

Next count date

In addition to the updates made by the MX_CORE_ABCRECALCULATION job, the Next Count Date for a part number at a bin location is also updated when:

- A bin level is created.
- Inventory is created.
- A transfer is completed.
- A put away is completed.

Related concepts

Cycle counting

Tracking financial information for inventory

Record a cycle count

You can record a cycle count to ensure accurate inventory records for parts that have scheduled inventory counts.

About this task

You can use a mobile device to rapidly scan the barcode for inventory stored in bins that are sub-locations of serviceable and unserviceable stores. When you are finished counting, you can review the quantities for each part number on the Cycle Count tab, and then submit the count.

To see whether the job to calculate the ABC class is active or to see information about the calculations, you can click the info button on the Cycle Count tab.

If you find an unexpected part in a bin while counting inventory, you can manually record it as an unexpected part.

Important You must click **Submit** to add the part number and save the count for the unexpected part. If you do not click **Submit**, the information that you enter will be lost.

Steps

1. On your to-do list, click **Inventory Count**.
2. Go to the **Cycle Count** tab.
3. (Optional) If you want to filter the list of inventory to count, click the filter, select the applicable filters, and then click **OK**. You can apply the following filters:
   - **Count Due:** Shows inventory based on the count due date that you select from the drop-down calendar.
   - **Bin Code:** Shows inventory based on the code for a bin location.
   - **Storage Location Type:** Shows inventory based on the storage location type.
   - **ABC Classification:** Shows inventory based on the ABC class.
   - **Part Use:** Shows inventory based on the part use.
4. To enter a count, do one of the following for each part number:
   - Scan the inventory barcode.
   - Manually enter the count by typing a number in the field or use the **-** and **+** buttons.

   Tip If you want to defer the count for a bin location, click **x** on the right of the bin location code to remove it from the list. The bin location will re-appear when you refresh the page or return to the tab.
5. Click **Submit Count**.

If there is a discrepancy between the physical count results and the records in the system or if you add an unexpected part and submit the count, a discrepancy is listed on the **Cycle Count Discrepancies** tab for action.

Related concepts

Using a mobile device for inventory counts
Cycle counting

Related tasks

Record an unexpected part found

Load basic inventory count results from a file

After you count or recount inventory and record the bin location code, part number, quantity, and count date in a file, you load the cycle count results from the file into CAMO.

Prerequisite

- Data is saved in a spreadsheet .csv (comma separated value) or .txt file in the following format:

  `<bin location code> <part number> <quantity> <count date>`
- The file is saved on the computer on which you use CAMO.

Steps

1. On your **Storeroom To Do List**, click the **Cycle Count** tab, then click **Load Cycle Count Results**.
2. On the **Load Cycle Count Results** page, click **Choose File**, and select the spreadsheet file on your computer.
3. On the **Load Cycle Count Results** page, click **OK**.

Load detailed inventory counting results from a file

After you count or recount inventory and record the sequence number, bin location code, part number, serial or batch number, quantity, and count date in a file, you load the cycle count results from the file into CAMO.

Prerequisite

- Data is saved in a spreadsheet .csv (comma separated value) or .txt file in the following format:

  `<sequence number> <bin location code> <part number> <serial or batch number> <quantity> <count date>`
- For serialized inventory, the quantity for a row is one. For batch inventory, the quantity for a row is the number of items in the batch.
- The file is saved on the computer on which you use CAMO.

Steps

1. On your **Storeroom To Do List**, click the **Cycle Count** tab, then click **Load Full Count From File**.
2. On the **Load Full Count Results** page, click **Choose File**, and select the spreadsheet file on your computer.
3. On the **Load Full Count Results** page, click **OK**.

Ad hoc counting

An ad hoc count is an unscheduled inventory count based on a warehouse location.

To ensure accurate inventory records for parts in CAMO, you can use a mobile device to record an ad hoc count for inventory stored in bins.

Starting the count

To record an ad hoc inventory count, you must first provide the code for the location that you want to count on the Ad Hoc Count page. For example, you can provide the location code for a serviceable store to see all its bin locations or you can provide the location code for a specific bin. To do so, you can scan the barcode for the location or manually enter the location code.

Ad hoc counts are listed on the Ad Hoc Count tab with the bin location code, the part number, the manufacturer, and the unit of measure.

If you have previously counted the inventory for a bin location, you can select the Counted in the past 24 hours filter option to see bins with inventory counted in the past 24 hours. Otherwise, the bins with inventory that you have already counted in the past 24 hours will not show in the list of bins.

Submitting the count

When you are finished counting, you can review the quantities for each part number on the Ad Hoc Count tab, and then submit the results. If there is no inventory to count in the bin, you can submit a count of 0.

After you submit the count, if there is a discrepancy between the physical count and the record in the system, the count results are listed on the Cycle Count Discrepancies tab for action.

Related concepts

Counting inventory

Related tasks

Record an ad hoc count

Record an ad hoc count

You can record an ad hoc count to ensure accurate inventory records for parts on an as needed basis.

About this task

You can use a mobile device to rapidly scan the barcode for inventory stored in bins that are sub-locations of serviceable and unserviceable stores. When you are finished counting, you can review the quantities for each part number on the Ad Hoc Count tab, and then submit the count.

If you find an unexpected part in a bin while counting inventory, you can manually record it as an unexpected part.

Important You must click **Submit** to add the part number and save the count for the unexpected part. If you do not click **Submit**, the information that you enter will be lost.

Steps

1. On your to-do list, click **Inventory Count**.
2. On the **Ad Hoc Count** tab, scan or manually enter a location code in the search field.
3. Click to search.
4. (Optional) If you want to filter the list of inventory to count, click , select the applicable filters, and then click **OK**. You can apply the following filters:
   - **Include Bins:** Shows bins that have inventory counted in the past 24 hours.
   - **Part Use:** Shows inventory based on the part use.
5. To enter a count, do one of the following for each part number:
   - Scan the inventory barcode.
   - Manually enter the count by typing a number in the field or use the **-** and **+** buttons.

   Tip If you want to defer the count for a bin location, click **x** on the right of the bin location code to remove it from the list. The bin location will re-appear when you refresh the page or return to the tab.
6. Click **Submit Count**.

If there is a discrepancy between the physical count results and the records in the system or if you add an unexpected part and submit the count, a discrepancy is listed on the **Cycle Count Discrepancies** tab for action.

Related concepts

Ad hoc counting

Using a mobile device for inventory counts

Related tasks

Record an unexpected part found

Addressing discrepancies

If there is a discrepancy between physical count results and the inventory record in CAMO, a count discrepancy is listed on the Cycle Count Discrepancies tab for action.

Discrepancies are identified if there is a mismatch in the actual quantity of inventory in the bin or if the serial or batch numbers counted in the bin don't match expected records. This happens during inventory counting, but discrepancies also arise when a storeroom clerk is unable to find and pick inventory reserved for a part request and subsequently clicks the Not In Stock button on the Issue tab.

On the Cycle Count Discrepancies tab, you can see the expected count results based on inventory records, the actual count result, and the difference in quantity. To help you prioritize the list for action and decide when to request recounts, the difference in price, the average price at receipt for the part number, and the ABC Class are also displayed.

When you review inventory count discrepancies, you have the following options for resolving them:

- Request a recount
- View recount results
- Ignore a discrepancy

Requesting a recount

If you request a recount, the status of the recount is shown as Requested on the Cycle Count Discrepancies tab and the count is added to the Recount tab for action by a storeroom clerk.

When the recount is recorded, if the results match the expected quantity for the inventory record, there is no longer a discrepancy and it is removed from the Cycle Count Discrepancies tab. If the recount results are still different than the expected result, then the status of the recount is shown as Done. You can then view the recount results and decide whether to update the inventory record or ignore the discrepancy.

Viewing recount results and performing corrections

You can view recount results to see corrective actions proposed by CAMO such as creating new inventory records, moving the inventory, or archiving/unarchiving inventory.

The Expiry Date is mandatory when you create inventory for a part with shelf life information by clicking the Perform Corrections button on the Recount Results page. If you enter the

Manufactured Date, the shelf-life expiry date is automatically calculated as the sum of the manufactured date and the shelf-life defined on the part. If you enter the shelf-life expiry date, the auto-calculation is stopped and overriden.

Note The information added for the Manufactured Date and the Expiry Date is only used to calculate the shelf life and does not affect the future maintenance schedule of the inventory items.

After viewing the recount results, you can use the Perform Corrections button to accept the proposed actions, which updates the inventory records and adjusts inventory quantities based on the physical count results.

A quantity adjustment (QTYADJ) financial transaction is recorded for the account you select on the Recount Results page.

Note You can also edit the inventory records directly instead of using the Perform Correction button.

Ignoring a discrepancy

If the discrepancy is negligible or you think the existing records are accurate, you can ignore the discrepancy and it is removed from the list.

Related concepts

Recounting for discrepancies

Related tasks

Request a recount
Update records based on recount results
Ignore cycle count discrepancies
Record a recount

Request a recount

If there is a discrepancy between the physical count results and inventory records, you can request a recount.

Steps

1. Go to the **Cycle Count Discrepancies** tab.
2. Select a discrepancy and click **Request Recount**.

- The bin and part information is added to the Recounts tab.
- If there is still a discrepancy after the recount results are recorded, the Recount column on the Cycle Count Discrepancies tab shows the Done status.

Related concepts

Addressing discrepancies

Update records based on recount results

If there is a discrepancy between the physical count results and the inventory records, you can perform the recommended corrections to resolve the discrepancy.

Steps

1. Go to the **Cycle Count Discrepancies** tab.
2. Select a discrepancy and click **View Count Results**.
3. In the **Account Information** area of the **Recount Results** page, select an account and optionally, enter a note.
4. From the list, select the discrepancies you want to adjust. Note the following:
   - Manufactured Date: If you enter a manufactured date for an item that has a shelf life, the expiry date is automatically calculated.
   - Expiry Date: Mandatory for parts with shelf-life configured.

   Note You cannot make further corrections after you click **Perform Corrections**.

5. Click **Perform Corrections**.

Related concepts

Addressing discrepancies

Ignore cycle count discrepancies

If there is a discrepancy between the physical count results and the inventory records, you can ignore the discrepancy. You might choose to do this if the discrepancy is negligible.

Steps

1. Go to the **Cycle Count Discrepancies** tab.
2. Select a discrepancy and click **Ignore Discrepancy**.
3. On the **Confirm** page, click **Yes**.

Related concepts

Addressing discrepancies

Recounting for discrepancies

Recounts are requested to help resolve discrepancies that are a result of cycle counts and ad hoc counts.

You can use a mobile scanning device to record a recount for discrepancies. Discrepancies are raised if the quantity of inventory for a part number in a bin or if the serial or batch numbers counted in the bin don't match the expected inventory records.

If a recount is requested, the status of the recount is shown as Requested on the Cycle Count Discrepancies tab and the count is added to the Recount tab for action by a storeroom clerk. A notification on the Recount tab shows the number of recounts to be addressed.

Starting the recount

To record a recount, you must first scan or enter the barcode, the serial number, or the batch number for each part in the bin. The barcode, the serial number, or the batch number that you enter is automatically mapped to the expected part number in the list.

If the serial or batch number maps to more than one part number in the bin location, you must select the applicable part number from the drop-down list.

Recording a recount for an unknown serial or batch number

If the serial or batch number you enter does not exist (does not have any inventory records) in the system for any of the part numbers in the bin location, you can select the applicable part number from the drop-down list to add the serial or batch number.

After you submit the recount, on the Recount Results page, the serial or batch number that you added will show in the Serial No / Batch No column and the Action column will suggest that you create the inventory item.

Identifying unserviceable inventory in serviceable stores

When scanning barcodes, serial numbers, or batch numbers for recounts in serviceable store locations, the inventory condition is validated so that unserviceable items (items that are not ready for issue (RFI)) are automatically identified. By default, a warning is provided.

You can then decide whether to count the inventory regardless of the condition or move it to an unserviceable staging location.

Note The severity of the validation of the inventory condition can be configured based on the requirements for your organization. For more information, see the *CAMO Administration Guide*.

Submitting the recount

If the recount results match the records in the system, the discrepancy is removed from the Cycle Count Discrepancies tab.

If there is still a discrepancy between the recount results and the records in the system, the status of the recount on the Cycle Count Discrepancies tab is listed as Done. You can then select the discrepancy and view the count results to determine which corrections to perform.

Related concepts

Counting inventory
Addressing discrepancies

Related tasks

Record a recount

Record a recount

You can record a recount for discrepancies to ensure that the inventory count results match the expected quantity.

About this task

You can use a mobile device to rapidly scan the barcode for inventory stored in bins that are sub-locations of serviceable and unserviceable stores. When you are finished counting, you can review the quantities for each part number on the Recount tab, and then submit the count.

Steps

1. On your to-do list, click **Inventory Count**.
2. (Optional) If you want to filter the list of inventory to recount, click ▼, select the applicable filters, and then click **OK**. You can apply the following filters:
   - **Bin Code:** Shows inventory based on the code for a bin location.
   - **Storage Location Type:** Shows inventory based on the storage location type.
   - **Part Use:** Shows inventory based on the part use.
3. On the **Recount** tab, do one of the following for each bin location:
   - Scan the barcode, the serial number, or the batch number.
   - Manually enter the barcode, the serial number, or the batch number and click +.

Tip When counting batch inventory, you can scan the barcode multiple times to increase the count. You can also scan the barcode for a part once and then manually increase the count for the total number of parts.

4. If the serial number exists for more than one part number in the bin or if the serial number does not exist in the system, select the applicable part number from the drop-down list.
5. Click **Submit**.

If the recount results match the records in the system, the discrepancy is removed from the Cycle Count Discrepancies tab. If there is still a discrepancy between the recount results and the records in the system, the status of the recount on the Cycle Count Discrepancies tab is listed as Done. You can then select the discrepancy and view the count results to determine which corrections to perform.

Related concepts

Addressing discrepancies
Recounting for discrepancies

Bulk export and import of inventory counts

You can export inventory for counting or recounting from CAMO to a comma separated value (.csv) file, perform the count, and update the file. Once updated, you can import the inventory count or recount results file to CAMO.

Export Inventory Count and Import Inventory Count Results

You can export inventory for counting on the Inventory Counts tab of the Bulk Export and Import tab. Inventory applicable for export are those stored in the bins of stores, where the bin location has been assigned to a department to which you have been assigned. When you export inventory for a count, you can choose to include all inventory to be counted, or filter inventory based on when the count was due, the ABC classification of the part, and the storage location for which inventory in bins should be counted. On exporting, a .csv file is downloaded, with the bin location code, part number, part name, manufacturer code, the count due date, as well as empty columns for recording the quantity and counted date of inventory counted. You can then update the file with the results of your cycle counting or ad hoc counts, if required.

You can count inventory and update the quantity and counted date of exported inventory. For inventory that has been exported for a count, if you do not find that inventory item in the specified bin location, you can enter the quantity as zero to indicate the inventory was not found. You can also record an unexpected part, which is a part that has been previously created in CAMO that does not have any bin levels or inventory, for the bin location that was counted.

Once you have finished updating the count, you can import the updated file on the Inventory Counts tab of the Bulk Export and Import tab. Once the count has been updated, and no discrepancies have been recorded, the next count date is updated based on the counted date and the interval defined for the part's ABC classification.

If there is a discrepancy between the physical count results and the records in CAMO or if you add an unexpected part and import the inventory count results, a discrepancy is listed on the Cycle Count Discrepancies tab for action, provided that a supply location has been defined for that inventory.

Export Inventory Recount and Import Inventory Recount Results

If discrepancies are found between the count results and the record in CAMO, and a recount has been requested, you can export the requested inventory for recount. Only inventory that has been requested for a recount, for bins in storage locations to which your department has been assigned, can be exported. You can export all requested inventory to be counted or filter inventory based on the storage location. On exporting, a .csv file will be downloaded, with the bin location code, part name, part number, manufacturer code, serial or batch number, as well as empty columns for recording the quantity and recounted date. You can then update the file with the results of your recount or record ad-hoc counts, if required.

You can recount inventory and update the quantity and recounted date of exported inventory. You can also record an unexpected part or inventory item, found while recounting inventory in a bin location, that has been predefined in CAMO, with a serial or batch number that has not yet been registered. If inventory is exported for a recount belonging to a part with multiple serial or batch numbers to be counted, and you cannot locate a particular inventory item you can set the quantity of that serial or batch number to zero to indicate that the inventory was not found.

After you recount inventory and record the recount results, you can import the updated file on the Inventory Counts tab of the Bulk Export and Import tab. The recount is updated from the Requested to the Done status on the Cycle Count Discrepancies tab. If the recounted quantity does not match the expected quantity of inventory or if the serial or batch numbers that were counted in the bin don't match expected records, a discrepancy is listed on the Cycle Count discrepancies tab for action.

Update Inventory Count or Recount

To ensure a successful import, while updating the file, you must retain the name and number of columns for recording inventory counts, in their exported format. You must also input only valid information, taking care to ensure the inventory counts being imported comply with the following criteria:

- The bin location code, part name, OEM part number and manufacturer code must be entered for all inventory to be imported and should be predefined in CAMO.

- The combination of the OEM part number and manufacturer code must match a part that already exists in CAMO.
- The counted date and quantity must be entered for inventory counts. Similarly, the quantity and recounted date must be entered for inventory recounts.
- The counted date and recounted date must be in the format dd-mmm-yyyy or dd-mmm-yy.
- The recounted quantity for each serialized inventory item must be either zero or one.

File Import Statuses

When you select your import file and proceed to import, you can view the status of the import. Possible statuses are as follows:

- Queued - the import file has been uploaded or queued for uploading.
- Processing - the uploaded data will be validated and continue to either the Imported or the Errors Logged status.
- Imported - all the data in the file is valid and has been updated accordingly in CAMO.
- Errors Logged - some or all of the data in the import file is invalid, in which case only the valid data has been imported and updated.

You can view an error log with reasons for the failure of the import due to invalid data, in the event that the imported file has the Errors Logged status

Related tasks

Export inventory for count
Import inventory count results
Export inventory for recount
Import inventory recount results

Export inventory for count

You can export inventory for counting from CAMO to a comma separated value (.csv) file, to be able to count inventory and update the actual count in CAMO, in bulk.

About this task

You can define values for filter options to filter the inventory to be exported for a count, or alternatively leave the filters clear to export all the inventory in CAMO for counting.

Steps

1. Go to the **Bulk Export and Import** tab.
2. On the **Inventory Counts** tab, click **Export Inventory for Count**.
3. (Optional) On the **Export Inventory for Count: Filter Options** page, to filter inventory to be exported, provide information for one or more of the following fields:

- **Count Due**: Select the date by which the inventory should be counted. Only the inventory for which the count was due on or before the selected date, will be exported.
- **ABC Classification**: Select one or more check boxes for the ABC Classification of the parts for which to export inventory.
- **Storage Location**: Select a store, for which to export inventory or leave this field empty to export inventory from all stores with existing bin locations.

4. Click **Export**.

If you do not have inventory to export for counting or if the inventory to be counted does not meet the filter criteria specified by you, on opening the file you are informed that you do not have inventory that was exported for a count.

CAUTION Opening the exported file with spreadsheet software alters the date format and any numerical values containing leading zeros. You should change any affected values and dates, adding leading zeros where necessary and ensuring the date is in the dd-mmm-yyyy or dd-mmm-yy format, before you import the inventory count results.

What's next

When you finish updating the exported file with the latest count, you can import the inventory count results to CAMO.

Related concepts

Bulk export and import of inventory counts

Related tasks

Import inventory count results

Import inventory count results

After you count inventory and record your results in a comma separated value (.csv) file, you can import the inventory count results to CAMO to update inventory records.

Prerequisite

- You must have saved data in a comma separated value(.csv) file in the following format:

  ```
  <Bin Location Code> <Part Name> <OEM Part Number> <Manufacturer Code> <Count Due Date> <Quantity> <Counted Date>
  ```

- You must have entered the bin location code, OEM part number, manufacturer code, quantity and counted date, at minimum, for each inventory count record in the file

Steps

1. Go to the **Bulk Export and Import** tab.
2. On the **Inventory Counts** tab, click **Import Inventory Count Results**.
3. On the **Import File** page, click **Choose File** and select your file to be imported.
4. On the **Import File** page, click **OK**.

Only the inventory count for rows with valid data is imported. If the import status is Errors Logged, you can view the cause of the error in the error log that can be accessed on the **Bulk Export and Import** tab. If there is a discrepancy between the physical count results and the records in CAMO or if you add an unexpected part and import the inventory count results, a discrepancy is listed on the **Cycle Count Discrepancies** tab for action.

Related concepts

Bulk export and import of inventory counts

Related tasks

Export inventory for count

Export inventory for recount

You can export inventory that has been requested for a recount from CAMO to a comma separated value (.csv) file, to be able to recount inventory and update the actual count, in bulk.

About this task

You can filter inventory to be exported by a single storage location or leave the filter clear to export all inventory that has been requested to be recounted.

Steps

1. Go to the **Bulk Export and Import** tab.
2. On the **Inventory Counts** tab, click **Export Inventory for Recount**.
3. On the **Export Inventory for Recount: Filter Option** page, to export inventory for recounting for bins belonging to a specific storage location, in the **Storage Location** field, select a storage location.
4. Click **Export**.

If no inventory has been requested for a recount or for those in a storage location selected by you, on opening the file you are informed that you do not have any inventory exported for a recount.

CAUTION Opening the exported file with spreadsheet software alters the date format and any numerical values containing leading zeros. You should change any affected values and dates, adding leading zeros where necessary and ensuring the date is in the dd-mmm-yyyy or dd-mmm-yy format, before you import the inventory recount results.

What's next

When you finish updating the exported file with the latest count, you can import the inventory recount results to CAMO.

Related concepts

Bulk export and import of inventory counts

Related tasks

Import inventory recount results

Import inventory recount results

After you recount inventory and record your results in a comma separated value (.csv) file, you can import the inventory recount results to CAMO.

Prerequisite

- You must have saved data in a comma separated value (.csv) file in the following format:

  `<Bin Location Code> <Part Name> <OEM Part Number> <Manufacturer Code> <Serial No / Batch No> <Quantity> <Recounted Date>`
- You must have entered the bin location code, OEM part number, manufacturer code, serial number / batch number, quantity and recounted date, at minimum, for each inventory recount record in the file.

Steps

1. Go to the **Bulk Export and Import** tab.
2. On the **Inventory Counts** tab, click **Import Inventory Recount Results**.
3. On the **Import File** page, click **Choose File** and select your file to be imported.
4. On the **Import File** page, click **OK**.

Only the inventory recount for rows with valid data is imported. If the import status is Errors Logged, you can view the cause of the error in the error log that can be accessed on the **Bulk Export and Import** tab. If there is a discrepancy between the physical count results and the records in CAMO or if you add an unexpected part and import the inventory recount results, a discrepancy is listed on the **Cycle Count Discrepancies** tab for action.

Related concepts

Bulk export and import of inventory counts

Related tasks

Export inventory for recount

Put away inventory

Inventory that's loose, serviceable, not issued, not locked, and not already in a storage location is listed on the To Be Shelved tab for put away in a warehouse bin. Your view of the tab, and the action you perform on it, depends on whether CAMO is configured to auto-complete put-away transfers.

Put-away transfers are automatically created when the following events occur:

- Serviceable inventory is turned in to the warehouse (serviceable stores).
- After an internal component work package is completed, inventory becomes serviceable and is transferred to the warehouse.
- Serviceable inventory is received from a vendor. It doesn't require inspection and isn't reserved.
- Inventory that requires inspection is received from a vendor. After inspection the inventory is serviceable and it isn't reserved.
- Serviceable inventory that was reserved, is unreserved.
- Serviceable inventory is reserved, but it's not immediately required.

Depending how CAMO is configured, you either complete all put-aways manually or most put-aways are automatically completed. In summary:

- On the To Be Shelved tab, when the AUTO_COMPLETE_PUTAWAY configuration parameter is false, put-aways, associated with the inventory that needs to be shelved, are displayed. If a pending put-away was created, you complete the put-away. If there's no pending put-away, you create one.
- On the To Be Shelved tab, when the AUTO_COMPLETE_PUTAWAY configuration parameter is true, you put-away inventory that CAMO could not automatically put away.

AUTO_COMPLETE_PUTAWAY put-away configuration

Parm value	Put-away behavior
False: put-aways are manually completed	On the To Be Shelved tab, you see the following buttons: • Complete Put Away • Create Put Away The Put Aways column is displayed. If there is exactly one bin level set for the inventory's part number, a put-away transfer is created in pending status. The item is listed on the To Be Shelved tab and the put-away information is displayed. (You can see a pending put-away transfer on the Inventory Details page, Open Moves sub-tab.) You click the Complete Put Away button and the location of the inventory item changes to the put-away bin. If none or multiple bin levels are set for the inventory's part number, the inventory is displayed on the To Be Shelved tab, but the put-away transfer is not created. You create the transfer, specify the put-away bin, and then complete the put-away afterward (by clicking the Complete Put Away button).
True: some put-aways are automatically completed	On the To Be Shelved tab, you see the following button: • Put Away Inventory The Put Aways column is not displayed. If there is exactly one bin level set up for the inventory's part number, the put-away transfer is automatically created and completed as one event. Inventory that is automatically put away is not listed on the To Be Shelved tab. When the transfer is complete, the location of the inventory changes to the put-away bin. For example, an item is received at the dock in INSPREQ condition. As soon as it's inspected as serviceable, the item location changes to the specified put-away bin. On the Inventory Details page, Historical Moves sub-tab, a history note records that the put-away is complete. (No pending put-away is recorded.) If none or multiple bin levels are set for the inventory's part number, the put-away transfer isn't automatically created and completed. The inventory is displayed on the To Be Shelved tab and you click the Put Away button to select the bin and complete the put-away transfer. A history note records that the put-away is complete.

You cannot put away inventory in RFB condition.

Complete pending put-aways

When put-away transfers are created in pending status, they are listed on the To Be Shelved tab with the bin location identified. When you complete the put-away in CAMO, the inventory location changes to the bin location.

Prerequisite

A pending put-away must exist before you can complete a put-away. If you don't see information in the Put Aways column for an inventory item, you must create the put-away first.

Steps

1. On your to-do list, **To Be Shelved** tab, select check boxes for one or more inventory items.

   Note If you don't see a Complete Put Away button, see the topic"Record put-aways with Put Away Inventory button".

2. Click **Complete Put Away**.
3. On the **Complete Put Away** page, verify the put-away details.
4. (Optional) Enter or scan the inventory barcode and click **Validate**.
5. Click **OK**.

Related tasks

Record put-aways with Put Away Inventory button
Create put-aways

Create put-aways

On the To Be Shelved tab, if no bin is specified for a listed item or if more than one bin level is specified for the inventory's part number, CAMO cannot create pending put-away transfers. You must create the transfer and specify the put-away bin before you can complete the put-away.

Steps

1. On your to-do list, **To Be Shelved** tab, select the check box for an inventory item.
2. Click **Create Put Away**.

   Note If you don't see a Create Put Away button, see the topic"Record put-aways with Put Away Inventory button".

3. On the **Create Put Away** page enter a bin location.
4. Select an option to create, or not create a standard bin location.

5. Click **OK**.

What's next

Complete the pending put away.

Record put-aways with Put Away Inventory button

In some organizations most put-aways are recorded in CAMO automatically. But CAMO cannot automatically create put-aways if no bin or more than one bin is specified. In these cases, inventory items are listed on the To Be Shelved tab where you manually specify the bin and record the put-away.

About this task

Is this the right topic? If you don't see a Put Away Inventory button on the To Be Shelved tab, see the topic "Complete pending put-aways".

Steps

1. On your to-do list, **To Be Shelved** tab, select one or more parts and click **Put Away Inventory**.
2. On the **Put Away Inventory** page, do one of the following:
   - If a bin is listed, confirm that the location is correct.
   - If no bin is listed, or if the bin is incorrect, enter a bin location, then select an option to create or not create a standard bin location.
3. Click **OK**.
4. If you created a new bin location, write the selected bin on the part's serviceable part tag.

Related tasks

Complete pending put-aways

Turn-ins

A turn-in is a type of transfer that moves parts from a maintenance site to the warehouse. Turned in parts are routed to serviceable staging, unserviceable staging, or quarantine. CAMO automatically creates expected turn-ins and turn-ins can also be manually created and completed.

Expected and pending turn-ins

Pending turn-ins are created when parts are removed. Many of these turn-ins are expected. When repairable inventory is issued to fulfill a part request, storeroom clerks expect that a part with the same part number will be removed and turned into the warehouse. So for every repairable inventory item that's issued, CAMO creates an expected turn-in row on the Turn In tab.

On a task that includes a part requirement for an installation and a removal, the expected turn-in row displays the following information:

- When inventory is issued but the removal is not yet performed, the row displays only information about the issued inventory. "Unknown" is displayed in the To Be Turned In columns. At this point the turn-in is expected, but not pending.
- When the removal is recorded, the row is updated. The To Be Turned In columns show the serial or batch number of the removed part and a pending turn-in transfer for the removed part is created. You can see a record of the pending transfer on the Inventory Details page, Open tab, Open Moves sub-tab.

When the removed part is physically passed from the maintenance site to the storeroom clerk, the clerk completes the turn-in. The row is no longer listed on the Turn In tab, but you can see a record of the completed transfer on the Inventory Details page, Historical tab, Movement sub-tab.

From time to time, parts are issued, but not used:

- If the task is canceled, this cancels the part request. The existing row on the Turn In tab is updated to show information about the issued part in the To Be Turned In columns. You can then complete the turn-in.
- If you turn in the issued inventory before the task is canceled, you manually update the turn-in with information about the issued part when you complete the turn-in.

Unexpected turn-ins

If a part is removed on a task and there is no expected turn-in, a pending turn-in is created for the removed part and a row is added to the Turn In tab. In CAMO terms, this turn-in is out of sequence. In all likelihood, inventory will be issued later on the same task or on another task to replace the removed part so you don't want an expected turn-in created when the pending turn-in for the removed part is already created.

What happens next depends on whether the part was removed:

- On a task with a part requirement to remove and install.
- On a task with a part requirement to remove. (The install is on a separate task).

Let's look first at an out of sequence removal on a task with a part requirement to remove and install in an IN WORK work package.

1. When the part is removed, CAMO adds a pending turn-in row to the Turn In tab. The To Be Turned In columns show information about the removed part but there is no issued inventory information and no expected turn-in date.
2. When inventory is issued, instead of updating the existing row, CAMO temporarily creates another row on the Turn In tab that shows only information about the issued part. However, this row disappears when the issued inventory is installed.

Only the pending turn-in for the removed part needs to be completed.

When a removal is recorded on a task that only has the part removal requirement:

1. CAMO adds a pending turn-in row to the Turn In tab. The To Be Turned In columns show information about the removed part but there is no issued inventory information and no expected turn-in date.
2. The task is completed and the removed part is turned in. The turn-in is now complete.
3. A clerk issues inventory for a task with a part requirement to install a part in the same configuration slot. CAMO checks for matching historical turn-ins and if any are found, displays them on the Unexpected Turn Ins page.
4. The clerk can link to a historical turn-in or create a new expected turn-in. If the clerk links to a historical turn-in, CAMO does not add a new expected turn-in row to the Turn In tab.

What turn-ins are displayed on the Unexpected Turn In page?

The Unexpected Turn In page is only displayed when an inventory item is being issued and there is a completed turn-in in the same supply location for a part with the same part number or a valid alternate part number, and the completed turn-in has no issued part information. In addition, turn-ins are only displayed when the following conditions are met:

- The task that resulted in the removed part being turned in, is COMPLETE.
- The turn-in occurred the specified number of days before the issue date as configured in the UNEXPECTED_TURN_IN_SEARCH_DAYS configuration parameter.

Monitoring turn-ins

By default the Turn In tab displays only pending turn-ins that are expected because inventory was issued to a maintenance task. To see all pending transfers including turn-in of removed components that are not directly associated with an issue transfer, you can select the **Include all turn-ins** check box. Users that select this check box see the full list every time they log in.

The Expected Turn In Date column on the Turn In tab, is based on the number of days after inventory is issued for a maintenance task, that is specified by the EXPECTED_TURN_IN_DELAY configuration parameter. For this reason, expected dates are only show for turn-ins created when inventory is issued and not when parts are removed.

Manual turn-ins

On the Turn In tab, if you select a turn-in and click the Turn In button, this completes a pending turn-in. If you don't select a turn-in and you simply click the Turn In button, you get a page which you use to manually create and complete a turn in.

If you manually turn-in a part for which there is already a pending turn-in transfer, the manual turn-in is completed and the pending transfer is canceled. This is important to note if you prefer to use the manual page to scan in the barcode of an item that you need to turn-in.

You also do manual turn-ins when expected turn-ins aren't created, such as when a kit is issued but not used. Kits are not repairable, so CAMO does not create expected turn-ins for them. (Although, expected turn-ins are created for all repairable inventory items inside kits).

Turn-in processing

CAMO processes turned in inventory based on its financial type, class, and condition.

- Turned in inventory is routed according to inventory condition:

Turn-in condition and routing

Condition	Routed to
RFI	Serviceable staging
REPREQ	Unserviceable staging
QUAR	Quarantine
RFB – when Ready for Build is enabled, inventory can be serviceable even though it's missing mandatory sub-components. You select the RFI condition when turning in RFB-condition items; they are routed to unserviceable staging and repair routers can see the reason for repair is RFB.	Unserviceable staging

- When you turn-in consigned components, with the ownership type of CSGNRCVD, CAMO changes their ownership back to the vendor, and reduces the consignment owed quantity by the turned in quantity.
- If the inventory that you turn in does not exist in the system, and all mandatory fields in the Turn-in page are filled in, CAMO creates a record for the inventory automatically, and sends an alert message to designated users and roles.
- When you create a turn-in for batch inventory, CAMO tries to merge the turned-in items into their original batch. If this is not possible, then it creates a new batch for the turned-in items.
- When you turn in a kit, if there is a mix of serviceable and unserviceable repairable items, then instead of turning in the kit and all its contents at once, you can select all the RFI kit contents for turn in. The kit contents that you don't select are removed from the kit and remain on the Turn In tab. You complete these turn-ins, one item at a time, and select a REPREQ condition so that they are routed to the Unserviceable Staging tab.

Related tasks

Link to historical turn-in

Turn in inventory

When components are turned in to the warehouse, you record the turn-in and move the item to the appropriate staging area. The condition of the turned in component determines where it's routed.

About this task

Use the following steps to complete pending turn-ins or to manually create and complete turn-ins.

Tip If there's a pending turn-in on the tab, but you prefer to turn in by scanning the part's barcode instead of finding and selecting the pending turn-in, you can do a manual turn-in. This creates and completes a new turn-in and cancels the existing, pending turn-in.

Steps

1. Go to your To-do List, **Turn In** tab.
2. Decide what you want to see on the tab list. By default, only expected turn-ins created for issued repairable components are shown. To show turn-ins for removed parts that aren't associated with issue transfers, select the **Include all turn-ins** check box.
   After you select the check box, you see the same view of the Turn In tab page every time you log in. To return to the default view, clear the **Include all turn-ins** check box.
3. (Optional) To filter the list, from the **Part Type** list, select a part type.
4. Do one of the following:
   - Select a pending turn-in and click **Turn In**.
   - Click **Turn In**.
5. On the **Turn In** page, do one of the following:
   - Verify that the information matches the item's part tag. Change the condition if required (if you have the required permission).
   - Scan the barcode or enter the requested information.

Note To turn-in components in RFB condition, from the **Condition** list, select **RFI**. RFB items are routed to unserviceable staging.

Note **Shelf-Life Expiry** is displayed only for batch parts with shelf-life information. If the batch is new, or if an existing batch does not have an expiry date recorded, this field is mandatory. Enter the expiry date from the part's label, or enter a Manufactured Date and CAMO will calculate the expiry date for you. Once the expiry date is calculated, the field is disabled and cannot be edited. If the batch already has an expiry date recorded, the field is disabled and displays the inherited value.

6. Click **OK**.

Cancel inventory turn-in

About this task

If your to-do list's Turn In tab incorrectly lists inventory to be turned in, you can remove it from the list.

Steps

1. On your to-do list's **Turn In** tab, select an inventory item and click **Cancel Turn In**.
2. On the **Cancel Turn In** page, select a **Reason** and enter a **Note**.
3. Click **OK**.

Mark inventory in need of repair

About this task

After inspection or quarantine, you may determine that the inventory needs repair.

Steps

1. On your to-do list, **Quarantine** tab, select an inventory item and click **Mark as Repair Required**.
2. On the **Mark as Repair Required** page, provide the requested information and click **OK**.
3. If prompted, enter your password and click **OK**.

Assign repair locations to parts

About this task

You can specify which repair locations are to be used for a part.

Steps

1. Find a part by doing one of the following:
   - On the **Part Search** page, enter your search criteria, and click **Search**.
   - On your to-do list, on any tab that lists parts, in the **Part No** column, click the link.
2. On the **Part Details** page, **Details** tab, **Repair Locations** area, click **Assign Repair Location** .
3. On the **Location Search** page, enter your search criteria and click **Search**.
4. From the search results, select one or more locations and click **Assign Location**.

Add shipping and storage information to parts

About this task

You can specify shipping, packaging, and storage details for parts including if the part is hazardous material, if there are special packaging or shipping instructions, and if any special documents are required.

Steps

1. Find a part by doing one of the following:
   - On the **Part Search** page, enter your search criteria, and click **Search**.
   - On your to-do list, on any tab that lists parts, in the **Part No** column, click the link.
2. On the **Part Details** page, **Details** tab, **Details** area, click **Edit Part**.
3. On the **Edit Part** page, **Shipping**, **Packaging** and **Storage** area, provide the requested information and click **OK**.

Storage maintenance

Loose, serviceable inventory in the warehouse can require periodic maintenance. For example, seals might need lubrication, or you might need to visually inspect components sitting on the shelf.

These tasks are modeled with task definitions and you can track and assign off-wing maintenance from your to-do list's Storage Maintenance tab.The tab lists components at your location that are not installed on an aircraft, but that have upcoming maintenance tasks to be completed while the components are in storage. The tab does not list unserviceable components.

The appropriate role needs to create a requirement (task definition) for storage maintenance. You can then use the Storage Maintenance tab to find inventory in your location that's due for maintenance, create and schedule internal or external work packages, move items to the appropriate shop, or package and complete tasks.

When you create a requirement for a storage task, note the following fields or options:

Requirement Type: select Part Number

Scheduling Details: select the Recurring check box

Create/Cancel on Install: select Cancel on Install or Cancel on Aircraft Install

Create/Cancel on Removal: select Create on Removal or Create on Aircraft Removal

Schedule From: select Received Date

Planning Details: Do not select the On Condition check box.

Related concepts

Creating or canceling tasks on installation or removal

Find stored inventory that requires maintenance

You can find stored inventory that's due for maintenance on the Storage Maintenance tab. You can then package and complete a maintenance task, or create internal or external work packages, and move items to the appropriate shop.

About this task

To narrow the list, you can apply filters including location, part type, tasks unassigned to work packages, and number of days until tasks are due.

What you see in the Due Date column:

- A bold font due date indicates that the task has a hard deadline and must be completed by this date.
- A red color due date indicates that the task is overdue.
- If there are two dates and one is in brackets: The first date is the scheduled due date. The second date is the extended due date - which is calculated by adding the allowed deviation to the scheduled due.

Steps

1. Go to your To-Do list **Storage Maintenance** tab.
2. (Optional) To filter the list by any of the following, click **Options** above the table, choose your settings, and click **OK**.
   - Part Type
   - Show tasks due within a specified number of days: Shows tasks due on or before the current date plus the number of days that you specify. Enter an number, not a range of days.
   - Hide assigned tasks: If you select this check box, the list shows tasks that aren't in work packages.
   - Location: Enter a location code. You can enter a broader code such an airport or supply location, or a more granular code such as a serviceable stores or bin. For example YOW or YOW/SRVSTORE, or YOW/2305-01.

     Note If you enter an invalid code, then records for all locations (in departments that you belong) to are displayed.

Related tasks

Package and complete tasks done in the past

Create work packages for an aircraft or component

Shelf life and shelf life expiry

Some inventory has a shelf life period and a shelf life expiry date.

Shelf life is the period of time (months, years, quarters of years, hard dates, etc.) for which parts and materials can be stored and during which they retain their chemical properties. After that, they lose some of their properties and can no longer be used.

Shelf life expiry indicates the date by which a given piece of inventory must be used. The shelf life for parts is defined by engineers in the part definition. The shelf life for a part can be changed in the edit Part Details page.

When inventory with that part number is received, the shelf life expiry date is automatically calculated by combining the manufactured date that's entered with the shelf life of the part. You can also enter the shelf life expiry date manually or edit the shelf life expiry on the Inventory Details page.

When an ordered inventory item is received from a vendor and its remaining shelf life before expiry is below the percentage your organization allows (as configured in the PERCENT_SHELF_LIFE_WARNING parameter), the item is routed to quarantine. If items are shipped between internal supply locations, their remaining shelf life is not assessed unless you set the SHELF_LIFE_REMAINING_VALIDATED_FOR_INTERNAL_SHIPMENT parameter to true.

Shelf-Life Expiry is mandatory when you manually create inventory for a part with shelf life information by clicking the **Create Inventory** button on the Part Details page. If you enter the Manufactured Date, the shelf-life expiry date is automatically calculated as the sum of the manufactured date and the shelf-life defined on the part. If you enter the shelf-life expiry date, the auto-calculation is stopped and overriden.

Shelf-Life Expiry is also mandatory when you turn in a serviceable batch part that contains shelf-life information, if the batch is new or does not already have an expiry date recorded. As with **Create Inventory**, you can either enter the expiry date from the part's label or enter a Manufactured Date so that CAMO calculates the expiry date for you. Unlike **Create Inventory**, once the expiry date is calculated during turn-in, it cannot be edited. If the batch already has an expiry date recorded, the field is disabled and displays the inherited value. When a new expiry date is set during turn-in, it is applied to all other batch inventory records that share the same part and batch number and do not already have an expiry date.

In the warehouse, if the shelf life of an item is approaching its expiry date, it's displayed on the storeroom manager's Pending Expiry tab. Once an inventory item's shelf life has expired, its status changes to CONDEMN.

Record the shelf life of parts

About this task

The shelf life of a part is the maximum amount of time a part should be kept in inventory. You can set a value in hours, days, weeks, months, or years.

Steps

1. Find a part by doing one of the following:
   - On the **Part Search** page, enter your search criteria, and click **Search**.
   - On your to-do list, on any tab that lists parts, in the **Part No** column, click the link.
2. On the **Part Details** page, **Details** tab, click **Edit Part**.
3. On the **Edit Part** page, **Part Details** area, beside **Shelf Life**, do the following:
   - In the first field, enter a numerical value.
   - From the drop-down list, select a time period.
4. If prompted, enter your password and click **OK**.

Materials shipments and transfers

Create shipments

About this task

Before you can ship parts, you must create a shipment in CAMO. You might do this as part of another task, such as creating a repair order, or managing part requests. To ship more than one item in a shipment, you can add items as additional shipment lines.

Steps

1. Find a part by doing one of the following:
   - On the **Part Search** page, enter your search criteria, and click **Search**.
   - On your to-do list, on any tab that lists parts, in the **Part No** column, click the link.
2. On the **Part Details** page, click **Create Shipment**.
3. On the **Create Shipment** page, provide the requested information and click **OK**.
4. On the **Shipment Details** page, **Shipment Lines** tab, click **Add Part Shipment Line**.
5. On the **Add Shipment Line** page, provide the requested information and click **OK**.

Pick items for a shipment

About this task

After a shipment is created and all shipment lines have associated inventory, you must collect the items to be shipped, prepare them for shipping, and send them to the dock.

If a shipment contains shipment lines where the specific inventory has not yet been selected, you must pick the inventory for the shipment. When the inventory is picked, the inventory serial number or batch number is identified on the shipment line, and the inventory's location is automatically moved to the dock location.

Steps

1. On your to-do list, **Outbound Shipments** tab, select a shipment and click **Pick Items For Shipment**.
2. On the **Pick Items For Shipment** page, scan the barcode of the item into the **Barcode** field, or enter the OEM part number and serial number/batch number.
3. Click **Add Part**.

> **Note** On the **Picked Items** tab, the condition of Ready for Build items shows as RFI.

4. For batch parts, in the **Pick Qty** column, enter the quantity.
5. Click **OK**.
6. If a warning displays, click **Yes** to continue, and correct any errors on the **Pick Items For Shipment** page.

> **Tip** Click the error message for more information about the error.

Package parts for shipment

About this task

You need to find the items to be shipped in the warehouse and package them.

Steps

1. On your to-do list, **Outbound Shipments** tab, select a shipment and click **Print Pick List**.
2. Print the pick list report.
3. In the warehouse, locate the items to be shipped in the bin locations listed on the pick list report.
4. Take the listed items off the shelves, and pack them.

Print shipping forms

Steps

1. On your to-do list, **Outbound Shipments** tab, select a shipment and click **Print Shipping Form**.
2. Print the shipping form report.
3. Attach the printed shipping form report to the shipment package.

Move shipment items to the dock

About this task

If the shipment line already contains the serial number of the item to be shipped, you do not need to pick the items for the shipment. For these items, you must move the item to the dock location.

Steps

On the **Shipment Details** page, **Shipment Lines** tab, select the shipment lines and click **Move to Dock**.

Create waybill groups

About this task

You can assign pending shipments to or from the same destination using a waybill group. When a shipment is assigned to a group, it shares the following properties with all other shipments in the group:

- Waybill number
- Transportation type
- Flight
- Flight status
- Carrier name
- Estimated arrival date
- Customs number
- Customs declaration

After you create the waybill group, you can send the shipment.

Steps

1. On your to-do list, **Outbound Shipments** page, select shipments with the same location listed in the **From** column, and the same location listed in the **To** column.
2. Click **Assign To Waybill Group**.

3. On the **Assign To Waybill Group** page, provide the requested information and click **OK**.

Route shipments

About this task

You can add routing segments to a shipment after the shipment has been created. Do this if the shipment must travel through multiple locations before reaching its final destination.

Steps

1. On the **Shipment Details** page, Details tab, Routing area, click **Edit Routing** .
2. On the **Edit Routing** page:
   - Click **Add Segment** .
   - Enter a dock or supply location for an intermediate shipping segment. For a final shipping segment, enter a vendor location.
3. Do one of the following:
   - To save your changes and continue on the **Edit Routing** page, click **Apply**.
   - To save your changes and close the **Edit Routing** page, click **OK**.

Send shipments

About this task

You can send a shipment only after all items included in the shipment are recorded in CAMO as picked, and all of the items are at the dock location. The Ready for Shipping check box on the Shipment Details page indicates if these conditions have been met.

After the shipment has shipped, record the shipping details in CAMO.

Steps

1. On the **Shipment Details** page, click **Send Shipment**.
2. On the **Send Shipment** page, provide the requested information and click **OK**.

Transfer inventory

To move inventory within a supply location, for example an airport, you transfer the inventory.

About this task

A transfer can include only one inventory item.

When you manually transfer inventory, the following restrictions apply:

- If an issue transfer is created but not completed, you cannot create a stock transfer.
- If inventory is currently in an in-transit shipment, you cannot transfer it without first completing the shipment. This scenario can happen if inventory is physically received but the receipt isn't recorded yet in CAMO.

New transfers are in pending status, and can be canceled or completed.

Steps

1. On the **Inventory Details** page, click **Create Transfer**.
2. On the **Create Transfer** page, click **Select Local Location** .
3. In the **Select Local Location** dialog box, click a location.
4. On the **Create Transfer** page, click **OK**.
5. On the **Transfer Details** page, click **Complete Transfer**.
6. Click **Print Transfer Ticket**.

Tools

Most tools that are used in maintenance are tracked and have serial numbers. Batch tools that form a personal tool kit or that are general purpose tools, such as drill bits and sockets, do not need serial numbers.

Tool requirements and tool availability

Tools can be stored at different geographic locations. They are used for maintenance tasks based on their availability.

The Tools tab on the Work Package Details page shows tools and their availability. This page also displays whether the tool is available locally, remotely, or not at all. Based on this information, appropriate decisions can be made by maintenance personnel.

Tool requirements are included in tasks as an indication that they are needed for the task. Unlike parts, CAMO does not generate requests for tools and does not reserve tools.

When you add a tool requirement to a task, you select the part number of the tool from the tools and support equipment (TSE) assemblies. If tool inventory is not available locally during the time the work package is scheduled, your material controller fills the requirement by having tools shipped in from remote locations, or by creating a purchase order to buy new tools. If the

tool inventory will not be available in time, your material controller communicates the problem to the maintenance organization so that the task can be scheduled later, or the entire work package rescheduled. If more tools are required to complete the task than are initially expected, a technician can add a tool to the task.

Tool control

Tools are tracked because they are expensive resources and can cause non-compliance issues if they are not fit for use in maintenance tasks or if they are accidentally left on aircraft after maintenance work is done.

You can track specialized tools in CAMO by using serial numbers and barcodes. You can store these tools in a secured tool room and require that technicians check tools out and in as maintenance work is done. When a tool is checked out, the Expected Return Date is displayed. You can monitor the Checked Out Tools tab and investigate when tools are not returned on time.

Tool crib clerks can manually enter the expected return date when tools are checked out, or if an hours value is specified for the EXPECTED_TOOL_CHECKOUT_DURATION configuration parameter, then CAMO adds the specified number of hours to the system date/time at check-out and automatically populates the Expected Return Date field. You can override an auto-populated date by manually entering a date.

Tool maintenance

Technicians can be assigned to perform maintenance on tools, such as calibrations. They can use CAMO to raise faults on tools, but the warehouse manages the location and status of individual tool serial numbers.

Calibration tasks can be initialized on tool inventory in the same way as calibration tasks are initialized for aircraft inventory. Serialized tools may require calibration to be performed based on a specific maintenance schedule. The scheduling of this maintenance task is specified in CAMO, which determines when calibrations are due. Tool personnel can monitor when tools are coming due for calibration on the Tool Search page. If the deadline of a calibration task is extended, the tool's Calibration Due By date is updated with the new due date.

Check out tools

You check tools out of the tool crib to technicians who work on maintenance tasks or to runners who deliver tools to technicians.

About this task

If you use a programmed scanner, the cursor automatically moves from these fields to the next field in this order:

- User
- Work Package/Task
- Tool Barcode
- OK

If you enter information manually, you can still speed up check-out by pressing Enter on your keyboard to move the cursor. To enter the Expected Return Date or add a Note, click in the field.

Steps

1. On your to-do list, **Checked Out Tools** tab, click **Check Out Tool**.
2. On the **Check Out** page, scan the technician's badge or enter the **User** name.
3. Do one of the following:
   - To skip the **Work Package /Task** field, on your keyboard press enter.
   - In the **Work Package /Task** field scan or enter a work package barcode or a task barcode.
4. (Optional) Edit or enter the **Expected Return Date**.
5. Under **Tool Details**, do one of the following:
   - Scan or enter the **Tool Barcode**.
   - Enter the part number and serial number of the tool.
   - Use the search to locate the part number and serial number.
6. Do one of the following:
   - To check out more tools for the same user, click **OK and Repeat**.
   - If you are done for this user, click **OK**.

   Tip To speed up the process:
   - Instead of using the mouse to click OK, you can press Enter on your keyboard.
   - Instead of using the mouse to click OK and Repeat, you can press Tab then Enter on your keyboard.

7. If prompted for a password, ask the technician to enter their password.

Check in tools

When checked out tools are returned from the maintenance floor to the tool crib by technicians or runners, you check them in.

About this task

If you use a programmed scanner, the cursor automatically moves from these fields to the next field in this order:

- User
- Tool Barcode
- OK

If you enter information manually, you can still speed up check-in by pressing Enter on your keyboard to move the cursor.

Steps

1. On your to-do list, **Checked Out Tools** tab, click **Check In Tool**.
2. On the **Check In** page, scan or enter the **User** name of technician that is returning the tool.
3. Do one of the following:
   - Scan or enter the **Tool Barcode**.
   - Enter the part number and serial number of the tool.
   - Click search to find and assign a tool.
4. (Optional) Add a note with information that future users of the tool or tool crib clerks need to know, such as the condition of the tool.
5. Do one of the following:
   - To check in more tools for the same user, click **OK and Repeat**.
   - If you are done for this user, click **OK**.

   Tip To speed up the process:
   - Instead of using the mouse to click OK, you can press Enter on your keyboard.
   - Instead of using the mouse to click OK and Repeat, you can press Tab then Enter on your keyboard.

6. If prompted for a password, ask the technician to enter their password.

Tool monitoring

For safety and compliance reasons, tools are monitored to ensure that they are returned to the tool crib when expected and that they are properly maintained and fit for use in maintenance tasks.

In tool searches, you can see the date of the next calibration task for each tool. If tools are overdue for maintenance tasks you can't check them out, but it is possible for a tool to become due or overdue for calibration while it's checked out. As a regular part of your tool management process, you can search by date for tools with upcoming calibration tasks, and you can review the list of tools that were due back but not returned.

Monitor expected return of tools

To ensure that tools are returned and not left on aircraft when maintenance tasks are finished you can monitor the expected return date for tools.

Steps

On your To Do List **Checked Out Tools** tab, view the **Expected Return Date**.

The Expected Return date of tools that are overdue are displayed in red color. You can sort the list on the Expected Return Date column.

View check-in/out tool history

To see who recorded the tool check-out or check-in and system notes for the event as well as the name of the check-in/check-out user, view the Inventory Details for the tool.

About this task

This tool history is helpful if a tool is still checked out after its expected return date or if a tool was returned in an unserviceable condition.

Steps

1. On your **Checked Out Tools** tab, for a listed tool, click the serial number.
2. On the **Inventory Details** page, click the **Check In/Check Out History** tab.

   You can specify how many days of history you want to see.

Find tools coming due for calibration

To ensure that tools are fit for service and to prevent non-compliance issues because tools are out of calibration, you can monitor which tools are coming due for calibration.

About this task

If a calibration task deadline is extended, the calibration due date for the tool is updated.

Steps

1. From the CAMO drop-down list, select your role and then **Tool Search**.
2. On the **Tool Search** page, in the **Calibration Due Before** field, enter a date.
3. Enter other search criteria that you want and click **Search**.

Transfer tools to maintenance locations

Sometimes tools are not stored in the tool crib, but are placed for the long term in a maintenance location. To maintain accountability without displaying these tools on the Checked Out Tools tab, you can transfer tools and assign custody to a user in the maintenance location.

About this task

Clerks monitor the Checked Out Tools tab regularly so it's not optimal to display tools day after day when their return is not expected.

After you change the location and custody, the tool still appears in a tool search that you do to monitor for upcoming calibration tasks.

As an alternative to the following procedure if you want to check tools out long term and if you have set up department and location mapping, you can transfer the tool and configure the Checked Out Tools tab to display only tools that are controlled by the tool crib.

Steps

1. On the **Inventory Details** page for a tool, click **Create Transfer**, enter a **Transfer To** location and click **OK**.
2. On the **Transfer Details** page, click **Complete Transfer** and click **OK**.
3. (Optional) On the **Transfer Details** page, **History** tab, click **Add Note**.
4. On the **Inventory Details** page, click **Change Custody**.
5. On the **Change Custody** page, In the **Received By** field, enter the name of the user who is taking custody.
6. Enter user password and click **OK**.
7. View custody details on the **Inventory Details** page > **Historical** tab > **Additional** sub-tab.

8

Procurement and finance

Orders

When the inventory that you need is not available at your location, you create an order.

You can create the following types of orders:

- Purchase
- Exchange
- Borrow
- Repair
- Consignment
- Consignment exchange

Each order has five basic components:

- **Order Type:** CAMO uses different order types to model different situations.
- **Part or Service Information:** Each order contains order lines that detail the parts or services in question.
- **Vendor Information:** Information about the vendor supplying the part or service.
- **Financial information:** Information about the payment terms and price of the product or service, including any other taxes and charges.
- **Transportation information:** Information about how and where the parts are moved, including the transportation type, the ship-to location—usually the local dock—and the expected by date.

After you create an order, you can edit it, and depending on the type of order, you can add parts to the order, add non-part items such as warranties and insurance, add customs and shipping charges, and add taxes.

If you update the Ship To location on a purchase, repair, or exchange order, this information is updated on the inbound shipment as long as the shipment is still pending (PEND status). After all or part of a shipment is in progress, you cannot update shipping information on an order. If you want to change where inbound inventory is shipped to, you do it directly on the shipment.

Auto-created orders

When the stock low action is POREQ and the stock number is configured for auto-creation and auto-issue of purchase orders, the purchase contact on the automatically created orders is the MXPURCHASE system user.

To find auto-created orders and assign them to a purchasing agent, you can search for orders using a combination of filters and then bulk assign the orders found. For example, you might filter the order search with the following options depending how you divide work among purchasing agents:

- Purchase contact: MXPURCHASE and purchase type.
- Purchase contact: MXPURCHASE and vendor.

Related tasks

Find orders by purchase type

Change purchase contact for orders

Find orders by purchase type

You can search for orders by purchase type to find orders you're responsible for or to assign them to the appropriate person. For example, one person might process all orders for a particular ATA chapter.

About this task

Filtering by purchase type is useful for identifying orders that were auto-created by the MXPURCHASE system user as a result of a stock-low action. On the Order Search page, searching by purchase type returns results that include any orders with order lines for parts whose part groups have the specified purchase type.

Steps

1. From your role menu, select one of the following:
   - **Order Search**.
   - **Order Search By Type**.
2. If searching by type, from the **Search Type** menu, select **Search by Contact**.
3. From the **Part Group Purchase Type** list, select a purchase type.
4. (Optional) Select other search criteria that you want.
5. Click **Search**.

Related concepts

Auto-created orders

Related tasks

Change purchase contact for orders

Change purchase contact for orders

When you search for orders and view the search results, if you have the required permission, you can bulk assign orders to yourself or to other purchasing agents.

Steps

1. From your role menu, select one of the following:
   - **Order Search**.
   - **Order Search By Type**.
2. On the **Order Search** page, enter your search criteria and click **Search**.
3. On the **Orders Found** tab, select the check boxes of the orders you want to reassign and click **Change Contact**.
4. On the **User Search** page, do one of the following:
   - To assign yourself, select the check box for your user name and click **Assign User**.
   - To assign someone else, enter your search criteria and click **Search**. From the search results, select the check box for the user you want and click **Assign User**.

   The change is recorded in a history note for the order and the order is displayed on the assigned user's My Open Orders tab.

Related concepts

Auto-created orders

Related tasks

Find orders by purchase type

Purchase orders

You can create purchase orders to procure parts and services from vendors when a part request for a part requirement on a task cannot be fulfilled with local inventory.

Purchase orders can be promoted from purchase requests, or stock requests for stock low situations, but you can also create an ad hoc purchase order for parts and services at any time.

For the auto-create PO and auto-issue PO features to function correctly, the ordered part must be associated with a purchase vendor and have a vendor price. You can review this information on the Vendor Details/Parts/Purchase and the Part Details/Vendors/Purchase pages.

Create purchase orders for part requests

Steps

1. On your to-do list, **Open Part Requests** tab, select a part request and click **Create PO**.
2. On the **Create PO** page, provide the requested information and click **OK**. Note the following:
   - **Vendor**: you must enter the vendor code. If you enter only the vendor name, you cannot create the order. You can search for the code or enter it manually.
   - **Ship To**: you must enter a location.
   - **Budget Check Code**: optional. Used as a reference when purchase orders are sent for budget authorization.

What's next

Submit the order for authorization.

Related tasks

Request order authorization

Create ad hoc purchase orders

Steps

1. On your to-do list, click **Create Ad Hoc PO**.
2. On the **Create PO** page, provide the requested information and click **OK**. Note the following:
   - **Vendor**: you must enter the vendor code. If you enter only the vendor name, you cannot create the order. You can search for the code or enter it manually.
3. (Optional) The **Promised By Date** date defaults to today's date. To change this, click **Edit Lines** and on the **Edit Order Lines** page, change the date and click **OK**.

What's next

Submit the order for authorization.

Related tasks

Request order authorization

Create purchase orders for stock requests

Steps

1. On your to-do list, **Stock Requests** tab, select a part or parts and click **Create PO for Request**.
2. On the **Create PO** page, provide the requested information and click **OK**. Note the following:

- **Vendor**: you must enter the vendor code. If you enter only the vendor name, you cannot create the order. You can search for the code or enter it manually.

What's next

Submit the order for authorization.

Related tasks

Request order authorization

Monitor and resolve order exceptions

If your organization uses the AeroBuy Parts Purchasing feature, vendors communicate purchase order changes (called exceptions) which you monitor and resolve on the Spec 2000 PO Exception Search page.

About this task

The PO Details page displays an exception counter and you cannot edit orders until all order exceptions are accepted or rejected. If you don't accept or reject within a specified period of time (usually 24 hours), your acceptance is assumed and the vendor begins to process your order.

Proposed changes from vendors are displayed in bold font on the **Spec 2000 PO Exception Search** page along with remarks if vendors provide them.

If you accept an exception, the purchase order is updated in CAMO. On the PO Details page, the PO line is updated. The order remains in AUTH status, so if there was a price change that requires authorization above your approval level, you need to request authorization.

When all order exceptions are dealt with, the exception counter disappears and the order is editable again.

To find exceptions that you're responsible for, you can filter your view of the page by selecting your name from the Buyers list or by selecting a specific vendor, purchase type, or purchase order. To find exceptions for orders that were automatically created as a result of a stock low action and that were auto-issued through AeroBuy, you can filter on purchase type combined with selecting MXPURCHASE from the Buyers list filter.

Steps

1. To go to the **Spec 2000 PO Exception Search** page:
   - On your role menu, click **Spec 2000 PO Exception Search** or,
   - On the **PO Details** page, **Order Information** area, **Order Exceptions (s) pending** field, click the red number (exception counter).
2. On the **Spec 2000 PO Exception Search** page, **Order Exceptions** tab, for each exception, click **Accept** or **Reject**.

If a vendor proposes an alternate part number for a line, the alternate part is marked with one of three symbols:

Symbol	Indicates	User Action
	The Part Number does not exist in CAMO.	Reject the exception. (The Accept button is disabled).
	The Part Number exists but does not belong to the same part group as the original part.	You cannot accept initially, but if the part is a valid alternate, you can add it to the part group and then accept.
	The Part Number exists and is listed in the same Part Group as the original part.	You can accept the exception.

3. In the **Confirmation Required** window, click **OK**.

   In AeroBuy, each line of an CAMO PO is a separate PO, so the confirmation cites the CAMO PO number plus a line number (for example: PO103-1, PO103-2, PO103-3).
4. If you accepted an order exception, authorize if required, and issue the PO.

The PO is the same now in CAMO and in the vendor's system -- unless you did not accept or reject an exception within the specified period of time. In this case an exception is still displayed on the PO Details page while the vendor may already be processing your order. If you intended to accept the order, then accept the exception in CAMO so that both systems are aligned. If you intended to reject the order, contact the vendor to resolve the discrepancy.

Edit and add to orders

Steps

1. On the order details page, **Order Lines** tab, click **Edit Lines**.
2. On the **Edit Order Lines** page, adjust the listed information as needed, and do one of the following:
   - To save your changes and continue on the **Edit Order Lines** page, click **Apply**.
   - To save your changes and close the **Edit Order Lines** page, click OK.

Add parts to orders

Steps

1. On the order details page, **Order Lines** tab, click **Add Part Line**.
2. On the **Add Part PO Line** page, provide the requested information and click **OK**.

Add non-part items to orders

Steps

1. On the order details page, **Order Lines** tab, click **Add Miscellaneous Line**.
2. On the **Add Miscellaneous Line** page, provide the requested information and click **OK**.

Add taxes to orders

Steps

1. On the order details page, **Order Lines** tab, click **Add/Remove Tax**.
2. On the **Modify Vendor Taxes** page, select a tax and click **Next**.
3. Review your changes and either click **Submit** or add customs or shipping charges.

Add customs and shipping charges

Steps

1. On the order details page, **Order Lines** tab, click **Add/Remove Charge**.
2. On the **Modify Vendor Charges** page, select a charge and click **Next**.
3. Review your changes and click **Submit**.

Exchange orders

You use exchange orders to return an unserviceable, repairable part to a vendor and receive a new, working part in return.

When a part request cannot be filled locally or be shipped from another location, you can repair an unserviceable part or purchase a new part to fill the demand. However, if you do not wish to purchase another part because it would increase the pool of repairable parts, and there is not enough time to repair an unserviceable part, you can obtain a new part using an exchange. In this case, the vendor sends you a new part in advance with the expectation that you will send the unserviceable part to the vendor after it is removed from the aircraft. The price of the exchange order takes into account the value of the part being exchanged.

You can create an exchange order from an existing purchase request or from an open part request. You can also create an ad hoc exchange order if there is no purchase request or part request initiated.

When you create an exchange order to receive a replacement part, you must also select the unserviceable inventory that you want to return to the vendor to complete the exchange. You can manually select the inventory to be returned to the vendor, or CAMO attempts to select the inventory automatically. When you install a serialized inventory item from an exchange order, CAMO searches for the unserviceable part that was removed on the same task or work package.

If an unserviceable part is found, CAMO marks that part as the inventory to be returned, and creates an outbound shipment.

You become the owner of newly received replacement parts when inspected, and the returned unserviceable part becomes owned by the vendor.

Note You cannot create an exchange order to exchange a kit. If you have received a kit that cannot be used, you can return the kit to the vendor, which automatically creates a new inbound shipment to receive a replacement kit.

Financial transactions for exchange orders

Normally, when you inspect inventory as serviceable, a INSP financial transaction is triggered, you own the inventory, and the total quantity and value increases. But for exchange orders of consumable class tracked and serialized parts, financial transactions aren't triggered until the exchange is complete. This is because both the financial transactions triggered for the outbound and inbound parts need to use the average unit price of the outgoing part – and the outbound shipment often happens after the inbound shipment is received. An exchange isn't complete until the inbound inventory is inspected as serviceable *and* the outbound shipment is sent.

At the moment when the exchange is complete, the financial transactions that apply to both parts in the exchange are triggered:

Inbound received part is inspected as serviceable

- An INSP transaction is triggered using the average unit price of the returned part (not the part just received) as the credit value. If an alternate part is received, the INSP financial transaction uses the the average unit price of the returned part (not the part just received) as the credit value.
- Total quantity for part increases and the total value for the part is updated. In the case of an alternate part, the quantity increases for the alternate part number and the total value for the alternate part is updated.
- The average unit price of the received part is re-calculated by dividing the new total value by the new total quantity.
- Ownership changes to local owner.

Outbound shipment sent

- An ARCHIVE transaction is triggered using the average unit price of the returned part as the debit value.
- Total quantity for part decreases and total value for the part is updated.
- There is no change to the average unit price for the part.
- Ownership changes to vendor.

The INSP and ARCHIVE financial transactions are not triggered for exchanges of rotable parts.

The financial transaction for batch is different. When batch parts are exchanged, the ownership change (CHGOWN) financial transaction is triggered and quantities, including for alternate parts are adjusted.

If you convert a purchase order to an exchange order after receiving and inspecting a part as serviceable, then a UNDOINSP financial transaction is triggered to reverse the INSP transaction that initially occurred. When the return part is selected for the exchange order and the outbound shipment is sent, both the inbound and outbound transactions are then triggered using the average unit price of the outbound part.

In a situation where you receive a part on an exchange order that you can't accept and you return that same part to the vendor (using the Return to Vendor button), the transactions that fire depend on whether the exchange is complete - in this case, on whether the outbound shipment for the exchange (not the Return to Vendor shipment) was sent.

If the exchange is not complete

No financial transactions have been triggered at this point. When you return the just received item, financial transactions and quantity updates are not triggered.

If the exchange is complete

If the received item was inspected as serviceable, then a RTVEN transaction is triggered for the received item which decreases the quantity by 1 or by the quantity sent out in a batch. This transaction uses the same average unit price as was used for the INSP transaction. When the Return to Vendor shipment is sent, ownership reverts to the vendor.

Later when another part is received to fulfill the exchange, an INSP transaction occurs using the average unit price of the part that was returned on the exchange order.

Create exchange orders for part requests

Steps

1. On your to-do list's **Open Part Requests** tab, select a request and click **Create Exchange Order for Request**.
2. On the **Create Exchange Order** page, provide the requested information and click **OK**. Note the following:
   - **Vendor**: you must enter the vendor code, not the vendor name. You can search or enter the code manually.

Submit the order for authorization.

Related tasks

Request order authorization

Create ad hoc exchange orders

Steps

1. On your to-do list, click **Create Exchange Order**.
2. On the **Create Exchange Order** page, provide the requested information and click **OK**. Note the following:
   - **Vendor**: you must enter the vendor code. If you enter only the vendor name, you cannot create the order. You can search for the code or enter it manually.

What's next

Submit the order for authorization.

Related tasks

Request order authorization

Create exchange returns

About this task

You can return outstanding exchange inventory to a vendor. To do this, you must select the inventory to return, and create a task to remove the item from inventory. You can then return the item to the vendor. On the Exchange Returns page, only order lines that don't have an outbound shipment yet or order lines with a pending outbound shipment status are displayed. For batch inventory, order lines appear on this page regardless of whether shipment has been received or return inventory has been selected.

Steps

1. On your to-do list, **Exchange Returns** tab, select an order line and click **Select Return Inventory**.
2. On the **Select Return Inventory** page, provide the requested information and click **OK**.
3. On your to-do list, **Exchange Returns** tab, select an order line and click **Create Removal Task for Return Inventory**.
4. On the confirmation page, click **Yes**.

Create exchange orders for unserviceable components

Steps

1. On your to-do list, **Unserviceable Staging** tab, select a part.
2. Click **Create Exchange Order**.
3. On the **Create Exchange Order** page, enter the exchange order details and click **OK**. Note the following:

- **Vendor**: you must enter the vendor code. If you enter only the vendor name, you cannot create the order. You can search for the code or enter it manually.

4. On the **Exchange Order Details** page, review the details of the exchange order, and adjust any values if necessary.

Consignment orders

Rather than purchasing spare parts and storing them in your warehouse until they are needed, you can arrange with a vendor to have a number of vendor-owned parts at your warehouse so that you can purchase them as they are used. This is known as consignment. Use a consignment order to obtain or replenish consignment inventory. If the consignment inventory is a non-repairable part, you purchase the part once it is issued using a purchase order. If the consignment inventory is a repairable part, you can exchange the broken part for a serviceable part using a consignment exchange order.

You can create a consignment order in two ways: by fulfilling a consignment stock request to replenish low stocks of consignment inventory, or by creating an ad hoc consignment order without having a request. When you create the order from a request, much of the information in the order is pre-populated according to the request.

You can create consignment orders for consumable consignment inventory from consignment stock requests. You can also create ad hoc consignment orders for initial provisioning of rotable consignment stock.

Create consignment orders

About this task

You create ad hoc consignment orders when there is no stock request. You can have multiple parts on the same consignment order; however, the order must be sent to a single vendor.

Steps

1. On your to-do list, click **Create Ad Hoc Consignment Order**.
2. On the **Create Consignment Order** page, provide the requested information and click **OK**. Note the following:
   - **Vendor**: you must enter the vendor code. If you enter only the vendor name, you cannot create the order. You can search for the code or enter it manually.

Create consignment exchange orders

About this task

If a serviceable consignment part becomes unserviceable, you can return it to the vendor in exchange for a serviceable consignment part.

After you create a consignment exchange order, you submit it for authorization.

Steps

1. On your to-do list, **To Be Returned Consignment** tab, select a part or parts and click **Create Consignment Exchange Order**.
2. On the Create Consignment Exchange Order page, provide the requested information and click OK.
3. To request order authorization, on the order details page, click **Request Authorization**.
4. On the **Request Authorization** page, select the **Authorization Flow** for the order type and click OK.
5. If prompted, enter your user name and password and click OK.

Borrow orders

When a part request for a part requirement on a task cannot be fulfilled locally, and if purchasing a new part or having a part repaired will not satisfy the part request in a timely manner, then you may decide to borrow a part (usually from another operator). You can install the borrowed part until a replacement is available. A planner can then schedule the removal of the borrowed part so that you can return the part to the lender as quickly as possible. The lender remains the owner of the borrowed inventory; You must return borrowed inventory to a vendor after a replacement for the borrowed inventory is available.

The fundamental difference between a borrow order and an exchange order is that with a borrow order, you must return the exact same item. In an exchange order, you must return the same part, but not the exact same item.

You can create a borrow order from an existing purchase request or an open part request; you can also create an ad hoc borrow order if there is no purchase or part request initiated. Borrow orders can only be created for serialized inventory—because the cost of borrowing inventory is expensive, it would be more economical to purchase non-serialized parts outright.

Note When creating a borrow order, you can select a borrow rate, which will calculate an additional fee to be added to the order depending on the defined rule. The two borrow rates defined as standard are StandardATABorrowRate and NA.

- StandardATABorrowRate is defined as (8% * Base Price) + 1%/day (days 1-10) + 2%/day (days 11-20) + 3%/day thereafter.
- NA will return 0 to allow manual additions of borrow rates later in the order process (by adding order lines with value = calculated borrow rate).

You can also create custom borrow rates.

Create borrow orders for part requests

Steps

1. On your to-do list, **Open Part Requests** tab, select a request and click **Create Borrow Order for Request**.
2. On the **Create Borrow Order** page, provide the requested information and click **OK**. Note the following:
   - **Vendor**: you must enter the vendor code. If you enter only the vendor name, you cannot create the order. You can search for the code or enter it manually.

   The **Borrow Order Details** page opens.

Submit the order for authorization.

Related tasks

Request order authorization

Create ad hoc borrow orders

Steps

1. On your to-do list, click **Create Borrow Order**.
2. On the **Create Borrow Order** page, provide the requested information and click **OK**. Note the following:
   - **Vendor**: you must enter the vendor code. If you enter only the vendor name, you cannot create the order. You can search for the code or enter it manually.
3. On the **Borrow Order Details** page, review the details.

What's next

Submit the order for authorization.

Related tasks

Request order authorization

Monitor borrowed inventory

About this task

From your to-do list, you can monitor all borrowed inventory items that are pending return.

Steps

1. On your to-do list, click the **Borrow Returns** tab.
2. Under **Serial No** column, click the serial number of the required order to review the inventory details.

Repair orders

To send unserviceable parts to a vendor for repair, you can create a repair order.

You can create a repair order directly from unserviceable inventory or through the scheduling of a work package for an inventory item. If the repair order is being created directly from unserviceable inventory, you can create a single repair order containing multiple inventory lines. If the repair order is created through the scheduling of a work package, it contains a single line for the inventory to be repaired. Once the repair order has been created, you can add inventory lines for parts requiring repair, provided the outbound shipment has not been sent. Inventory added to a multi-line repair order must meet the following conditions:

- Be from a single supply location.
- Belong to the Assembly, Track, Serial or Batch class
- Be of the REPREQ (Repair Required) inventory condition
- Be Uninstalled
- Not be locked

Work package relationship

When you create a repair order from unserviceable inventory or add an inventory line to an existing repair order, work packages are linked to the order lines as follows:

- If the selected inventory item is not associated with a work package, a new work package is created and scheduled, externally, based on the order line information.
- If the selected inventory item is associated with an existing unscheduled work package, the work package is linked to the repair order line and scheduled, externally, based on the order line information.
- If the selected inventory item is associated with multiple work packages, a new work package is created and scheduled, externally, based on the order line information.

However, if the selected inventory item has at least one internally or externally scheduled work package prior to creating the repair order, you cannot create a repair order for it.

When inventory lines are assigned to a repair order, the associated work package scheduling details will be updated.

Work package scheduling values based on repair order information

Work package column	Updated value
Broker	The broker specified for the repair order, if any.
Repair Vendor	The repair vendor specified for the repair order.
Repair Unit Price	The price specified on the contract with the repair vendor, if any. If no contracted price is defined, the value is zero.
Start Date	The date on which the inventory line is added to the repair order.
Scheduled End and Estimated End	These dates are calculated based on the number of days defined as the standard repair time specified on the repair vendor's contract after the scheduled start date. If a contracted standard repair time has not been set, theses date are set to the day after the scheduling date.
Promised By	This date is calculated based on the number of days defined as the standard repair time specified on the repair vendor's contract after the scheduled start date. If a contracted standard repair time has not been set, this date is set to the day after the scheduling date on the work package, but is not updated for the order line.
Charge To Account	The charge to account on order lines and work packages is the account specified for the repair order, on creation. When inventory lines are added to an existing repair order, the order lines and work packages inherit the charge to account specified on the last REPAIR type line in the order.

Work package column	Updated value
Purchasing Contact	The purchasing contact specified for the repair order, if any.
Return To Location	The return to location specified for the repair order.

When you reschedule a work package that resulted from a multi-lined repair order, you cannot change scheduling details such as the repair vendor, broker, purchasing contact, return to location, terms & conditions and transportation type on the work package. To modify these details, you can edit the repair order. For repair orders with a single line, you can change scheduling details either on the work package or repair order. However, once the order has been issued, the broker and vendor cannot be edited on either the repair order or the work package.

Work packages are started and have the status IN WORK when the outbound shipment is sent.

Add, edit and remove repair order lines

Once a repair order has been created, you can edit required information on a repair order line. Editing the Unit Price and Promised By date on the order line updates the associated work packages and shipments. If the Promised By date has not been specified, you must edit the line and select the Promised By date prior to issuing the order. The Promised By date for the entire repair order, which is displayed on the Details tab of the RO Details page, shows the furthest promised by date out of all the order lines in the repair order.

You can add and remove inventory lines from a repair order, provided that the outbound shipment for the order has not been sent. You can, however, add and remove miscellaneous lines regardless of the status of the outbound shipment. When a repair order line is removed, the repair order details available in the associated work package are removed as well. You can remove all but one inventory order line on a repair order. You can invalidate a repair order with one remaining line by canceling the order. Once a repair order has been canceled, you cannot reopen it.

Convert repair to exchange

You can convert a repair order line to an exchange order line to exchange a part that will not be repaired, for a different serviceable item. If all the repair order lines are converted to exchange order lines, the repair order is converted to an exchange order. Both exchange and repair order lines available in the repair order are shipped in the same shipment, so only a single outbound shipment is created for the entire order. You can receive inventory for repair and exchange in a single inbound shipment. You can also receive some or all of the exchange shipment lines in an inbound shipment prior to sending the outbound shipment.

Shipments

When the repair order is created, an outbound shipment is created with one shipment line for each order line of the repair or exchange. The outbound shipment type is SENDREP, unless the repair order is converted to an exchange order, in which case it is SENDXCHG. Shipment lines are added to a shipment with the Pending status, as new order lines are added to the repair order. Once the outbound shipment has been sent and is in the Complete status, you cannot add new order lines and shipment lines to the shipment.

An inbound shipment is created when the repair order is issued. The inbound shipment has one shipment line for each order line of repair or exchange. The inbound shipment type is REPAIR, unless the repair order is converted to an exchange order, in which case it is PURCHASE.

You can choose to receive only some shipment lines on a shipment which in turn creates a new inbound shipment to receive the remaining shipment lines. Likewise if you receive part of a batch, a new inbound pending shipment is created for the remaining batch quantity.

In the Inventory Receipts area of an RO Details page, the Received Qty column for a line, indicates the number of items that are financially received. Before any items for the line are inspected as serviceable, the full quantity is bracketed in red colour and zero items are counted as received. As the items are inspected as serviceable, the received quantity count is adjusted. (Each line also shows the numbers physically received in each shipment.)

You can also set the Estimated Arrival Date of the outbound shipment as required. In the case of an inbound shipment, the estimated arrival date is set to the earliest promised by date from among those defined on the order lines in the repair order.

Batch repairs

The batch number of inventory that's sent for repair is archived after you inspect the repaired inventory received on an inbound shipment associated with the repair order line. The received inventory is created with a new batch number because often, repairable batch inventory is returned in partial shipments over multiple days and CAMO needs to distinguish the returned portion from the unreturned portion. On the newly created inventory record, the Manufacture Date, OEM Lot Number, OEM Batch Number, Owner, and Owner Type are copied from sent inventory record associated with the repair order.

Before you can record the inspection of the repaired batch, CAMO prompts you to close the work package for the inventory that was sent for repair and provides a link to the work package.

If you receive part of a batch, you close the work package. Later, when you receive the remaining repaired batch items for the repair order line, CAMO verifies that the associated work package is complete and you are able to inspect the received items as serviceable.

If inspectors always view repair work packages before inspecting repaired items as serviceable, they won't see an open work package on the new batch, but can open the repair order for the new

batch, go to the Order Lines tab and click the Line Description which links to the work package for the batch that was sent for repair.

Related concepts

Vendor repairs
Exchanging unserviceable components

Related tasks

Create a repair order for unserviceable inventory
Add inventory line to repair order
Convert repair order line to exchange order line

Create a repair order for unserviceable inventory

You can create a repair order for unserviceable inventory, that needs to be repaired by a single repair vendor.

Steps

1. To find unserviceable inventory for which you want to create a repair order, do one of the following:
   - Go to the **Unserviceable Staging** tab and select inventory lines belonging to a single supply location.

     Note You can select the vendor for which the repair order should be created, if you select inventory with multiple vendors.

   - Go to the **Inventory Search** page, find the required inventory to repair and open in the **Inventory Details** page.
2. Click **Create Repair Order**.
3. On the **Create Repair Order** page, provide the requested information and click **OK**. Note the following:
   - **Order Number**: You can edit the auto-generated value, if required.
   - **Vendor**: Select the repair vendor authorized to do work on the repair order. If a repair vendor was selected previously on the **Unserviceable Staging** tab, it will be displayed here.
   - **Return to Location**: Select the location where the inventory will be returned upon completion of the order.
   - **Re-Expedite To Location:** Select the location which will serve as the Ship To location for the inbound shipment of the repair order.

Order lines are created for the selected inventory with the **Unit Price** and **Promised By Date** based on values from the repair vendor contract, if specified on the parts for the inventory. A scheduled work package is connected to each order line.

What's next

Add inventory line to repair order.

Related concepts

Repair orders

Related tasks

Add inventory line to repair order
Convert repair order line to exchange order line

Add inventory line to repair order

You can add additional inventory order lines to a repair order, to carry out the repairs on inventory items that will be issued to the same vendor and that will be shipped to the vendor on the same day.

About this task

On searching for inventory to be added to a repair order, the search defaults to the part number of the part for the last inventory item added on the repair order, and its supply location.

Steps

1. On the **Order Search** page, search for the repair order to which you want to add an inventory line.
2. Click the link for the repair order.
3. On the **RO Details** page, click **Add Inventory Lines**.
4. On the **Inventory Search** page, enter your search criteria and click **Search**.
5. From the search results, select the inventory line or lines to be added to the repair order.
6. Click **Assign Inventory Line**.

Order lines are created for the selected inventory and scheduled work packages are connected. The **Unit Price** and **Promised By Date** on the lines is based on values from the repair vendor contract, if specified on the parts for the inventory. The **Account** is the same as the account specified on creation of the repair order. To change the values on the order lines, click **Edit Lines** and on the **Edit Order Lines** page, change the required values and click **OK** .

Tip To remove an assigned order line, select the required line and click **Remove Lines**.

Note You can remove inventory lines from a repair order provided that the outbound shipment has not been sent. Only miscellaneous lines can be removed after this point. Once an inventory line is removed, the repair order details in the associated work package are removed and logged as a history note on the repair order and work package.

Related concepts

Repair orders

Related tasks

Create a repair order for unserviceable inventory

Changing order types

You can change a previously created order to another type of order.

You can convert an active borrow order to a purchase order if you decide to buy a part instead of borrowing one. Converting a borrow order to a purchase order may result in additional borrow charges if the borrowed item was received before the order was converted. This might affect the authorization level required for the new purchase order.

You can also convert an active borrow order to an exchange order if you want to exchange a part instead of borrowing.

To exchange a part instead of repair it, you can also convert the order line for the part's inventory from repair to exchange. If all order lines on the repair order are converted to exchange, the order will be converted to an exchange order. Once the order information has been modified, you can review the order, request authorization and approve it, accordingly.

Convert borrow orders to exchange orders

Steps

1. On your to-do list, **Borrow Returns** tab, in the **Order** column, click the order name.

2. On the **Borrow Order Details** page, **Order Lines** tab, select the order line and click **Convert Borrow to Exchange**.
3. On the **Convert Borrow to Exchange** page, provide the requested information and click **OK**.

Convert borrow orders to purchase orders

Steps

1. On your to-do list, **Borrow Returns** tab, in the **Order** column, click the order name.
2. On the **Borrow Order Details** page, **Order Lines** tab, select the order line and click **Convert Borrow to Purchase**.
3. On the **Convert Borrow to Purchase** page, provide the requested information and click **OK**.

Convert exchange orders to purchase orders

About this task

You can convert exchange orders to purchase orders if you do not want to return inventory to a vendor to complete an exchange. You can do this only if the inventory has not been returned to the vendor.

Steps

1. On your to-do list, **Exchange Returns** tab, in the **Order** column, click the order number.
2. On the **Exchange Order Details** page, **Order Lines** tab, select the order line and click **Convert Exchange to Purchase**.
3. On the **Convert Exchange to Purchase** page, provide the requested information and click **OK**.

Exchanging unserviceable components

You can exchange unserviceable components by creating an exchange order or by converting a repair order line to an exchange order line.

You can exchange unserviceable parts for serviceable parts in several ways. If a repair vendor cannot repair a part, but can exchange it for a different serviceable item, you can convert the order line for the part's inventory item on the repair order to an exchange order line. The inventory on the exchange order line will be listed as an inventory return.

The outbound shipment will contain inventory to be exchanged and may contain inventory to be repaired, if repair order lines exist on the repair order as well. The inbound shipment will contain the new inventory received and the inventory will be listed as received inventory on the repair order.

Alternatively, you might decide to exchange an unserviceable part before sending it to a repair vendor. You can do this by creating an exchange order. This is often done when you have an exchange relationship with a vendor.

Related concepts

Repair orders

Convert repair order line to exchange order line

You can convert a repair order line to an exchange order line to exchange unserviceable inventory.

Steps

1. On the **Unserviceable Staging** tab, in the **Order Number** column, click the order number.
2. On the **RO Details** page, select the repair order lines that you want to convert to exchange order lines and click **Convert Repair to Exchange**.
3. On the **Convert Repair to Exchange** page, provide the requested information and click **OK**.

The line price and account on the order line are updated with the exchange price and exchange charge to account. The link to the work package is removed from the order line and replaced by the part details, and the inventory is listed as inventory returns. If all repair order lines are converted to exchange order lines, the repair order wis converted to an exchange order.

What's next

After you create an exchange order or exchange order line, you must have the order authorized, and issue it to the vendor to be carried out.

Related concepts

Repair orders

Related tasks

Create a repair order for unserviceable inventory

Order authorization

Orders must be authorized by a person with the necessary authorization level before they can be issued to vendors. For urgent situations, you can bypass the authorization workflow by choosing an AOG override.

Authorization workflows and levels

Authorization workflows determine who must authorize orders. Each authorization workflow has an order type. Each authorization workflow can have multiple authorization levels. The levels might be defined numerically or as different roles such as purchasing agent, purchasing manager,

finance manager, with each level having an approval limit in dollar value. For some workflows, authorization might be required from more than one level.

Sample authorization workflow

Authorization workflow	Order type	Authorization level	Limit price
PURCHASE (Purchase authorization)	PURCHASE	Purchasing agent	24,999
		Supervisor	49,999
		Manager	99,999
		Director	499,999
		Vice-president	999,999,999

After you create an order, if you have the necessary authorization level for the value of the order, you can authorize the order and the authorization status changes to APPROVED. You can also authorize and issue an order at the same time, if you have the necessary authorization level for the value of the order. If you don't have the necessary authorization level, you request authorization. The order is approved up to your authorization level and the request is submitted to a person with the next level and so on until the order is approved by a person with the necessary authorization level for the value of the order. You can see the authorization history on the Order Details page, Authorization tab.

If an order will pass through multiple levels, you can shorten the process by contacting someone with the necessary level. It is sufficient for only the person with the necessary authorization level to authorize the order. You can see the necessary level when you request authorization.

When you request authorization for an order, you select the appropriate order authorization flow. Different workflows require different levels of authorization. The authorization flows are defined by your organization and loaded into the database using the Baseline Loader or insertion scripts.

Depending how CAMO is configured, if authorized orders are edited, they might require authorization again or they might require authorization again only if the price change is beyond the specified tolerance.

Administrators can assign authorization levels to users. For more information see the CAMO Administration Guide.

Authorization status

You can track the authorization progress of an order by checking its authorization status. Orders can have the following authorization statuses:

- PENDING: Authorization hasn't been requested.

- REQUESTED: Authorization was requested.
- APPROVED: The order is authorized and can be issued.
- REJECTED: The authorizing authority did not approve the order. It must be revised and submitted for authorization again.
- BYPASSED: Orders can have the BYPASSED status in two workflows:
  - Parts are urgently needed for an AOG priority request and a user with permissions clicks the AOG Authorization Override button and circumvents the normal authorization process.
  - Orders are automatically created and issued as a result of stock low actions.
- OVERRIDDEN: If you have a budget approval integration with an external system and the budget for the order is rejected, user with permissions can override the budget rejection and the order authorization status is OVERRIDDEN.

Authorizing orders

You can authorize purchase, consignment, repair or exchange orders that are sent to you. If the budget check is active, you cannot authorize an order until the budget has been approved. Orders that have not been approved by budget do not appear on the Authorization Required Orders tab, but you can find these in an order search.

Orders that require authorization are displayed on the To-Do List, Authorization Required Orders tab. When the **Only show orders that require your attention** check box is selected, authorizations that have not been authorized by lower levels first or that do not require authorization by the current user are not displayed.

You can authorize orders using the Authorize Order button on this tab or alternatively authorize and issue an order using the Authorize and Issue button, provided that in the latter case you have the permission to issue orders as well.

Purchase orders that are automatically created and issued as a result of POREQ or SHIPREQ stock low actions are automatically authorized by the system user MXPURCHASE.

Request order authorization

To get an order authorized so that you can issue it to a vendor, you request authorization.

Steps

1. On the order details page, click **Request Authorization**.
2. On the **Request Authorization** page, in the **Authorization Flow** drop down, select the appropriate workflow for the order type and click **OK**.
3. If prompted, enter your user name and password and click **OK**.
   The order details page opens.

Override order authorization for AOG

Orders must be authorized by specified managers before they can be issued. However, if a part is needed urgently, or if the manager required to authorize an order is not available, you can override the order authorization process using the AOG override.

About this task

If you do not have the necessary authorization level for an order, you can override order authorization for AOG to bypass the authorization workflow for an order and any budget checks that are required.

Steps

1. On your to-do list, **Authorization Required Orders** tab, in the **PO** column, click the order number.
2. On the order details page, review the order and click **AOG Authorization Override**.
3. On the **AOG Authorization Override** page, enter a note and click OK.
4. If prompted, enter your password and click OK.

Authorize orders

You can authorize orders for which you have the necessary authorization level.

Prerequisite

The order has been approved by the budget.

Steps

1. On your to-do list, **Authorization Required Orders** tab, in the **Orders** column, click the order number.
2. On the order details page, review the order and click **Authorize Order**.
3. In the **Authorization Information** box, enter a note and click **OK**.
4. If prompted, enter your password and click **OK**.

> **Tip** You can authorize an order directly from your to-do list by selecting the order, and clicking **Authorize Order**.

> **Note** You can authorize and issue an order at the same time by clicking Authorize and Issue which is also available on the **Authorization Required Orders** tab, if you have the necessary authorization level and permission to issue orders enabled as well.

Reject requests for order authorization

You can reject authorization of purchase, consignment, or exchange orders that are sent to you. If appropriate, the purchasing agent can edit the order and request authorization again.

Steps

1. On your to-do list, **Authorization Required Orders** tab, in the **Orders** column, click the order number.
2. On the order details page, review the contents of the order and click **Reject Order**.
3. (Optional) On the **Reject Order** page, enter a note and click **OK**.
4. If prompted, enter your password and click **OK**.
   On the **PO Details** page, the **Order Status** changes to OPEN and **Authorization Status** changes to Reject. The rejection is recorded on the PO Details, History tab.

   There is no active authorization level for the order. To see a record of this transaction, on the PO Details page, **Authorization** tab, click the **Include Historical Authorizations** check box.

Re-open canceled or closed orders

About this task

You can re-open canceled or closed orders if you have been granted permission. When you re-open an order, it will be updated to Open status and may have to be re-issued.

Steps

1. On the order details page, click **Re-Open Order**.
2. If prompted, enter your password and click OK.
3. On the **Confirm** page, click **Yes**.

   Once you re-open an order, you can edit the order, if required, and resubmit for approval.

Issue orders

After an order is authorized, you must issue the order, and send it to the vendor for completion.

About this task

If your organization uses integration APIs to communication with Spec 2000 vendors, order messages are sent automatically when you issue an order.

Steps

1. On your to-do list, **My Open Orders** tab, under the **PO** column, click the required order number.

> **Note** The Order Number is editable until you issue the order.

2. On the order details page, click **Issue Order**.
3. On the **Issue** page, enter a note and click **OK** or **OK and Print**.

> **Note** You can authorize and issue an order at the same time, if you have the necessary authorization level and permissions enabled. If you edit an order line such that the resulting price of the order is less than the limit price for your authorization level, the order will remain in the Authorized status. Conversely, if the resulting price of order is more than the limit for which you have been authorized, the order goes back to the Open status.

After an order is issued, you can monitor its status on your to-do list's My Open Orders tab.

If your organization uses AeroBuy Parts Purchasing for issuing purchase orders to Spec 2000 vendors, if you change part lines, you must issue the PO again so the updates are communicated to the vendor.

Authorize and issue orders concurrently

You can authorize and issue an order at the same time, given you have the necessary authorization level for the order and permissions to do so.

Steps

1. On the order details page, click **Authorize and Issue**.
2. On the **Authorize and Issue** page, review the order information and enter a note, if required.
3. Click **OK** to authorize and issue the order or **OK and Print** to authorize, issue and print the order.
4. If prompted, enter your user name and password and click **OK**

Override authorization and issue order for AOG

You can override the authorization process and issue the order at the same time, for AOG critical orders.

About this task

If you do not have the necessary authorization level for an order but have permission to override authorization and issue orders for AOG, you can bypass the authorization workflow and any budget checks that may be required for an order.

The order status will be Issued and the authorization status and budget check status will be Bypassed.

Steps

1. On the order details page, click **AOG Authorization Override and Issue**.
2. On the **AOG Authorization Override and Issue** page, review the order information and enter a note, if required.
3. Click **OK** to override authorization and issue the order, or click **OK and Print** to override authorization, issue and print the order.
4. If prompted, enter your user name and password and click **OK**.

Cancel orders

You can cancel an order if you decide that ordered parts are no longer needed. When you cancel an order, its status changes to Cancel, and its record remains in CAMO.

About this task

You can't cancel a purchase, repair, or exchange order if any shipments for the order are in transit (IN TRANS status), either inbound or outbound.

Steps

1. On the order details page, click **Cancel Order**.
2. On the **Cancel Order** page, in the **Note** field, describe the reason for canceling the order.
3. Click **OK**.

Invoices

Although invoices are not paid in CAMO, invoice records must be created so that orders can be closed. When an invoice is validated for payment, CAMO closes the order. Invoices may be created automatically or you can create them manually.

Typically when you create an invoice from a purchase order, the invoice lines are automatically mapped to the purchase order lines. In some cases, including when you try to validate an invoice and receive an error message that an invoice line isn't mapped to an order line, you must manually map invoice lines to order lines.

Before your finance department pays an invoice, you must validate the invoice for payment to ensure that the part number, price, and quantity match the invoice, the material ordered, and the material received. This validation is called three-way matching and it can be done in CAMO or an external system. The Finance API can be used to communicate between CAMO and external systems. You can also configure the MX_CORE_VALIDATE_OPEN_INVOICE job to validate invoices and mark them for payment (see the CAMO Administration Guide).

The following scenarios describe possible invoice creation and three-way matching processes:

Invoices manually created in CAMO

When you receive invoices from vendors, you create invoices manually in CAMO. If the invoice includes multiple purchase orders, you map the invoice lines to their corresponding order lines (for both part and non-part lines). To perform the three-way matching, you validate the invoice for payment, resolve any discrepancies, and mark the invoice for payment. Matching and invoice information is then communicated to an external financial system through the Maintenix Finance API (or an alternative mechanism). Once the invoice is paid, the external system sends a message to mark the invoice as paid in CAMO.

Invoices created and matched in an external financial system

Invoices can be created and matched in an external financial system. Invoice information is then communicated to CAMO through the Maintenix Finance API and a duplicate invoice with a TOBEPAID status is created in CAMO. (This status indicates that the invoice is validated). Once the invoice is paid, the external system sends a message to mark the invoice as paid in CAMO.

For more information, see the *Maintenix Finance API Guide*.

Invoices created through the CAMO AeroBuy Parts Purchasing feature

Through the CAMO AeroBuy Parts Purchasing feature, invoices are received electronically from vendors and automatically created in CAMO. To perform the three-way matching, you validate the invoice for payment, resolve any discrepancies, and mark the invoice for payment. Invoice information is then communicated to an external financial system through the Maintenix Finance API (or an alternative mechanism). Once the invoice is paid, the external system sends a message to mark the invoice as paid in CAMO. Note that if an CAMO PO has multiple lines, there is one AeroBuy PO and one corresponding invoice for each line. Therefore an AeroBuy invoice that's validated for payment only closes an CAMO PO if it is for the remaining quantity of the whole order which has not yet been paid for.

For more information, see the *Maintenix AeroBuy API Guide*.

Invoices can be created manually or through the AeroBuy API for orders that were issued at least once and that have a status of OPEN, AUTH, ISSUED, ACKNOWLEDGED, PARTIAL, or RECEIVED. When invoices are created through the Finance API, they are created as validated and therefore cannot be created for orders with an OPEN status. You can create invoice records for the following order types:

- Purchase orders
- Borrow orders
- Exchange orders
- Consignment orders
- Repair orders
- Mixed orders (orders containing lines from different order types)

You cannot create invoice records for consignment exchange orders.

Vendors reuse invoice numbers, so invoices with the same invoice number and vendor code can be manually or automatically created in CAMO if the existing invoices have a PAID or CANCEL status. If more than one invoice in the system has the same vendor code and invoice number, only one can have a TOBEPAID status.

Configuration options for payment validation

Procurement departments can define limits on the approval of invoice payments using a variety of configuration parameters. As long as the price on the invoice and the order match within the allowable limits, the invoice can be validated for payment. You can set both a percentage difference tolerance value and a fixed dollar difference value and the two settings work together. You might want to set both percentage and fixed difference values because 2% of a $100,000 order is a very different amount of money than 2% of a $1,000 order.

Here's an example of how the tolerances work together: You set a 2% tolerance limit and $200 fixed dollar tolerance limit with the following results on a purchase order line for $20,000:

- A corresponding invoice is received for $20,100. The $100 price difference for the line is within both the percentage and the fixed dollar difference tolerance. The invoice line can be three-way matched and the invoice can be validated for payment.
- A corresponding invoice is received for $20,250. The $250 price difference for the line is within the percentage difference tolerance but is not within the fixed dollar difference tolerance. The invoice line cannot be three-way matched and the invoice cannot be validated for payment. The invoice agent must determine how to resolve this discrepancy.

When invoices are validated for payment, CAMO checks the following settings and provides warning or error messages when appropriate.

- INVOICE_ALLOW_OVERINV: Determines whether an invoice can be validated when a unit price on an invoice is greater or less than a unit price on the originating order. If TRUE, the price difference between the invoice and the order must be within the tolerance limits set for the INVOICE_TOLERANCE_PCT and INVOICE_TOLERANCE_FIXED parameters.
- INVOICE_TOLERANCE_PCT: The maximum percentage allowed for the difference between the price on a purchase order and the price on the associated invoice. If the price on the invoice exceeds the price on the purchase order by this percentage or less, users can validate the invoice for payment, when INVOICE_ALLOW_OVERINV is set to TRUE.
- INVOICE_TOLERANCE_FIXED: Acceptable fixed dollar difference between the invoice price and the price on the originating order. When INVOICE_ALLOW_OVERINV is set to TRUE, if the price on the invoice exceeds the price on the order by the fixed tolerance value or less, users can validate the invoice for payment, .
- INVOICE_ALLOW_UNMAPPED_LINES: Depending on the OK, Warn, or Error value, an invoice that includes a miscellaneous line that isn't in the originating order (and is unmapped to an order line) can or cannot be validated for payment. This setting does not affect part lines in an invoice, only miscellaneous lines).

- INVOICE_ALLOW_OVERINV_ISSUE Depending on the WARN or ERROR value, users can validate an invoice for payment when the invoice is for a consignment order and specifies a quantity of items greater than the quantity that was issued for maintenance.

Invoice lines and order lines

Invoices contain invoice lines, which represent a part or service delivered in response to one or more orders. In most cases, invoice lines are automatically mapped to order lines, but if you create an invoice without specifying an order number or for miscellaneous lines in an AeroBuy invoice, you have to manually map invoice lines to order lines.

There are two types of purchase order invoice lines: part PO invoice lines and miscellaneous PO invoice lines.

- Part PO invoice lines contain information about parts.
- Miscellaneous PO invoice lines contain information about other purchased items, such as borrow charges, customs, or other services.

The following examples show some of the possible relationships between invoice lines and order lines. You can map one invoice line to one order line, one invoice line to two or more order lines, or you can map two or more invoice lines to one order line.

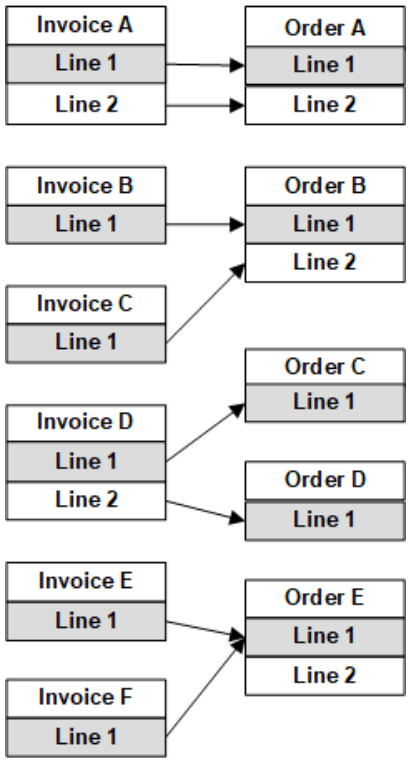

Examples of how invoices map to purchase orders

If you use the AeroBuy Parts Purchasing feature, each line in an CAMO purchase order is a separate purchase order in AeroBuy. The separate POs are numbered with the original PO

number appended with a hyphen and the line number. Each AeroBuy purchase order has a separate invoice.

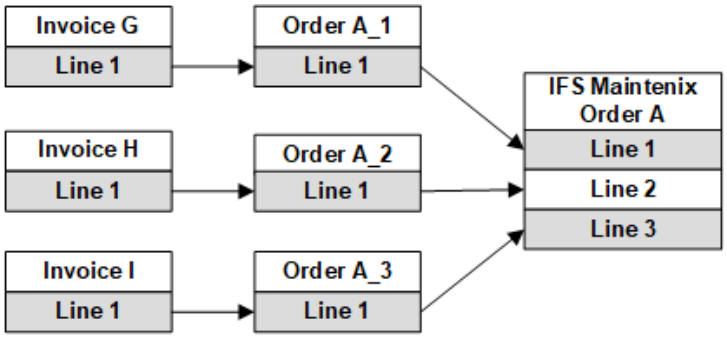

How AeroBuy invoices map to purchase orders

Create invoices

You can manually create invoices in CAMO.

Steps

1. On your to-do list, **My Open PO Invoices** tab, click **Create Invoice**.
2. On the **Create Invoice** page, provide the requested information and click **OK**.
3. On the **PO Invoice Details** page, click **Add Part PO Invoice Line**.
4. On the **Part Search** page, enter your search criteria and click **Search**.
5. From the search results, select a part and click **Assign Part**.
6. On the **Add Part PO Invoice Line** page, provide the requested information and click **OK**.

> **Note** You must add every part number for the invoice. This is done automatically if you selected the purchase order when creating the invoice.

7. If you want to add non-part items to the invoice, click **Add Miscellaneous PO Invoice Line** on the **PO Invoice Details** page.
8. On the **Add Miscellaneous PO Invoice Line** page, provide the requested information and click **OK**.

> **Note** You must list every non-part line from the invoice. This is done automatically if you select the purchase order when creating the invoice.

Match invoices to orders

Steps

1. On the **PO Invoice Details** page, select an invoice line, and click **Map PO Invoice Line to PO Line**.
2. On the **Map PO Invoice Line** page, review the list of purchase orders, and select the order line that corresponds to the invoice line and then click **OK**.
3. On the **PO Invoice Details** page, if the mapped order is a consignment order, verify that the **Consignment** check box on the invoice line is selected.

Manually map miscellaneous lines on AeroBuy-created invoices

Invoices that are created through the Maintenix AeroBuy API are automatically mapped to purchase order lines, but if the invoice contains miscellaneous lines, you must update the Account, and manually map the lines before you can validate the invoice for payment.

About this task

Miscellaneous invoice lines are automatically created if taxes or charges are provided by the vendor and they are created with an Account of VOID. There is one invoice line for the Total Tax Amount, and one invoice line for the Total Other Charge Amount. The Total Tax Amount line displays the sum of all the Sales and Value Added Taxes provided by the vendor for a given line. The Total Other Charge Amount displays the sum of all other charges provided by the vendor for a line. You can see an itemized breakdown of taxes and charges on the Invoice Details tab.

Note that while you can edit the account, most fields on AeroBuy API-created invoices are not editable (and most buttons are disabled or hidden). If there are errors on the invoice, contact the vendor and request an updated invoice. For more information, see the *Maintenix AeroBuy API Guide.*

Steps

1. To find an invoice, do one of the following:
   - On your **To Do List**, **My Open Invoices** tab, click the link for an invoice.
   - From your role menu, click **PO Invoice Search**, click **Search**, and then click the link for an invoice.
2. On the **PO Invoice Details** page, **PO Invoice Lines** tab, click **Edit PO Invoice Lines**.
3. On the **Edit PO Invoice Lines** page, in the **Account** column for the line, enter an account and click **OK**.
4. Match each miscellaneous line.

   If there's no matching order line, go to the order, add the miscellaneous line to the order, and assign an account to the line. Return to the invoice, and click **Map PO Invoice Line to PO Line** again. Order lines only appear in the mapping search if they have the same **Charge**

Account as the **Invoice** line you are trying to map. The name of the line is irrelevant when it comes to mapping invoice lines with order lines.

When all the lines are matched, you can validate the invoice for payment. If the invoice and the PO don't match and there are remaining errors, you can edit the PO or contact the vendor to request an update to the invoice.

If you mapped the miscellaneous lines, but then the vendor sends an invoice update, the miscellaneous line accounts are reset to VOID and must be updated and mapped again.

Related tasks

Coordinate between invoice and order agents to validate invoices

Match invoices to orders

Coordinate between invoice and order agents to validate invoices

If there are matching errors when you attempt to validate an AeroBuy-created invoice for payment accounts payable accountants may need to coordinate with purchasing agents to resolve the issues. In CAMO, you can pass invoices back and forth for action by the appropriate person.

About this task

In some organizations accounts payable agents may contact vendors when invoices don't match purchase orders, while in other organizations, purchasing agents contact vendors to resolve discrepancies.

To assign the invoice to a purchasing agent or back to an accounts payable accountant, use the following steps:

Steps

1. On the **PO Invoice Details** page, **Details** tab, **Details** area, click .
2. On the **Edit Invoice** page, in the **Order Invoice Contact** field, enter the name of the person you want to assign to the invoice.
3. Click **OK**.
   The invoice is listed on the **My Open Invoices** tab of the assigned user. When the discrepancy is resolved, the assigned user re-assigns the invoice to the appropriate person to 3-way match the invoice and close the purchase order.

Mark invoices for payment

After you ensure that the part number, price, and quantity match on the order, shipment received, and the invoice, you validate the invoice and mark it for payment.

Steps

1. On the **PO Invoice Details** page, click **Validate For Payment**.

2. Review the validation summary.

> **Note** If an invoice line is mapped to a consignment order line, the validation compares the quantity issued. If the invoice quantity is greater than the quantity issued, a warning or an error is generated, based on your CAMO configuration.

3. If everything is valid, click **Mark for Payment**.

Managing vendors

Create vendors

About this task

In CAMO, you can create all of the vendors with whom you interact. When creating purchase orders, exchange orders, borrow orders, and external repair orders, you select from the vendors that you have created in your system.

When you create a vendor, CAMO automatically creates a vendor location. This enables you to move inventory to or from a vendor within CAMO.

Steps

1. On the **Vendor Search** page, click **Create Vendor**.
2. On the **Create Vendor** page, provide the requested information, paying special attention to the following field:
   - **Code:** Enter a unique code for the vendor, or click **Generate Vendor Code** to create one automatically.
3. Click **OK**.

Edit vendors

About this task

After you have created a vendor, you can edit the vendor's details, including the shipping address, contract information, and notes to material receivers.

Steps

1. Select the **Vendor Search** or **Vendor Search By Type** menu item.
2. On the **Vendor Search** page, enter your search criteria and click **Search**.
3. On the **Vendor Details** page, **Details** tab, **Details** area, click **Edit Vendor** .
4. On the **Edit Vendor** page, update the vendor details and click **OK**.

Assign vendors to organizations

You might want to assign a vendor to an organization if your system includes several organizations, and each organization uses different vendors.

Steps

Do one of the following:

- On the **Organization** page, **Vendor List** tab, click **Assign Vendor**.
- On the **Vendor Search** page, enter your search criteria and click **Search**. Then select one or more vendors and click **Assign Vendor**.

Add accounts to vendors

About this task

Add the accounts you have with a vendor.

Steps

1. Select the **Vendor Search** or **Vendor Search By Type** menu item.
2. On the **Vendor Search** page, enter your search criteria and click **Search**.
3. On the **Vendor Details** page, **Details** tab, **Accounts** area, click **Add Account** .
4. On the **Add Account** page, provide the requested information and click **OK**.

Add links to vendor websites

About this task

You can add links to the vendor's website.

Steps

1. On the **Vendor Details** page, **Details** tab, **Technical References** area, click **Add Technical Reference** .
2. On the **Add Technical Reference** page, provide the requested information, paying special attention to the following fields:
   - **Link**: Enter the link for the vendor's website, including the `http://` prefix.
3. Click **OK**.

Attach vendor certification documents

About this task

You can attach vendor certification documents to the vendor details.

Steps

1. Scan the vendor's certification documents.
2. On the **Vendor Details** page, **Details** tab, **Attachments** areas, click **Add Attachment** .
3. On the **Add Attachment** page, in the **Attachment** area, drag and drop the file or click to select the scanned document from your computer.
4. Enter the requested information and click **OK** or to add another attachment, click **OK and Repeat**.

Assign airports to vendors

About this task

You can assign to a vendor the specific aiports that it services. The primary airport that a vendor services is the vendor's default airport, but a vendor can service multiple airports. CAMO automatically sets the first airport assigned to a vendor as the default airport. You can change the default airport at any time.

Steps

1. Select the **Vendor Search** or **Vendor Search By Type** menu item.
2. On the **Vendor Search** page, enter your search criteria and click **Search**.
3. On the **Vendor Details** page, **Details** tab, **Airports** area, click **Add Airport**.
4. On the **Location Search** page, enter your search criteria and click **Search**.
5. Select the airport or airports and click **Assign Location**.
6. On the **Vendor Details** page, **Details** tab, **Airports** area, select an airport.
7. Click **Mark Airport as Default** .
8. On the **Confirm** page, click **Yes**.

Add taxes to a vendor

About this task

You can create taxes, and assign them to vendors. To do so, you must have the necessary permission settings enabled.

After a tax is assigned to a vendor, it applies by default to orders, requests for quotes, and invoices created for that vendor.

Steps

1. On your to-do list, click **Manage Taxes**.
2. On the **Manage Taxes** page, click **Create New**.
3. On the **Create New Tax** page, provide the requested information, paying special attention to the following fields:

- **Rate**: Type the tax rate that will be used as the default tax rate. The tax rate can be altered manually when creating orders. If you do not enter a tax rate, users must manually enter the tax rate when creating orders.
- **Charge To**: Select the inventory account option if the tax is to be added to the cost of the inventory (AUP). If the tax must be applied to an expense account, and recorded as a separate financial transaction, select the expense account to be charged.
- **Compound**: Select whether the tax is compound. Non-compound taxes are calculated against the base amount. Compound taxes are calculated against the sum of the base price and any non-compound taxes. All non-compounded taxes are applied directly to the base price before compounded taxes are calculated.

4. Click **Next**.
5. Review your work, and click **Next**.
6. Select the **Vendor Search** or **Vendor Search By Type** menu item.
7. On the **Vendor Search** page, enter your search criteria and click **Search**.
8. On the **Vendor Details** page, **Taxes** tab, click **Edit Vendor Tax**.
9. On the **Modify Vendor Taxes** page, select a tax or taxes and click **Next**.
10. Review your work, and click **Submit**.

Edit vendor taxes

About this task

You can edit, archive, and restore vendor taxes. You can also view a log of all changes that have been made to taxes.

Steps

1. On your to-do list, click **Manage Taxes**.
2. On the **Manage Taxes** page, select a tax and click **Modify**.
3. On the **Modify Tax** page, change the tax information as necessary, and click **Next**.
4. Review your work, and click **Next**.

> **Note** If you edit a tax rate that is assigned to vendors and is used in existing orders, requests for quotes, or invoices, all orders that have not yet been issued have their tax rates updated to the new rate. Any order that is currently issued, or has been issued previously, is not affected by the tax rate change.

Archive taxes

Steps

1. On your to-do list, click **Manage Taxes**.
2. On the **Manage Taxes** page, select a tax and click **Archive**.
3. On the **Archive Tax** page, review the tax details and click **Next**.

Restore archived taxes

Steps

1. On your to-do list, click **Manage Taxes**.
2. On the **Manage Taxes** page, click **Create New**.
3. On the **Create New Tax** page, enter the name of the previously archived tax.
4. Provide the requested information. If you leave a field empty, the archived information is retrieved. If you enter information in a field, the archived information is overwritten.
5. Click **Next**.
6. Review your work, and click **Next**.

View history of tax modifications

Steps

1. On your to-do list, click **Manage Taxes**.
2. On the **Manage Taxes** page, click **History**.

Create charges

You can create charges and assign them to vendors. After a charge is assigned to a vendor, it applies by default to orders, requests for quotes, and invoices created for that vendor.

About this task

When creating charges, you do not specify a default amount for the charge. When an order, invoice, or RFQ is created, the applicable charge is added, but the amount is left empty. You must specify the amount of the charge by editing the order, invoice or RFQ line.

Steps

1. On your to-do list, click **Manage Charges**.
2. On the **Manage Charges** page, click **Create New**.
3. On the **Create New Charge** page, provide the required information. Note the following:

- **Name**: The name of the charge. The name must not contain any special characters including blank spaces. Allowed symbols are numbers, letters, _ (underscore) and - (hyphen).
- **Charge To**: Select the inventory account option if the charge is to be added to the cost of the inventory (AUP). If the charge must be applied to an expense account, and recorded as a separate financial transaction, select the expense account to be charged.
- **Recoverable**: Select Yes or No depending on if you want to have the charge amount reimbursed later or not.

4. Click **Next**.
5. Review your work, and click **Next**.

The charge is created and can now be added to a vendor.

Add charges to vendors

Prerequisite

The charge has been created.

Steps

1. Find a vendor by selecting the **Vendor Search** or **Vendor Search By Type** menu item.
2. On the **Vendor Search** page, enter your search criteria and click **Search**.
3. On the **Vendor Details** page, **Charges** tab, click **Edit Vendor Charge**.
4. On the **Modify Vendor Charges** page, select a vendor and an order type, and click **Next**.
5. Select a charge or charges and click **Next**.
6. Review your work and click **Submit**.

Edit vendor charges

About this task

You can edit, archive, and restore vendor charges. To perform any of these actions, you must have the necessary permission settings enabled.

You can also view a log of all changes that have been made to charges.

Steps

1. On your to-do list, click **Manage Charges**.
2. On the **Manage Charges** page, select a charge, and click **Modify**.
3. On the **Modify Charge** page, change the charge information as necessary and click Next.
4. Review your work, and click **Next**.
5. On your to-do list, click **Manage Charges**.

6. On the **Manage Charges** page, select a charge and click **Archive**.
7. On the **Archive Charge** page, review the charge details and click **Next**.
8. On your to-do list, click **Manage Charges**.
9. On the **Manage Charges** page, click **Create New**.
10. On the **Create New Charge** page, enter the name of the previously archived charge.
11. Enter the requested information. If you leave a field empty, the archived information is retrieved. If you enter information in a field, the archived information is overwritten.
12. Click **Next**.
13. Review your work, and click **Next**.
14. On your to-do list, click **Manage Charges**.
15. On the **Manage Charge** page, click **History**.

Add purchase vendor prices for parts

About this task

You can record the price charged by a vendor to supply a particular part.

Steps

1. On the **Part Details** page, **Vendors** tab, **Purchase** sub-tab, select a vendor, and click **View Part Price List**.
2. On the **Vendor Part Price Details** page, click **Add Price**.
3. On the **Add Part Price** page, provide the requested information and click **Next**.
4. On the **Review Part Price** page, click **Submit**.
5. On the **Vendor Part Price Details** page, click **OK**.

Add purchase vendors for parts

About this task

You can record the vendors that sell a particular part, and mark one vendor as the preferred vendor for that part.

Steps

1. On the **Part Details** page, **Vendors** tab, **Purchase** sub-tab, click **Assign Purchase Vendor**.
2. On the **Add Purchase Vendor** page, click **Select Vendor** .
3. On the **Vendor Search** page, enter your search criteria and click **Search**.
4. From the search results, select a vendor and click **Assign Vendor**.
5. On the **Add Purchase Vendor** page, click **OK**.
6. On the **Part Details** page, **Vendors** tab, **Purchase** sub-tab, select a vendor.

7. Click **Set As Preferred Vendor**.

Vendor approval status

As you track and review the performance of a vendor, you can log it as one of the following vendor approval statuses:

- Unapproved: The vendor's performance is unacceptable. Purchase orders cannot be issued for unapproved vendors.
- Approved: The vendor's performance is deemed acceptable. Approved vendors are available as suppliers.
- Approved With Warning: The vendor's performance is dubious. The vendor is an acceptable supplier, but restrictions or limitations exist.

Vendor approval is recorded for each organization. If you have several organizations that deal with the same vendor, that vendor can have a different status with each organization: one organization may approve the vendor because it is satisfied with the vendor's service, while another organization may be less satisfied, and grant the vendor approved with Warning status.

You set vendor approval status for each type of order you place with a vendor, and for each type of service that the vendor provides (inspection, modification, or overhaul). Therefore, it is possible to approve a vendor for inspection work, but not for overhaul work, or to approve a vendor for purchases, but not for borrow orders.

For each status value, you set an expiry date. After the expiry date, the vendor is no longer approved, and CAMO users can no longer place orders of the types that have expired with that vendor.

Approve vendors

About this task

You can approve vendors to provide orders and services to of your organizations. A vendor that serves several organizations can have different approvals for each organization.

The following steps allow you to approve vendors unconditionally.

Steps

1. On the **Organization** page, **Vendor List** tab, click **Search**.
2. From the search results, select a vendor, and click **Edit Approval Details**.
3. On the **Approval Details** page, **Order Types** area, select an order or orders and click **Approve Vendor**.
4. On the **Edit Approval Status** page, enter the **Approval Expiry** date and click **OK**.
5. On the **Approval Details** page, **Service Types** area, select a service or services and click **Approve Vendor**.

6. On the **Edit Approval Status** page, enter the **Approval Expiry** date and click **OK**.

Approve vendors with restrictions

About this task

You can add a warning note for anyone creating orders for a vendor when that vendor has certain restrictions.

Steps

1. On the **Organization** Details page, **Vendor List** tab, click **Search**.
2. From the search results, select a vendor and click **Edit Approval Details**.
3. On the **Approval Details** page, **Order Types** area, click **Approve with Warning**.
4. On the **Edit Approval Status** page, provide the following information:
   - **Approval Expiry**: The date on which the vendor's approval expires.
   - **Warning Note**: A description of restrictions placed on the vendor.
5. Click **OK**.
6. On the **Approval Details** page, **Service Types** area, click **Approve with Warning**.
7. On the **Edit Approval Status** page, provide the requested information and click **OK**.

Unapprove vendors

About this task

If an inventory or service vendor's performance is deemed unacceptable, you can mark the vendor as unapproved.

Steps

1. On the **Organization Details** page, **Vendor List** tab, click **Search**.
2. From the search results, select a vendor, and click **Edit Approval Details**.
3. On the **Approval Details** page, **Order Types** area, select an order type, and click **Unapprove Vendor**.
4. On the **Edit Approval Status** page, provide the requested information, and click **OK**.
5. On the **Approval Details** page, **Service Types** area, select a service, and click **Unapprove Vendor**.
6. On the **Edit Approval Status** page, provide the requested information, and click **OK**.

Create vendor reliability reports

About this task

You can review a vendor's performance by generating the Vendor Reliability Report. This report includes, for example, the following data over a specified number of months:

- Total number of purchase orders
- Total number of returns
- Average number of orders
- Purchase order value
- Delivery performance

The number of months covered by the report is configurable. Contact your CAMO administrator if you need to change the time period covered in the report.

Steps

On the **Vendor Details** page, click **Print Vendor Reliability**.

Record exchange vendor information for parts

About this task

You can record a variety of exchange vendor information for a part. You can:

- Assign an exchange vendor to a part.
- Set a preferred exchange vendor for a part.
- Assign a specific airport to an exchange vendor for a part. Some parts can only be exchanged at particular airport locations. If no airports are designated, the exchange is considered to be available at all locations.

Steps

1. On the **Part Details** page, **Vendors** tab, **Exchange** sub-tab, click **Assign Exchange Vendor**.
2. On the **Add Exchange Vendor** page, provide the requested information and click **OK**.
3. On the **Part Details** page, **Vendors** tab, **Exchange** sub-tab, select a vendor.
4. Click **Set As Preferred Vendor**.
5. On the **Confirm** page, click **Yes**.
6. On the **Part Details** page, **Vendors** tab, **Exchange** sub-tab, in the **Exchange Details** column, click **Exchange Vendor Details** .
7. On the **Exchange Vendor Details** page, click **Assign Airport**.
8. In the **Select Airports** dialog box, select an airport and click **Add**.

Add repair vendors for parts

About this task

You can record the vendors that repair a particular part, and mark one vendor as the preferred repair vendor for that part.

Steps

1. On the **Part Details** page, **Vendors** tab, **Repair** sub-tab, click **Assign Repair Vendor**.
2. On the **Add Repair Vendor** page, click **Select Vendor**.
3. On the **Vendor Search** page, enter your search criteria and click **Search**.
4. From the search results, select a vendor and click **Assign Vendor**.
5. On the **Add Repair Vendor** page, click **OK**.
6. On the **Part Details** page, **Vendors** tab, **Repair** sub-tab, select a vendor.
7. Click **Set As Preferred Vendor**.

Requests for vendor quotations

When filling an open purchase request, you can send out a request for quotation (RFQ) to a number of vendors so that you can choose the most appropriate one. You can create an RFQ for open purchase requests for:

- Part numbers that do not have a preferred vendor.
- Part numbers that do not have a price associated with the preferred vendor.
- Part numbers for which the vendor price has expired.

You can also create an ad hoc RFQ that is not associated with a purchase request.

You can group several part requests to be sent to the same vendor into one RFQ. This type of RFQ includes several lines, one for each part request.

Request quotes from vendors

About this task

You can create an RFQ based on an existing part request, or you can create an ad hoc RFQ. Create an ad hoc RFQ when there is no part request.

After you have prepared the RFQ, you send the RFQ to one or more vendors.

Steps

1. You can create a regular RFQ or an ad hoc RFQ.

Option	
To create a request for quotation	On your to-do list, **Open Part Requests** tab, select a part request, and click **Create RFQ**.
To create an ad hoc request for quotation	On your to-do list, click **Create Ad Hoc RFQ**.

2. On the **Create RFQ** page, provide the requested information and click **OK**.
3. On the **RFQ Details** page, **Vendor Quotes** tab, select a vendor, and click **Print RFQ**.
4. Fax or e-mail the RFQ form to the vendor.
5. On the **RFQ Details** page, click **Send RFQ**.

Edit requests for quotations

About this task

You can add parts, non-part items such as warranties and insurance, and vendors to a request for quotation (RFQ), and you can edit those items.

Steps

1. On the **RFQ Details** page, **RFQ Lines** tab, click **Edit RFQ Lines**.
2. On the **Edit RFQ Lines** page, review the values, and adjust as necessary.
3. Click OK.
4. On the **RFQ Details** page, **RFQ Lines** tab, click **Add Part Line**.
5. On the **Part Search** page, enter your search criteria and click **Search**.
6. From the search results, select a part, and click **Assign Part**.
7. On the **Edit RFQ Lines** page, review the values, and adjust as necessary.
8. Click OK.
9. On the **RFQ Details** page, RFQ Lines tab, click **Add Misc Line**.
10. On the **Add Miscellaneous RFQ Line** page, provide the requested information and click OK.
11. On the **Edit RFQ Lines** page, review the values, and adjust as necessary.
12. Click OK.
13. On the **RFQ Details** page, **Vendor Quotes** tab, click **Add Vendor**.
14. On the **Vendor Search** page, enter your search criteria, and click **Search**.
15. From the search results, select a vendor and click **Assign Vendor**.

Receive quotes from vendors

About this task

After you have sent a request for quotes (RFQ) to various vendors, the vendors return quotes on the various items. You must manually record these quotes in CAMO.

After all of the vendors have provided quotes, you must select the winning quote, and promote it to a purchase order.

Steps

1. Find an RFQ by doing one of the following:
   - In the **Barcode Search** field, enter the RFQ number, and press **Enter**.
   - On the **RFQ Search** page, enter your search criteria, and click **Search**.
2. On the **RFQ Details** page, **Vendor Quotes** tab, select a vendor and click **Edit Vendor Quote**.
3. On the **Edit Vendor Quote** page, **Details** area, provide the required information. Note the following:
   - **Exchange Rate**: If the quote is in a foreign currency, enter an exchange rate so that the quote can be compared to quotes in different currencies.
4. On the **Edit Vendor Quote** page, **Lines** tab, provide the required information. Note the following:
   - **Quote Number**: Enter the quote number provided by the vendor, and click **Apply to Each Line**.
   - **Quote Date**: Enter the date that vendor provided the quote, and click **Apply to Each Line**.
   - **Does Not Supply**: Select if the vendor does not supply the part.
   - **Did Not Quote**: Select if the vendor did not provide a quote for the part.
   - **OEM Part No**: Select of OEM part number of the item, as written on the quote.
   - **Quote Qty**: Enter the numbers of parts as written on the quote.
   - **Unit Price**: Enter the price per part as written on the quote.
   - **Lead Time**: Enter the time it will take to receive the part from the vendor.
   - **Effective To**: Enter the date when the vendor quote expires.
5. Do one of the following:
   - Click **Apply** to save your changes and continue editing.
   - Click OK to save your changes and return to the **RFQ Details** page.
6. On the **RFQ Details** page, **Quote Comparison** tab, review the RFQ response details for each part.
7. Select a vendor for one or more parts. You must select the same vendor for each part.
8. Click **Create PO For Quote**.
9. On the **Create PO** page, provide the requested information and click OK.

Vendor repairs

If your organization's local repair shop cannot repair a part due to a lack of capability, capacity, skills, or finances, you can send the part to an external repair shop to be fully or partially repaired. You can use CAMO to track the status of repairs, cost of repairs, and the terms of the external repair order contract according to the requirements of your organization.

You can create a repair order to carry out vendor repairs through unserviceable inventory or by scheduling a work package for the inventory items to be repaired.

When creating a repair order through unserviceable inventory, you must select the repair vendor to which the inventory will be sent, the account to which the repair cost will be charged and the location to which the inventory will be returned.

Additionally when creating a work package and scheduling it for repair, you must select the Issue To Account to charge a given part against, the start date of the repair, and the Promised by Date on which the part is expected to be returned to the vendor.

Once the repair order has been created, you can send the part to the vendor for inspection. After the repair vendor receives the unserviceable part for inspection, it can decide to:

- Send you a quote to repair the item.
- Exchange the unserviceable item for another serviceable part.
- Scrap the item in its repair shop.
- Return the item to you without repair.

Alternately, the vendor might send you a price for the repair (based on standard repair prices) before it receives the actual item for inspection, or you might decide to exchange the part before sending it to the repair vendor for inspection.

When you receive the repair vendor's response, you must:

- Update the repair order to indicate the course of action.
- Have the repair order authorized.
- Issue the repair order to the repair vendor for completion.

Related concepts

Repair orders

Assign a repair vendor to a part

About this task

You can assign a repair vendor to a part, indicating that the vendor has been approved to repair that particular part. You can do this when you are preparing a repair order, or when you are scheduling a work package.

Steps

1. On the **Part Details** page of the required part, **Vendors** tab, **Repair** sub-tab, click **Assign Repair Vendor**.
2. On the **Add Repair Vendor** page, click **Select Vendor** to select the vendor that can repair this part, and provide the following information:
   - The **Standard Repair Price**, if one exists, for this part with this vendor.
   - The **Standard Repair Time**, if one exists, for this part with this vendor.
   - The **Contract Number**, which is the contract that you have with this vendor for repairing this part.
3. Click **OK**.

Add tasks or faults to a work package

About this task

Before you can send a component for repair, you must add to a work package the tasks that need to be carried out to repair that component. This list of tasks is called the workscope.

If a work package has not been created, you must to create one. If a work package for the component already exists, it is displayed in the Work Package column of your to-do list.

After you create the workscope, you must schedule the work package, and then commit the workscope.

Steps

1. Find a work package by doing one of the following:
   - In the **Barcode Search** field, enter the work package barcode, and press **Enter**.
   - On the **Task Search** page, in the **Work Package Information** area, provide the information requested and click **Search**.
   - On your to-do list, in the **Work Package** column of any tab, click a work package name.
2. On the **Work Package Details** page, **Unassigned** tab, **Unassigned Tasks** sub-tab, select a task or tasks and click **Assign Task to this Work Package**.
3. On the **Work Package Details** page, **Unassigned tab**, **Unassigned Faults** sub-tab, select a fault or faults, and click **Assign Fault to this Work Package**.
4. On the **Work Package Details** page, click **Schedule Work Package**.
5. On the **Schedule Work Package**page, provide the required information. Note the following:
   - **Collection Required**: Select this option if you want a supervisor to flag all job cards in CAMO that are collected on paper when the work is done.
   - **Scheduled Location**: Click **Select Location** to select the maintenance location where the work package will be done.

- **Scheduled Start/End**: Select the date and time when the work package is scheduled to begin and end.

6. Click OK.
7. On the **Work Package Details** page, click **Commit Scope**.
8. If prompted, enter your password and click **OK**. The status of the work package changes from Active to Commit. If you did not generate the workscope before committing, the **Workscope** tab is added to the **Work Package Details** page. On the **Workscope** tab, a thick line appears below the last task, indicating the commit point. Any task you add after committing appears below this line.

> **Tip** If you do not start the work package, you can click **Uncommit Scope** to undo the commit operation. Undoing the commit operation removes the date and location from part requests, and cancels any part reservation created manually or automatically.

Send components to vendor for repair

You can create, authorize, issue and print a repair order to complete the workflow of sending a unserviceable component for repair to a repair vendor.

About this task

To have an unserviceable part repaired by a repair vendor, you must:

- Create a repair order.
- Have the repair order authorized.
- Send the approved repair order to the vendor.

If needed, you can change the vendor on a repair order, or assign a new vendor for a part.

Steps

1. On your to-do list, **Unserviceable Staging** tab, select an inventory item.
2. Click **Create Repair Order**.
3. On the **Create Repair Order** page, provide the requested information and click OK.
4. On the **RO Details** page, click **Request Authorization**.
5. On the **Request Authorization** page, select the **Authorization Flow** for the order type and click OK.
6. If prompted, enter your user name and password and click **OK**.

Note The status of the Authorization status will be set to REQUESTED. If you are able to authorize the value amount of the purchase order, the order status is set to AUTH and the Authorization Status is set APPROVED.

7. On the **RO Details** page, click **Issue Order**.
8. On the **Issue RO** page, enter any notes necessary, and click **OK**.
9. On the **RO Details** page, click **Print Order**.
10. Send the printed order to the repair vendor.

Accept return of an unserviceable component

About this task

If a vendor cannot repair a part in an acceptable amount of time, you can request that it return the part to you. If you refuse a vendor's proposal to scrap a non-repairable inventory, the vendor should return it to you. The vendor provides you with the repair order number as a reference.

Steps

1. Find the order by doing one of the following:
   - In the **Barcode Search** field, enter the order number, and press **Enter**.
   - On the **Order Search** page, enter the search details, and click **Search**.
2. On the **RO Details** page, **Order Lines** tab, click **Edit Lines**.
3. On the **Edit Order Lines** page, update the unit price and other information provided by the vendor and click **OK**.

The repair order can be closed once the shipment for the unserviceable inventory is received.

Return inventory to vendors

Upon receiving ordered inventory, if the receiving clerk finds a discrepancy or if the item fails inspection, the order agent or authorized role can return the inventory to the vendor.

About this task

You can return inventory that has or has not been inspected yet. If an invoice is not yet created for the item you are returning, you can request a replacement item or cancel the original PO (after the return to vendor shipment is sent). When you request a replacement item before the order has been closed, an outbound shipment of type RTNVEN is created on the original PO on which the inventory was ordered. A pending inbound shipment is created, to receive the returned quantity of the part, on the original PO as well. If the inventory being returned is excess inventory, sending the shipment will return the inventory to the vendor and archive the excess inventory in CAMO.

Steps

1. On the **Inventory Details** page, click **Return To Vendor**.
2. On the **Return To Vendor** page, provide the requested information. Note the following:
   - RMA (Return Material Authorization) Number (optional).
   - Return Quantity: Mandatory for batch inventory. The maximum quantity that you can return in this transaction is the Bin Quantity on the Inventory Details page, Details tab, Batch-Controlled Inventory Information area. The exception to this rule is when the batch that you are returning has a mix of invoiced and uninvoiced items. In this case, the maximum quantity that you can return in this transaction is the number of invoiced items or the number of uninvoiced items - whichever number is higher. In this same case, if you need to return the full quantity of the batch, do two separate Return to Vendor transactions - return the invoiced quantity in one, send the shipment and then return the uninvoiced quantity.
3. Click **OK**.

When you mark an item to be returned to a vendor, a shipping request is created with a RTNVEN type and sent to the storeroom clerk, who returns the item.

Note The shipping request is also displayed in the Open Moves tab of the Inventory Details page.

Routing ship-or-shelf inventory

You can use Ship-or-Shelf (SOS) procedures, sometimes called Preserve all Serviceable Spares (PASS) procedures, to handle components removed from an aircraft as the suspected cause of a fault.

If the fault is corrected after removal, the component was likely the cause, and you can send it to be repaired. If the fault reappears, the component was not the cause, and you can return it to the inventory stores as serviceable.

After a possibly faulty component is removed from an aircraft, you can:

- Move it to quarantine.
- If the component is found to be the cause of the fault, mark it as repair required (unserviceable), and create a work package for the repair.
- If the component is found to not be the cause of the fault, mark the fault as no fault found, cancel the fault, and mark the component as serviceable.You can tell that a part is ship-or-shelf if the Ship or Shelf check box is selected on the Part Details page, Details tab, Details area.

Note You can identify whether a part is ship-or-shelf if the Ship or Shelf check box is selected on the Part Details page, Details tab, Details area.

Scrapping inventory at vendor

When you send inventory to a vendor for repair, the vendor may advise you that it is not repairable or may quote a price that is too costly. When the part is beyond economical repair, you can ask the vendor to scrap the inventory for you.

Inventory for assembly, tracked, serialized and batch parts can all be sent to a vendor for repair and, if necessary, scrapped there. To scrap inventory at a vendor location, once the inventory has been sent to be repaired, you can convert the repair order line to scrap. At this point, you can record the price per unit that it will cost to scrap the inventory, the reason for scrapping the inventory and the account to which the scrap cost will be charged. Additionally for batch inventory to be scrapped, you can define the quantity of the inventory that should be scrapped and any remaining inventory quantity will remain to be repaired on the repair order line. At this point, the inventory on the order line converted to scrap, will be condemned in CAMO.

When scrap lines have been added to a repair order, the repair order will be opened so that it can be authorized and issued again and the original inbound shipment will be canceled as it no longer accurately reflects the inventory to be received. To create a new inbound shipment, for inventory that is in repair or remains to be repaired on the repair order, you must be authorize and issue the repair order again.

After a vendor scraps the inventory, you can validate the scrap and attach scrap documents directly to the inventory from the repair order, to scrap the inventory in CAMO. Once all scrap lines on a repair order have been validated and all repaired inventory has been received, the repair order status will change to received and the corresponding work package is ready to be closed. If the repair order only contains scrap lines, once all lines have been validated as scrapped and no open tasks exist on the work package, the work package for the repair order will be automatically closed.

Related concepts

Scrapping and condemning

Convert line to scrap

You can convert a repair order line to a scrap line, to scrap a required quantity of inventory, at a vendor location.

Prerequisite

- The inventory must be at the repair vendor location with the INREP condition. To do this, you need to send the outbound shipment for the repair order to the vendor and should not have received the whole quantity specified on the repair order line.
- A scrap account must be created.

Steps

1. On the **Order Search** page, search for the repair order for inventory to scrap at the vendor.

2. Click the link for the repair order.
3. On the **RO Details** page, select the repair order line that you want to convert and click **Convert Line To Scrap**.
4. On the **Convert Line To Scrap** page, provide the requested information, paying particular attention to the following fields:
   - **Charge To Account**: Enter or select the scrap account to charge the expenses that occur as a result of scrapping inventory. This updates the account for the scrap line.
   - **Scrap Price Per Unit**: Enter the price to scrap each unit of the inventory. This updates the unit price for the scrap line.
   - **Quantity**: Enter the quantity of inventory to be scrapped.
5. Click **OK**.

A new scrap line will be added to the repair order for the quantity of inventory that was specified to be scrapped and the inventory on the scrap line will be condemned in CAMO. If a partial quantity of a batch that was to be repaired was scrapped, the quantity and the line price on the corresponding repair order line will be updated accordingly. Converting the line to scrap will set the inventory condition to condemned until you validate the scrap, after which the inventory condition will be updated to scrapped. When scrap lines have been added to a repair order, the repair order will be opened so that it can be authorized and issued again. At this point, the original inbound shipment will be canceled as it no longer accurately reflects the inventory to be received. To create a new inbound shipment, you must authorize and issue the order again.

Note When you convert the whole quantity specified in the repair order line to a scrap line, any taxes, charges, account and warranty details defined on the order line, are removed from the scrap line. If required, you can edit the scrap line and add the values manually.

What's next

Validate scrap

Related tasks

Validate scrap

Validate scrap

After a vendor scraps inventory, you must validate the scrap to update the inventory condition of inventory on the scrap lines to Scrapped in CAMO. At this point, you can also attach scrap documents to the inventory directly from the repair order.

Prerequisite

You must have a repair order with at least one scrap line that has not yet been validated. In order to validate scrap, the component work package cannot have any active tasks. Users should unassign, cancel, complete or terminate any active tasks in the component work package before validating scrap.

About this task

You can scrap inventory and attach scrap documents for all the scrap lines on a repair order.

Steps

1. On the **Order Search** page, search for the repair order with scrap lines to be validated.
2. Click the link for the repair order.
3. On the **RO Details** page, click **Validate Scrap**.
4. On the **Validate Scrap** page, provide the requested information, paying attention to the following field:
   - **Scrap Quantity**: Enter the quantity of inventory to be scrapped.
5. (Optional) Click **Add Attachment** to add scrap documents that have been received for the inventory.
   a) On the **Add Attachment** page, in the **Attachment** area, drag and drop the file or click to select a file.
   b) Enter the requested information and click **OK** or to add another attachment, click **OK and Repeat**.
6. On the **Validate Scrap** page, click **Scrap**.

Inventory will be scrapped and the condition set to Scrapped for the scrap quantity specified when validating scrap. In the case of a repair order scrap line for which a partial quantity has been scrapped, the remaining quantity of inventory will remain in the Condemned condition. In the Scrap Document Receipts section of the Receipt and Returns tab, you can view a summary of scrapped inventory for each scrap line.

Note To validate scrap, click the "Validate Scrap" button. This will scrap the inventory and automatically complete the component work package (WP). However, for the WP to complete automatically, you must have the required sign-off skill assigned to the WP. The BLANK_RO_SIGNATURE configuration parameter defines a skill that may be assigned to the component work package. However, users can also add and remove skills. To validate scrap, you need to have the skill assigned to the Sign-off Requirements section of the work package, which may not necessarily be the skill from the configuration parameter.

Related tasks

Convert line to scrap

Warranties

You can manage warranties offered by a vendor to replace or repair a malfunctioning item, through warranty contracts for assemblies, components and tasks.

When a new component or service is purchased, it may come with a warranty. A warranty contract can be created as a template to record the details, terms and conditions of the actual warranty.

Warranty contracts can apply to any combination of parts, labor, and routine tasks. You can create assembly, component, and task warranty contracts:

- An assembly warranty contract is defined by its relationship to a specific aircraft, engine, or APU.
- A component warranty contract is defined by its relationship to a specific purchased component.
- A task warranty contract is defined by its relationship to a specific maintenance task.

Once the warranty contract has been created, you can add terms and conditions and various details, such as applicable parts or task definitions, and authorized vendors and internal repair locations, if any, depending on the suitability. Once finalized, the warranty contract should be activated prior to assigning it to an inventory or a task. Once the contract has been activated, it can be automatically or manually initialized, to associate the contract with an inventory item or task.

You can also assign warranties to not-yet-received inventory when you create purchase, repair, or exchange orders. The assigned warranty is initialized when the inventory is received and inspected.

After an inventory item is removed from an aircraft, or a task in a work package is completed, and the warranty for the item has been initialized, CAMO either automatically evaluates warranties on the items or tasks, or you can evaluate them manually.

When the warranty period is over, the warranty will automatically expire. You can also manually set a warranty to expired, if required.

You can manually deactivate warranty contracts that have expired. Deactivated warranty contracts cannot be edited or reactivated, and cannot be initialized against inventory or tasks.

Warranty contract status

Action	Contract status	State
Create new warranty contract	BUILD	Editable
Edit existing warranty contract	BUILD	Editable
Activate warranty contract	ACTV	Read-only
Initialize warranty contract	ACTV	Read-only
De-activate warranty contract	DEACTV	Read-only

Warranty contracts

Create warranty contracts

You can create warranty contracts to serve as templates that define the details, terms and conditions of an actual warranty and are applicable on parts, labor and routine tasks.

About this task

You can create assembly, component, and task warranty contracts:

- An assembly warranty contract is defined by its relationship to a specific aircraft, engine, or APU.
- A component warranty contract is defined by its relationship to a specific purchased component.
- A task warranty contract is defined by its relationship to a specific maintenance task.

When creating a warranty contract, you must enter different information based on the warranty contract type.

Steps

1. On the **Warranty Contract Search** page, click **Create Assembly Warranty Contract**, **Create Component Warranty Contract**, or **Create Task Warranty Contract**.
2. On the page selected in Step 1, provide the requested information and click **OK**.

Create component warranty contract

You can create component warranty contracts to manage warranties for components from a single vendor based on a defined set of details, terms and conditions.

Steps

1. On the **Warranty Contract Search** page, click **Create Component Warranty Contract**.
2. On the **Create Component Warranty Contract** page in the **Warranty Information** area, provide the following information:
   - **Warranty ID**: Enter a unique warranty contract ID number. The actual warranty number should be used, but may require a prefix of the issuing vendor.
   - **Subtype**: Select a subtype for reporting purposes.
   - **Vendor**: Select a vendor. Only items purchased from a vendor against the warranty contract will be eligible to automatically get the warranty. Warranties can be manually be assigned to any part.
   - **Base Part No**: Enter a part that is covered by the warranty or enter a prefix for all parts to be covered by the warranty. Additional parts to be covered under the warranty can be added after the contract is created.
   - **Receiving Condition**: Select the appropriate condition in which the inventory should be, for the warranty contract to be applicable.
   - **Priority**: Select the warranty contract's priority in relation to other possible warranty contracts initialized for the same tails or serial number.
   - **Contract Expiry Date**: If the warranty has an expiry date, you may enter the expiry date. Once the expiry date has passed, the warranty will no longer be applied (automatically or manually) to inventory items. A warranty can be deactivated manually at any time, even if an expiry date has been defined.
3. In the **Duration** area, provide the following information:
   - **Whichever Comes First** or **Whichever Comes Last**: Select either of these options to set an initialized warranty to expire once the first or last term has elapsed for either the duration, hours or cycles you will specify below.
   - For the **Duration** , **Hours** and **Cycles** fields, enter a value for one of the fields, at minimum.
   - **Duration**: Enter the duration after initialization at which initialized warranties for the warranty contract will expire and select the required calendar type - day, month or year.
   - **Hours**: Enter the number of hours of inventory usage at which initialized warranties for the warranty contract will expire.

- **Cycles**: Enter the number of cycles of inventory usage at which initialized warranties for the warranty contract will expire.

4. In the **Summary** field, enter any notes about the warranty contract. These notes will appear on the warranty contract and the Inventory Details page, Details tab.
5. Click **OK**.

What's next

Edit the warranty contract to finalize details, terms and conditions before activation.

Related tasks

Edit warranty contracts

Edit warranty contracts

After you create a warranty contract, you can add various details and terms and conditions.

About this task

The following information can be added on a warranty contract, once created:

- Applicable parts
- Technical references (Items)
- Attachments
- Vendors
- Internal repair locations

Steps

1. On the **Warranty Contract Details** page, **Details** tab, **Applicable Parts** area, click **Assign Part No** .
2. On the **Part Search** page, enter your search criteria and click **Search**.
3. From the search results, select a part and click **Assign Part**.
4. On the **Warranty Contract Details** page, **Details** tab, **Technical References** area, click **Add Technical Reference** .
5. On the **IETM Search** page, enter your search criteria and click **Search**.
6. From the search results, select a technical reference and click **Assign IETM Topic**.
7. On the **Warranty Contract Details** page, **Details** tab, **Attachments** area, click **Add Attachment** .
8. On the **Add Attachment** page, in the **Attachment** area, drag and drop the file or click to select and upload a file from your computer.
9. Enter the requested information and click **OK** or to add another attachment, click **OK and Repeat**.

10. On the **Warranty Contract Details** page, **Terms & Conditions** tab, **Authorized Repair/ Purchase Vendors** area, click **Add Vendor** .
11. On the **Vendor Search** page, enter your search criteria and click **Search**.
12. From the search results, select a vendor and click **Assign Vendor**.
13. On the **Warranty Contract Details** page, **Terms & Conditions** tab, **Authorized Internal Repair Locations** area, click **Add Location** .
14. On the **Location Search** page, provide your search criteria and click **Search**.
15. From the search results, select a location and click **Assign Location**.

Activate warranty contracts

You can activate a warranty contract to lock its details, terms, and conditions so that they cannot be edited.

About this task

Activate a warranty contract to prevent conflicts that could occur if the warranty contract expiry date is changed after the warranty is initialized against actual inventory. For example, scheduling conflicts could arise if the expiry date of the warranty contract is set to a date before the end date of the actual warranty as applied to a part.

Activate a warranty contract when its terms and conditions are finalized, and when the warranty contract is ready to be assigned to actual inventory.

Steps

Go to the **Warranty Contract Details** page and click **Activate**.

Assign warranties to inventory

You can assign warranties to not-yet-received inventory when you create purchase, repair, or exchange orders.

About this task

You cannot assign warranty contracts to inventory ordered through borrow and consignment orders, because items received for these orders are still owned by the vendor or the supply organization.

The assigned warranty is initialized when the inventory is received and inspected.

Steps

1. Go to the **Order Search** page, enter your search criteria and click **Search**.

Tip Search for orders that have an Order Type of either Purchase, Repair or Exchange and an Order Status of either Issued or Partial.

2. Click the link for the order.
3. On the order details page, **Order Lines** tab, select an order line and click **Assign Warranty**.
4. On the **Warranty Contract Search** page, enter your search criteria and click **Search**.
5. From the search results, select a warranty and click **Assign Warranty Contract**.

Component warranty contract initialization

A component warranty contract is automatically or manually initialized, when it is applied to a specific inventory item.

Automatic Initialization

A warranty contract is automatically initialized upon inspection of an inventory item for which the vendor, last received condition and part number match those defined on the contract. The part number that is checked to automatically initialize a contract can be either the part number defined for an applicable part or a base part number defined on the warranty contract. If a warranty contract is assigned to an order line, upon inspection of the inventory item for the line, it will be automatically initialized over any other matching warranty contracts.

Manual Initialization

You can manually initialize a warranty contract on the Warranty Contract Details or Inventory Details page, for inventory for which the last received condition matches the receiving condition defined on the contract.

Initialize warranty contracts manually

You can define the start date and terms and conditions for warranty coverage specific to an inventory item or actual task, to manually initialize a warranty contract.

About this task

You must initialize warranty contracts on specific inventory before warranties can be evaluated.

Warranties cannot be initialized for batch inventory.

Warranty contracts must be activated before they can be initialized.

Steps

1. On the **Warranty Contract Details** page, click **Initialize Warranty Contract**.

2. On the **Initialize Warranty Contract** page, provide the requested information and click **OK**.

Edit warranties

You can edit warranties that have been initialized against specific inventory.

About this task

You can edit different information based on the warranty type:

- **Task Warranty**: Edit the warranty priority.
- **Component Warranty**: Edit the warranty start date and priority.
- **Assembly Warranty**: Edit the start date, hours remaining, cycles remaining, and priority.

Steps

1. On the **Warranty Contract Details** page, **Initialized Warranties** tab, select a warranty and click **Edit Warranty**.
2. On the **Edit Initialized Warranty** page, edit the fields as required and click **OK**.

Extend component warranty contract

You can set the expiry date of a component warranty contract in the Active status to a date later than one that has been defined, or set a date for a contract for which an expiry date has not yet been defined.

Steps

1. On the **Warranty Contract Details** page, click **Extend Warranty Contract**.
2. On the **Edit Warranty Contract Expiry Date** page, in the **Contract Expiry Date** field, select the extended expiry date.
3. Click **OK**.

Expire warranties

You can manually mark warranties as expired when needed.

About this task

Warranties automatically expire when the warranty period is over, however, you can manually set them to expire, as well.

Steps

1. On the **Warranty Contract Details** page, **Initialized Warranties** tab, select a warranty and click **Expire Warranty**.
2. On the **Confirm** page, click **Yes**.

Deactivate warranty contracts

About this task

You can manually deactivate warranty contracts that have expired. Deactivated warranty contracts cannot be edited or reactivated.

Deactivated warranty contracts have a status of historical, and cannot be initialized against inventory or tasks. Deactivating a warranty contract has no effect on warranties that have already been initialized.

Steps

On the **Warranty Contract Details** page, click **De-Activate**.

Warranty evaluation

When a part is removed from an aircraft, or a task in a work package is completed, the parts and labor used are evaluated for warranty eligibility. Warranty evaluation can take place automatically or manually.

Automatic warranty evaluation occurs when a work package is committed, and when a work package is completed. During automatic evaluation, CAMO evaluates the warranty eligibility of tasks, parts, and labor in completed work packages and return shipments.

You can manually evaluate warranties if the work package is active or in work. When you evaluate a warranty manually, it is added to the evaluation queue, and runs after previous automatic or manual evaluations are complete.

To evaluate warranty coverage, warranties must be initialized against specific inventory or tasks.

During warranty evaluation:

- Initialized assembly warranties are evaluated for all tasks (part requirements and labor) on the aircraft or on any sub-inventory.
- Initialized assembly warranties on a component work package are evaluated for tasks (part requirements and labor) needed for the repair of an engine or other major assembly.
- Initialized component warranties on a component work package are evaluated for labor and materials used for the repair of the component.
- Initialized task warranties are evaluated for all parts and labor on a task (service bulletins and exchange orders) or its sub-tasks.

Evaluate warranties manually

After an inventory item is removed from an aircraft, or a task in a work package is completed, you can manually evaluate the inventory and labor used for warranty eligibility.

About this task

You can manually evaluate warranties when a work package is active or in work. When you evaluate a warranty manually, it is added to the evaluation queue, and runs after previous automatic or manual evaluations are complete.

To evaluate warranty coverage, warranties must be initialized against specific inventory or tasks.

Steps

1. On the **Work Package Details** page, click **Run Warranty Evaluation**.
2. On the **Work Package Details** page, **Warranty** tab, review the warranty evaluation results.

Finance management

Financial coverage in CAMO

CAMO records financial transactions against accounts when you purchase parts, repair parts, or perform any other materials-related activities. CAMO can send this information to an external financial system, or you can use this information to generate reports within CAMO.

CAMO financial information is limited to materials-related activities occurring within the software. CAMO does not provide the following types of financial records:

- Labor costs: CAMO records the hours against each maintenance task, and allows you to specify an hourly rate for each skill. CAMO does not record these labor expenses into the CAMO financial transaction log, which means that these labor expenses are not automatically supplied to your financial system. Labor expenses must be extracted and analyzed using a custom report.
- Overhead costs: CAMO does not track overhead costs, also known as indirect costs. This includes costs such as hangar facility heating, airport operation taxes, and technician training. To provide traceability for these items in CAMO, you must use miscellaneous purchase orders. However, miscellaneous purchase orders are not treated as assets in CAMO, but are simply charged to an expense account.
- Fixed asset depreciation: CAMO does not record the depreciation of fixed assets, also known as rotables. CAMO does not calculate the current value of a fixed asset. This means that when a financial transaction involving a fixed asset occurs, CAMO cannot determine the credit or debit amount for that transaction. We recommend that you record all fixed assets in your financial system's fixed asset register.

- Repair expense accrual and capitalization: CAMO does not accrue expense lines on repair, exchange, or borrow orders, or provide any means to capitalize these types of charges.
- Financial information for externally-owned inventory: The ownership of a part has a significant financial impact. You can have many items in your inventory that you do not own, including consignment parts, borrowed parts, vendor-owned parts, or customer-owned parts. CAMO does not treat externally-owned items as assets, so they do not affect the balance of any of your asset accounts. This means that you can receive, issue, or scrap any item that is owned by someone else, and no financial transaction is recorded in CAMO.

Related concepts

Inventory owners

Financial accounts

Every account in CAMO must have an account type. The account type determines when the account is used, and how it behaves.

CAMO uses accounts for asset and liability management, tracking the debits and credits as events occur. You can create separate accounts, and apply activities such as part requests, inventory issues, inventory turn-ins, inventory scrapping, and bin leveling to the appropriate account. Each vendor can also have an account to track the charges for external work packages.

Every account created in CAMO has an account code, which must be unique. Each account can have an external reference number and a T-code, which you can use to map CAMO accounts to your accounts in an external financial system.

Financial accounts and account types

Account type (code)	Description
Group (GROUP)	Used to model account hierarchies. Group accounts are used only to group sub-accounts for reporting or analysis. Transactions are never recorded directly against a group account.
Inventory asset (INVASSET)	Used for accounts of inventory assets, also called consumables. Every consumable part number is assigned to an inventory asset account.
Fixed asset (FIXASSET)	Used for accounts of fixed assets, also called rotables. Every rotable part number is assigned to a fixed asset account.

Account type (code)	Description
Expense account (EXPENSE)	Used for maintenance expenses, including part issues, component repairs, miscellaneous purchases, and more. You can organize your expense accounts in a variety of ways. For example, some companies create an expense account for each tail number, while others create an expense account for each type of maintenance.
Owner change account (CHGOWN)	Used to track expenses that occur as a result of ownership changes, such as taking ownership of vendor-owned inventory, or relinquishing ownership of inventory to a vendor.
Scrap account (SCRAP)	Used to track expenses that occur as a result of scrapping inventory.
Quantity adjustment account (ADJQTY)	Used to track expenses that occur as a result of quantity adjustments to on-hand inventory, such as wastage or loss. Quantity adjustment accounts are primarily used when recording corrections during cycle counts.
Price adjustment account (ADJPRICE)	Used to track expenses that occur as a result of price adjustments to a consumable part number.
Return to vendor credit account (RTVCRED)	Used to track credits that occur as a result of returning inventory to a vendor.
Invoice accrual account (INVOICE)	Used to accrue the value of parts that you have received, but have not yet paid for. The account value is owed to the vendor for received parts. There is only one universal, system-wide account of type INVOICE, and this account is created as part of the CAMO installation.
Accounts payable accrual account (AP)	Used when you mark an invoice for payment. The value of the invoice is accrued in this account. There is only one universal, system-wide account of type AP, and this account is created as part of the CAMO installation.
Consignment account (CONSIGN)	Used to accrue the liability associated with the consumption of vendor-owned consignment inventory.

Account type (code)	Description
Change financial type (CHGFINTP)	Used to accrue the costs related to changing the financial class of a part number. If you change to a Rotable or Expense financial type, account is debited. If you change from a Rotable or Expense financial type, account is credited.

Create financial accounts

About this task

You can create various types of accounts, including scrap, return to vendor, and expense accounts.

You can create separate accounts, and apply activities such as part requests, inventory issues, inventory turn-ins, inventory scrapping, and bin leveling to the appropriate account. Each vendor can also have an account to track the charges for external work packages.

CAMO uses financial accounts for asset and liability management, tracking the debits and credits as events occur.

Steps

1. On the **Account Search** page, **Accounts Found** tab, click **Create Account**.
2. On the **Create Account** page, provide the requested information and click **OK**.

Create financial sub-accounts

About this task

You can create an account hierarchy by create sub-accounts to a parent account.

Steps

1. On the **Account Details** page, **Details** tab, **Sub Accounts** area, click **Create Sub Account** ⊞.
2. On the **Create Account** page, provide the requested information and click **OK**.

Edit financial account details

About this task

You can edit details of financial accounts, including the account code, name, type, and more.

Steps

1. On the **Account Details** page, **Account Identification** area, click **Edit Account Details**.
2. On the **Edit Account** page, modify the fields and click **OK**.

Close financial accounts

About this task

You can close a financial account when it is no longer needed. Closed accounts do not appear in any account selection list in CAMO so that nothing can be assigned to them.

You cannot issue orders that have order lines assigned to a closed account. You cannot commit or start work packages that are assigned to a closed account.

You cannot close an account that:

- Is a default account.
- Contains open sub-accounts.
- Is assigned to a tax or a charge.
- Is assigned to a part number.

Steps

On the **Account Details** page, click **Close Account**.

Re-open closed financial accounts

About this task

You can re-open a closed financial account at any time, as long as the account is not attached to a closed parent account.

Steps

On the **Account Details** page, click **Open Account**.

Issue/Charge to accounts

Every part that you issue in CAMO must be applied to an account.

You can set a default account ahead of time using the Issue To Account field for any of the following:

- Aircraft
- Task definitions (and all tasks created from that task definition)
- Work packages
- Tasks
- Part requests (only adhoc, for others the Issue To Account comes from the task-work package-aircraft hierarchy)

You can set the Issue To Account field when you create a task definition, task, work package, or aircraft. Alternatively, you can edit the Issue To Account field by modifying the appropriate details page. You can also set the Issue To Account field for multiple tasks within a work package. It is possible for the Issue To Account to conflict among tasks, work packages, and aircraft. When a part request is created for a maintenance task, CAMO determines the issue to account depending on the type of work package.

For an aircraft work package:

- **Task:** Setting the issue to account on a task is optional. If it is specified, CAMO uses the issue to account on the task.
- **Work Package:** Setting the issue to account is optional on an aircraft work package. If the issue to account is specified on the work package, but was not specified on the task, then CAMO uses the issue to account for the work package.
- **Aircraft:** Setting the issue to account on an aircraft is mandatory. If the issue to account is not specified on either the task or the work package, then CAMO uses the issue to account for the aircraft.

For a component work package:

- **Task:** Setting the issue to account on a task is optional. If it is specified, CAMO uses the issue to account on the task.
- **Work Package:** Setting the issue to account is mandatory for a component work package. If the issue to account is not specified on the task, then CAMO uses the issue to account for the work package.

Issue To Account tells CAMO which internal account to charge a given part against. When you create an external repair order, any parts associated with the repair order inherit the account in Issue To Account, but under the Charge To Account field. This indicates the external account to which the parts are charged. The Charge To Account must be an expense type account.

Tracking financial information for inventory

Most financial transactions in CAMO pertain to parts and inventory. In CAMO, each part number includes a Financials group box on the Part Details page, which includes the financial class, ABC classification, and additional financial attributes that are based on the financial class. This financial information is described in the following topics.

Related concepts

ABC classification

Financial classes and types

In CAMO, when you create a part number, you must select a financial class. Each financial class is assigned to one of four finance type codes and these classes and codes trigger the appropriate financial transactions when inventory with the part number moves through CAMO workflows.

Financial class	Financial type code	Finacial Asset Account Type	Description
Repairable	Rotable	FIXASSET	Parts that can be repaired economically, but that are not expected to last the life of the aircraft.
Rotable	Rotable	FIXASSET	Parts that are usually the more expensive items. They can be repaired economically, and are expected to last the life of the aircraft.
Consumable	Consum	INVASSET	Parts that cannot be repaired economically, and that are expensed when they are installed.
Expendable	Expense	EXPENSE	Parts that are expensed immediately when the invoice is paid.
Kit	Kit	VOID	Parts that consist of collections of multiple other parts. The individual parts within the kit part are assigned one of the other financial classes in CAMO, and are expensed according to their respective finance type codes.

Rotable type parts

Rotable parts are typically large expensive items that can be repaired and last the life of the aircraft. In CAMO, rotable parts must have the following attributes:

Important Although you assign a financial class with the rotable type to rotable parts, financial information is not tracked in CAMO.

CAMO does not have a fixed asset register, and does not track rotable depreciation. This means that CAMO does not calculate the value of a rotable at any given time. The only financial transactions in CAMO for rotable parts are those related to invoice accrual and accounts payable (purchasing and invoicing). You must track rotables in an external financial system's fixed asset

register. The Rotable Adjustment Report in CAMO, which tracks additions and subtractions to rotable spare levels, can help manage the fixed asset registry.

Spare rotables are listed in the fixed asset register; rotables that were installed on the aircraft at time of receipt are not. This is because the aircraft itself is listed in the fixed asset register, and all of the parts that were installed on the aircraft when it was purchased are included in the aircraft's value.

Repairs do not affect rotable value. A rotable's value does not change when it becomes unserviceable. Only accounting depreciation will reduce the value of a rotable. Rotables are not removed from the asset register when they are issued to maintenance, nor are new rotables added to the asset register when one is turned in. When you purchase a rotable, you own it until it is sold or scrapped.

Consumable type parts

Consumable parts are small, inexpensive items that are managed in relatively large quantities. Financially, consumables are included on the asset balance sheet when received and removed from the balance sheet when they are issued to maintenance. In order to credit the inventory asset account (reduce your asset value), you must debit an expense account. In CAMO, you must select the expense account to be debited.

Consumables are always issued at the average unit price. CAMO does not track the price of each individual consumable item within a part number. For example, if you have two washers with the same part number, the system does not record that Washer A is worth $0.30 and Washer B is worth $0.45. Instead, CAMO always calculates the average unit price for a part number, weighted by quantity.

In order to calculate the average unit price, CAMO takes the unit price multiplied by the quantity for each item, and then divides by the total quantity. For example, you may purchase 10 items today at $10.00/EA, and then purchase two more items tomorrow at $15.00/EA. CAMO calculates the average unit price as $10.83 ([10 * $10.00 +2 * $15.00] / [10 + 2]).

On rare occasions, consumables can be turned-in from maintenance. This can occur because a consumable was issued, but was not used, or because you need to repair the consumable item. Once the consumable has been turned in, CAMO adds that item back to the asset balance sheet. Regardless of whether the consumable is serviceable or not, it is now considered a financial asset again. CAMO debits the original asset account and credits the original expense account, so that the original issue transaction is completely reversed.

Expense type parts

Expense parts are inexpensive items that are not rigorously tracked. Office supplies are a good example.

Expense parts never become assets. From a financial perspective, the items are used up or consumed immediately when the invoice is paid. This means that you must provide an expense account directly on any purchase order that procures these parts.

Changing financial class

If an error was made when assigning the financial class to a part, you can change the class by editing the part number, but there are some limitations.

Batch class inventory cannot be changed to a financial class with a ROTABLE financial type.

You cannot change the financial class of a part if:

- If there are consignment or consignment exchange orders for the part and the orders aren't closed.
- If there are purchase or exchange orders with inventory received on a shipment, but the orders aren't closed.

If the change in financial class changes the finance type of the part number, this triggers the "change financial type" transaction (CHNGFINTP):

- If you change to a Rotable or Expense financial type, this debits the financial type change account (CHNGFINTYPE).
- If you change from a Rotable or Expense financial type, this credits the financial type change account (CHNGFINTYPE).

Financial transactions

CAMO generates a transaction log of financially significant activities related to materials. For example, when you create inventory, inspect received inventory as serviceable, or issue inventory, CAMO records the financial transaction.

CAMO can send the transaction log to an external financial system using the Finance API. You can also view the transactions within CAMO, if you have the correct security privileges, using the Transaction Search page.

Financial transactions are recorded for the following actions:

Financial transaction types and their triggers

Financial transaction	A financial transaction is logged when
ADJPRICE (price adjustment)	The unit price of a consumable part is adjusted in CAMO. This transaction accounts for the change in value. • New AUP = provided value. • New Total Value = new AUP * current Total Qty.

Financial transaction	A financial transaction is logged when
ARCHIVE (archive inventory)	Consumable inventory is archived. • New Total Qty = current Total Qty - Archived Qty • New total value = current total value - AUP* Archived Qty • AUP unchanged
CHGFINTP (change financial type of part)	The financial type of a part number is changed to a Rotable or Expense financial type: this action debits the financial type change account (CHGFINTYPE). The financial type of a part number is changed from a Rotable or Expense financial type: this action credits the financial type change account (CHGFINTYPE).
CHGOWN (owner changed)	The owner of a consumable inventory item changes. From local to non-local owner: • New Total Qty = current Total Qty - Changed Qty • New Total Value = current Total Value - AUP*Changed Qty • AUP unchanged From non-local to local owner: • New Total Qty = current Total Qty + Changed Qty • New Total Value = current Total Value + AUP*Changed Qty • AUP unchanged
CRTINV (create inventory)	Consumable inventory is created locally. • New Total Qty = current Total Qty + Created Qty • New Total Value = current Total Value + AUP*Created Qty • AUP unchanged This transaction is not logged when inventory is received in a shipment and an inventory record is automatically created in CAMO.

Financial transaction	A financial transaction is logged when
INSP (receive inventory)	Ordered parts are: • Received as RFI (ready for issue). In this case the Force Inspection on Receipt check box is not selected for a part number, so it's status is RFI upon receipt. • Received and inspected as serviceable. The inventory condition changes from INSPREQ to RFI (or RFB if inventory is incomplete) when the inspector inspects inventory as serviceable. • Received and inspected as unserviceable. The inventory condition changes from INSPREQ to REPREQ. While the item is not RFI, you have taken ownership of it. For ordered kits that are received, a financial transaction is logged when the inventory is inspected as serviceable. • New Total Qty = current Total Qty + Received Qty • New Total Value = current Total Value + PO Line Unit Price* Received Qty; if PO Line does not exist use current AUP • New AUP = new Total Value / new Total Qty; if New Total Qty is 0, New AUP = 0 This transaction is not logged for purchases of non-part items such as services and warranties. Such items are not treated as assets, but as simple charges to an expense account.
ISSUE (issue inventory)	Consumable inventory is issued. • New Total Qty = current Total Qty - Issued Qty • New Total Value = current Total Value - AUP* Issued Qty • AUP unchanged
PAYINVC (validate invoice for payment)	An order invoice is validated for payment. Separate transactions are logged for each line in the invoice. Transactions are logged for part and non-part line items. • If there is a price difference between PO and Invoice, calculate Adjustment Amount = (On Hand Qty/(Issued Qty+On Hand Qty)*Price Difference • New Total Value = current Total Value + Adjustment Amount • New AUP = new Total Value/new Total Qty; new AUP is set to 0, if new Total Qty is 0

Financial transaction	A financial transaction is logged when
QTYADJ (quantity adjustment)	The quantity of consumable parts on hand is adjusted. This can happen when parts are lost or discrepancies are found during cycle counting. QTYADJ is also logged when a part number is changed - in this case, two transactions are recorded because two part numbers are impacted. (Qty, AUP, Total Value). • New Total Qty = current Total Qty + Adjusted Delta. • New AUP = (current Total Value + AUP*abs(Adjusted Delta))/new Total Qty; The AUP is recalculated only for debit (Adjustment Qty >0) transaction during part number change, otherwise the new AUP=current AUP. • New Total Value = new AUP*new Total Qty
RTNVEN (return inventory to vendor)	Inventory is received and subsequently returned to a vendor. The account that's debited by the transaction depends on whether the invoice for the item was paid. If the item is returned to the vendor before it's inspected, the item was never financially received - therefore when it's returned to the vendor, no financial transaction is logged.
SCRAP (scrap inventory)	Consumable inventory is scrapped. • New Total Qty = current Total Qty - Scrapped Qty • New Total Value = current Total Value - AUP* Scrapped Qty • AUP unchanged
TURNIN (turn in inventory)	Consumable inventory is turned in. • New Total Qty = current Total Qty + TurnedIn Qty • New Total Value = current Total Value + AUP* TurnedIn Qty • New AUP = new Total Value / new Total Qty, but only if a previous issue transaction exists (expected turn in) and has a different unit price than the current AUP
UNARCH (unarchive inventory)	Consumable inventory is unarchived. • New Total Qty = current Total Qty + Archived Qty • New Total Value = current Total Value + AUP* Archived Qty • AUP unchanged

Financial transaction	A financial transaction is logged when
UNDOINSP (undo receipt of inventory)	Receipt of inventory is reversed. For example, inventory for a purchase order was received and inspected as serviceable, but the purchase order is then converted to an exchange order. The UNDOINSP transaction is logged to negate the INSP transaction. • New Total Qty = current Total Qty - Received Qty • New Total Value = current Total Value - PO Line Unit Price * Received Qty; if PO Line does not exist use current AUP • New AUP = new Total Value / new Total Qty
UNDOISSUE (undo the issue transaction)	Consumable serialized inventory is issued, and then the Convert Purchase to Exchange button is used to transform the original purchase order to an exchange order. To trigger this transaction the original PO must be issued and the inventory must be received. The Unit Price on the original PO Order Line must be greater than 0, the financial class of the part must CONSUM (FINANCE_TYPE_CD = CONSUM). • New Total Qty = current Total Qty + Issued Qty • New Total Value = current Total Value + AUP* Issued Qty • AUP unchanged Note that this is a different transaction than when you click the Undo Issue button to reverse the issue of consumable inventory. In this case a TURNIN transaction is logged and CAMO undoes the issue transaction for the item.
UNSCRAP (unscrap inventory)	Consumable inventory is unscrapped. • New Total Qty = current Total Qty + Scrapped Qty • New Total Value = current Total Value + AUP* Scrapped Qty • AUP unchanged

CAMO logs a transaction when the inventory in a purchase order is received, but it does not log a transaction for the following order types:

Borrow Orders

CAMO does not accrue borrow costs. This means that there are no financial transactions recorded when the borrowed item is received and used. The only financial transaction for a borrow occurs when the invoice is validated for payment.

Repair Orders

When you repair a part, repair costs do not affect the balance of the asset account in any way. CAMO treats all repairs as a simple expense.

Miscellaneous Order Lines

When you purchase non-part items such as services and warranties, the purchases are tracked using miscellaneous lines on purchase orders. Miscellaneous (non-part) purchases are not treated as assets in CAMO; they are simple charges to an expense account.

The MANUAL_AUP_CALCULATION configuration parameter controls whether the average unit price (AUP) is calculated for the transactions that require AUP recalculation.

Related concepts

Exchange orders

Financial status of inventory

During the time between receiving a shipment of new inventory items and inspecting items as serviceable, you don't financially own the inventory and can't do much with it. There are different financial statuses to distinguish between inventory items that you own and items that you don't own yet.

In the user interface, the financial status code of inventory items isn't labeled although an order's Receipts & Returns tab, Received Qty column does distinguish received from financially received items. After a shipment is received but before any items for the order line are inspected as serviceable, you see two numbers in this column: the black color number is the quantity financially received (INSP financial status), the red color number is the quantity received but not inspected (NEW financial status). As the items are inspected as serviceable, the received quantity count is adjusted.

In the database, inventory items have one of the following financial status codes:

Inventory financial status codes

Financial status code	Description
NEW	Inventory for a purchase order was received on a shipment which created a new inventory record in CAMO. The inventory item requires inspection, but hasn't been inspected yet. It is therefore not financially received and cannot be used. • The received inventory does not count as received on the order's Receipts & Returns tab. The Received Qty column displays the number of items with NEW financial status in bracketed red text. • The order status isn't updated. • An invoice cannot be created for the order line. • The inventory can be returned to the vendor.

Financial status code	Description
RCVD	Inventory for a repair order was received on a shipment. The inventory requires inspection, but hasn't been inspected yet. It is not financially received.
INSP	Newly received inventory that requires inspection was inspected as serviceable or unserviceable and is now financially received. If the inventory item did not require inspection, it was RFI and financially received when the shipment was received. Financial transactions are triggered, inventory counts are incremented, an invoice can be created for the order line and the inventory is available for CAMO workflows. Inventory in INSP financial status can be returned to the vendor.

Financial reports

CAMO generates a transaction log of financially significant activities related to materials. For example, when you create inventory, inspect received inventory as serviceable, or issue inventory, CAMO records the financial transaction. CAMO can send the transaction log to an external financial system using the Finance API. You can also view the transactions within CAMO, if you have the correct security privileges, using the Transaction Search page.

Summary financial log report

The Summary Financial Log Report shows a summary of the financial transactions that occurred within a specified date range for every account that had a transaction. Credits and debits against each account are added, and the total is reported as a net credit or net debit.

To transmit the report information to an external financial system, the Finance API is recommended, but financial analysts can run this report in CAMO and use it to manually transcribe data into external financial systems. To see the details of each transaction, you can run the Detailed Financial Log Report.

The records in the report are sorted by Account Code.

To run this report on demand, select the **Summary Financial Log Report** from your role menu.

Specifications

The Summary Financial Log Report contains the following parameters:

> **Note** Bold fields are mandatory.

- **Start Date** The start date and time of the report period.

- **End Date**: The end date and time of the report period. (A typical reporting period is one month.)
- **Account Code**: Select ALL accounts or select account codes from the `fnc_account` table.
- **Account Type**: Select ALL types or select account type codes from the `ref_account_type` table.

Report Detail

The following table lists the report fields along with their description and location in CAMO.

Report field or column name	Description	Maintenix UI page	Maintenix UI field
Account Code	Financial account code	Account Details	Account Code
Ext. Ref	Financial account external reference code	Transaction Details	External Reference
T- Code	Financial T code	Transaction Details	T Code
Account Type	Financial account type	Account Details	Account Code
Debit	Debit Amount	Transaction Details	Debit
Credit	Credit Amount	Transaction Details	Credit

Related concepts

Detailed Financial Log Report

Related tasks

Generate financial and invoicing reports

Detailed Financial Log Report

CAMO generates a transaction log of every financially-significant materials activity that occurs. To see these details and analyze the financial transactions that occurred within a specified reporting period, you can run the Detailed Financial Log Report. You can choose to see the details of all transactions within a specific date range, or you can select specific account types and codes.

The debit and credit amounts shown for each transaction in this report, are summed up in the Summary Financial report.

When there are unexpected changes in costs, you can use the Detailed Financial Report to analyze all transactions against a specific account and to identify discrepancies.

The transactions in the report are sorted by transaction date and transaction number.

To run this report on demand (for auditing purposes), select the Detailed Financial Log Report from your role menu. To transmit this report information to an external financial system, the Finance API is recommended.

Specifications

The Detailed Financial report contains the following parameters:

> **Note** Bold fields are mandatory.

- **Start Date**: The start date and time of the report period.
- **End Date**: The end date and time of the report period. (A typical reporting period is one month.)
- **Account Code**: Select ALL or select account codes from the *fnc_account* table.
- **Account Type**: Select ALL or select account type codes from the *ref_account_type* table.

Report Detail

The following table lists the report fields along with their description and location in CAMO.

Note there is an existing limitation of the report: If a consumable part number is not repairable, then for the TURN IN transaction the report does not show the Aircraft, Work Package, WP Supply Location, or WP Location.

Report Field/ Column name	Description	Maintenix UI page	Maintenix UI field
Transaction ID	Transaction identifier	Transaction Search	Transaction ID
Date	Transaction date	Transaction Details	Transaction Date
Type	Transaction type	Transaction Details	Transaction Type
Description	Transaction description	Transaction Details	Description
Aircraft	Registration code	Inventory Details	Registration Code
Work Package	Work package order	Work Package Details	Work Package Number
WP Supply Location	Supply location code	Location Details	Parent Location
WP Location	Location code	Location Details	Code

Report Field/ Column name	Description	Maintenix UI page	Maintenix UI field
OEM Part No	Original Equipment Manufacture part number	Part Details	OEM Part Number
Serial No	Inventory serial number	Inventory Details	OEM Serial No
Order No	Order number	PO Details or other order details pages	Order Number
Invoice No	Invoice number	PO Invoice Details	PO Invoice Number
Account Code	Financial account code	Account Details	Account Code
External Ref.	Financial account external reference code	Transaction Details	External Reference
Currency	Currency code	Transaction Details	Debit/Credit
Account T-Code	Financial T code (account code or transaction code) that is used to integrate with an external system).	Transaction Details	T Code
Account Type	Financial account type	Transaction Details	Account Type
Debit	Debit amount	Transaction Details	Debit
Credit	Credit amount	Transaction Details	Credit

Related concepts

Summary financial log report

Related tasks

Generate financial and invoicing reports

Raised orders by account report

The Raised Orders By Account financial report shows order line information for all order types within the date range that you specify. Typically, you run this report to see a specific account code such as UNKNOWN so that you can identify and rectify orders that were created without legitimate account codes.

In some organizations, the UNKNOWN (or another placeholder) account code may be used by repair routers on the rare occasions when the account code is not already populated on a repair order line. This only happens when a part number is created and the Default Repair Order Account is not specified. In this situation, the repair order is not delayed, and finance can catch and correct the account code.

The records in the report are sorted by Order Number and Order Creation Date.

To run this report, select **Raised Orders By Account** from your role menu. See *Generate financial and invoicing reports*.

Specifications

The Raised Orders by Account report contains the following parameters:

> **Note** Bold fields are mandatory.

- **Start Date**: The start date and time of the report period.
- **End Date**: The end date and time of the report period.
- **Account Code**: List of account codes from the *fnc_account* table. The default value is All accounts.

Report Detail

The following table lists the report fields along with their description and location in CAMO.

Report field/ column name	Description	Maintenix UI page	Maintenix UI field
Order Number	Order number	Order Details > Order Information area	Order Number
Order Status	Received, Open, etc.	Order Details > Order Information area	Order Status

Report field/ column name	Description	Maintenix UI page	Maintenix UI field
Order Type	Type of order: Purchase, Exchange, Repair, Borrow, Consignment	Order Details > Order Information area	Type
Order Creation Date	Order creation date	Order Details > History tab	Date column
Vendor Code	Vendor code	Order Details > Order Information area	Vendor
Vendor Name	Vendor name	Order Details > Order Information area	Vendor
OEM Part Number	The OEM Part Number for the part in an order line.	Part Details > Part area	OEM Part Number
Part Name	The name of a part in an order line.	Part Details > Part area	Name
Order Quantity	Number of items ordered.	Order Details > Order Lines tab	Qty
Order Line	Part name and number in the line description for the order line.	Order Details > Order Lines tab	Line Description
Serial Number	The serial number for an item in an order line.	Order Details > Receipt & Returns tab > Inventory Receipts area > Line No	Serial No/Batch No
Account Code	Account that the order line is charge to.	Order Details > Order Lines tab	Account
Line Price	Price for the line.	Order Details > Order Lines tab	Line Price
Invoice Number	Invoice number for the order line.	Order Details > Receipt & Returns > PO Invoices area > Line No.	PO Invoice

Related tasks

Generate financial and invoicing reports

Rotable adjustment reports

The rotable adjustment reports help you review changes in the total spares count and nominal value of rotable stock. These reports list transactions that are associated with a fixed asset (FIXASSET) account for rotables.

The reports provide insight into nominal value (calculated based on the Average Price at Receipt) versus actual financial value because depreciation on rotable stock is not tracked in CAMO.

When you run these reports, you specify the reporting period.

Rotable adjustment report	Access in CAMO	Description
Purchases and Returns Report	Purchases and Returns menu item	Shows the INSP, UNDOINSP and RTNVEN transaction types related to orders. When a purchase order is fulfilled, inventory is received; it is inspected as serviceable (INSP). The purchase order may converted from purchase order to exchange order (UNDOINSP), or the inventory may be returned to the vendor (RTNVEN).
Archive and Owner Change	Archive and Owner Change menu item	Shows the archive inventory (ARCHIVE), unarchive inventory (UNARCH), and change the owner (CHGOWN) transaction types.
Create, Scrap, and Adjust Quantity Transactions	Create and Scrap menu item	Shows the create inventory (CRTINV), scrap inventory (SCRAP), SPARESQTYADJ, and unscrap inventory (UNSCRAP) transactions that occur when rotable inventory is created or scrapped, or when the number of spares for a rotable part is changed.
Price Adjustment	Price Adjustment menu item	Shows adjustments to the unit price (ARP) for rotable parts. Summarizes dollar value delta between the previous price and the adjusted price. Does not show changes to unit price for consumable parts.

Rotable adjustment report	Access in CAMO	Description
Exchange and Repairs Orders	Exchange and Repairs Orders menu item	Shows the EXCHRCVD and RCVREP transactions for exchange and repair orders where the part numbers of parts sent out are different from the part numbers of parts received. Changes in part number can occur when: • An exchange order is fulfilled with an alternate part from a part group. • A part number sent for repair is transformed through a modification task definition. Its part number changes to the number of an alternate part.

Rotable Adjustment Purchases and Returns report

The Purchases and Returns report shows additions and removals of rotable spares inventory through the INSP, UNDOINSP and RTNVEN transaction types related to orders. When a purchase order is fulfilled, inventory is received; it is inspected as serviceable (INSP). The purchase order may be converted from purchase order to exchange order (UNDOINSP), or the inventory may be returned to the vendor (RTNVEN). This report helps you review changes in the total spares count and the nominal value of rotable stock for the reporting period that you specify.

To run this report, select the Purchases and Returns from your role menu.

Specifications

The report contains the following parameters:

> **Note** Bold fields are mandatory.

- **Start Date**: The start date and time of the report period.
- **End Date**: The end date and time of the report period.

Report Detail

The following table lists the report fields along with their description and location in CAMO.

Report Field/ Column name	Description	Maintenix UI page	Maintenix UI field
Date	Transaction date	N/A	N/A
Part Number	The part number	Part Details	OEM Part Number
Serial Number	Inventory serial number	Inventory Details	Serial No
Inv Owner	The inventory owner	Inventory Details	Owner
Account	The Charge To Account (the part asset account)	Part Details > Details tab > Financial area	Asset Account
Type	The rotable adjustment transaction type code	Transaction Details	Transaction Type
System Note	The system note	Transaction Details > Details area	Description
Vendor	The vendor code	PO Details	Vendor
Order	The order number	PO Details	Order Number
Invoices	The invoice number	PO Invoice Details	PO Invoice Number
Qty	The transaction quantity	N/A	N/A
Price	The part unit price	Part Details > Details > Financial area	Average Price

Related tasks

Generate financial and invoicing reports

Rotable Adjustment Exchange and Repair Orders report

The Exchange and Repairs Orders report shows the EXCHRCVD and RCVREP transactions for exchange and repair orders where the part numbers of parts sent out are different from the part numbers of parts received. For the reporting period that you specify, this report helps you review changes in the total spares count and the nominal value of rotable stock.

Changes in part number can occur when:

- An exchange order is fulfilled with an alternate part from a part group.

- A part number sent for repair is transformed through a modification task definition. Its part number changes to the number of an alternate part.

To run this report, select **Exchange and Repairs Orders** from your role menu.

Specifications

The report contains the following parameters:

> **Note** Bold fields are mandatory.

- **Start Date** The start date and time of the report period.
- **End Date**: The end date and time of the report period.

Report Detail

The following table lists the report fields along with their description and location in CAMO.

Report field/ column name	Description	Maintenix UI page	Maintenix UI field
Date	Transaction date	N/A	N/A
Part Number	The part number	Part Details	OEM Part Number
Serial	Inventory serial number	Inventory Details	Serial No
Inv Owner	The inventory owner	Inventory Details	Owner
Account	The Charge To Account	Part Details > Details tab	Asset Account
Type	The rotable adjustment transaction type code	N/A	N/A
Order No	The internal order number	PO Details	Order Number
Invoices	The internal invoice number	PO Invoice Details	PO Invoice Number
Qty	The transaction quantity	Exchange Order Details	N/A

Report field/ column name	Description	Maintenix UI page	Maintenix UI field
Price	The part unit price	Part Details	Average Price at Receipt

Related tasks

Generate financial and invoicing reports

Rotable Adjustment Archive and Owner Change report

The Archive and Owner Change report shows additions and removals of rotable spares inventory through the ARCHIVE, UNARCH, and CHGOWN transaction types that occur when inventory is archived, unarchived, or changes ownership. For the reporting period that you specify, this report helps you review changes in the total spares count and the nominal value of rotable stock.

To run this report, select **Archive and Owner Change** from your role menu.

Specifications

The report contains the following parameters:

> **Note** Bold fields are mandatory.

- **Start Date** The start date and time of the report period.
- **End Date**: The end date and time of the report period.

Report Detail

The following table lists the report fields along with their description and location in CAMO.

Report Field/ Column name	Description	Maintenix UI page	Maintenix UI field
Date	Transaction date	N/A	N/A
Part Number	The part number	Part Details	OEM Part Number
Serial Number	Inventory serial number	Inventory Details	Serial No

Report Field/ Column name	Description	Maintenix UI page	Maintenix UI field
Account	The Charge To Account (the part asset account)	Part Details > Details tab > Financial area	Asset Account
Reason	The adjustment reason	N/A	N/A
Type	The rotable adjustment transaction type code	N/A	N/A
HR	The human resources name	N/A	N/A
Qty	The transaction quantity	N/A	N/A
System Note	The system note	N/A	N/A
Price	The part unit price	Part Details > Details tab > Financial area	Average Price

Related tasks

Generate financial and invoicing reports

Rotable Adjustment Create, Scrap, and Adjust Quantity Transactions report

The Create, Scrap and Adjust Quantity Transactions report shows additions and removals of rotable spares inventory through the CRTINV, SPARESQTYADJ, SCRAP, and UNSCRAP transactions. These transactions occur when rotable inventory is created or scraped, or when the number of spares for a rotable part is changed. For the reporting period that you specify, this report helps you review changes in the total spares count and the nominal value of rotable stock.

To run this report, select **Create and Scrap Transactions** from your role menu.

Specifications

The report contains the following parameters:

> **Note** Bold fields are mandatory.

- **Start Date** The start date and time of the report period.

- **End Date**: The end date and time of the report period.

Report Detail

The following table lists the report fields along with their description and location in CAMO.

Report Field/ Column name	Description	Maintenix UI page	Maintenix UI field
Date	Transaction date	N/A	N/A
Part Number	The part number	Part Details	OEM Part Number
Serial Number	Inventory serial number	Inventory Details	Serial No
Account	The Charge To Account	Part Details > Details tab > Financial area	Asset Account
Type	The rotable adjustment transaction type code	N/A	N/A
HR	The human resources name	N/A	N/A
System Note	The system note	N/A	N/A
User Note	The user note	N/A	Note
Qty	The transaction quantity	N/A	N/A
Price	The current Average Price at Receipt for the part.	Part Details > Details tab > Financial area	Average Price at Receipt

Related tasks

Generate financial and invoicing reports

Rotable Adjustment Price Adjustment report

The Price Adjustment report shows adjustments to the Average Price at Receipt (ARP) for rotable parts, and summarizes dollar value delta between the previous price and the adjusted price.

For the reporting period that you specify, this report can help explain changes in the total cost of rotable stock.

To run this report, select **Price Adjustment** from your role menu.

Specifications

The report contains the following parameters:

> **Note** Bold fields are mandatory.

- **Start Date** The start date and time of the report period.
- **End Date**: The end date and time of the report period.

Report Detail

The following table lists the report fields along with their description and location in CAMO.

Report Field/ Column name	Description	Maintenix UI page	Maintenix UI field
Date	Transaction date	N/A	N/A
Part Number	The part number	Part Details	OEM Part Number
HR	The human resources name	N/A	N/A
Account	The Charge To Account	Account Details	Account Name
System Note	The system note	N/A	N/A
Qty	The transaction quantity	N/A	N/A
Delta	The difference between the old and the adjusted part unit price	N/A	N/A
Qty*Delta	The quantity multiplied by the delta	N/A	N/A

Related tasks

Generate financial and invoicing reports

Create CAMO reports

CAMO reports provide access to information for the purpose of review, verification, and compliance.

About this task

CAMO can provide reports on a wide variety of items. Depending on the type of report, CAMO will do one of the following:

- Generate the report. For example, the Functional Access report.
- Prompt you to enter appropriate values and generate the report. For example, the Department Member list.
- Log into Jaspersoft and the report will generate in Jaspersoft. For example, the Financial Inventory Stock report.
- Log into Jaspersoft, prompt for parameters, and generate the report in Jaspersoft. For example, the Summary Financial report.

In addition, you can use the Business Intelligence menu item to log in to Jaspersoft directly and click on a report to generate.

To create a report that will be generated in Jaspersoft, complete the following. Based on your role and authority, the reports you can access may differ.

Steps

1. Click the down arrow beside the CAMO logo; then select the report to run.

   For reports other than those on the Business Intelligence menu item, go to step 3.
2. Click the Business Intelligence menu item:
   a) On the Jaspersoft report page, enter your user name and password if required.
   b) On the Jaspersoft report page, click the view list under Reports.
   c) On the Reports page, click the report to generate.
3. On the Input Controls page, enter the parameters to generate the report and click OK.

Generate financial and invoicing reports

From CAMO, you can run various financial and invoicing reports that are rendered through Jaspersoft in various formats.

Steps

1. Go to your to-do list.

2. Click the down arrow next to the CAMO logo, select your role, and choose the report to generate.
   A Jaspersoft Input Controls dialog box opens.
3. In the Input Controls dialog box, do one of the following:
   - If you selected a financial report, click the calendar icons in the dialog box to select the report start and end dates, (enter any other required information), and click OK.
   - If you selected an invoicing report, enter the complete or partial name of the project, and click Apply or OK.

Related concepts

Summary financial log report
Detailed Financial Log Report
Raised orders by account report
Rotable Adjustment Purchases and Returns report
Rotable Adjustment Exchange and Repair Orders report
Rotable Adjustment Archive and Owner Change report
Rotable Adjustment Create, Scrap, and Adjust Quantity Transactions report
Rotable Adjustment Price Adjustment report

Refresh a report with the most recent data

Prerequisite

- You have a generated report visible in Jaspersoft.

About this task

After generating an CAMO report in Jaspersoft report server, you can refresh that report so that it includes the most recent data.

Steps

To the right of the report title bar, click Refresh Report With Latest Data.
Jaspersoft queries the database and refreshes your report.

Export report data

Prerequisite

- You have generated a report in Jaspersoft.

About this task

After generating an CAMO report using the Jaspersoft report server, you can export the data to several formats, including PDF, CSV, Excel, and more.

Steps

Click Export and select an export format.

This downloads the data in the selected file format, which you can use to further analyze and edit the data to create the project invoice.

ABOUT IFS

IFS develops and delivers enterprise software for customers around the world who manufacture and distribute goods, maintain assets, and manage service-focused operations. The industry expertise of our people and solutions, together with commitment to our customers, has made us a recognized leader and the most recommended supplier in our sector. Our team of 3,500 employees supports more than 10,000 customers world-wide from a network of local offices and through our growing ecosystem of partners.

#forthechallengers

ifs.com

WHERE WE ARE

AMERICAS

+1 888 437 4968

ASIA PACIFIC

+65 63 33 33 00

EUROPE EAST

+48 22 577 45 00

EUROPE CENTRAL

+49 9131 77 340

UK & IRELAND

+44 1494 428 900

FRANCE, BENELUX AND IBERICA

+33 3 89 50 72 72

MIDDLE EAST AND AFRICA

+971 4390 0888

NORDICS

+46 13 460 4000

COPYRIGHT © 2026 INDUSTRIAL AND FINANCIAL SYSTEMS, IFS AB. IFS AND ALL IFS PRODUCTS AND SERVICES NAMES ARE TRADEMARKS OF IFS. ALL RIGHTS RESERVED. THIS DOCUMENT MAY CONTAIN STATEMENTS OF POSSIBLE FUTURE FUNCTIONALITY FOR IFS'S PRODUCTS AND TECHNOLOGY. SUCH STATEMENTS ARE FOR INFORMATION PURPOSES ONLY AND SHOULD NOT BE INTERPRETED AS ANY COMMITMENT OR REPRESENTATION. THE NAMES OF ACTUAL COMPANIES AND PRODUCTS MENTIONED HEREIN MAY BE THE TRADEMARKS OF THEIR RESPECTIVE OWNERS.